SMW AUTOBLOK

TURNING 17E

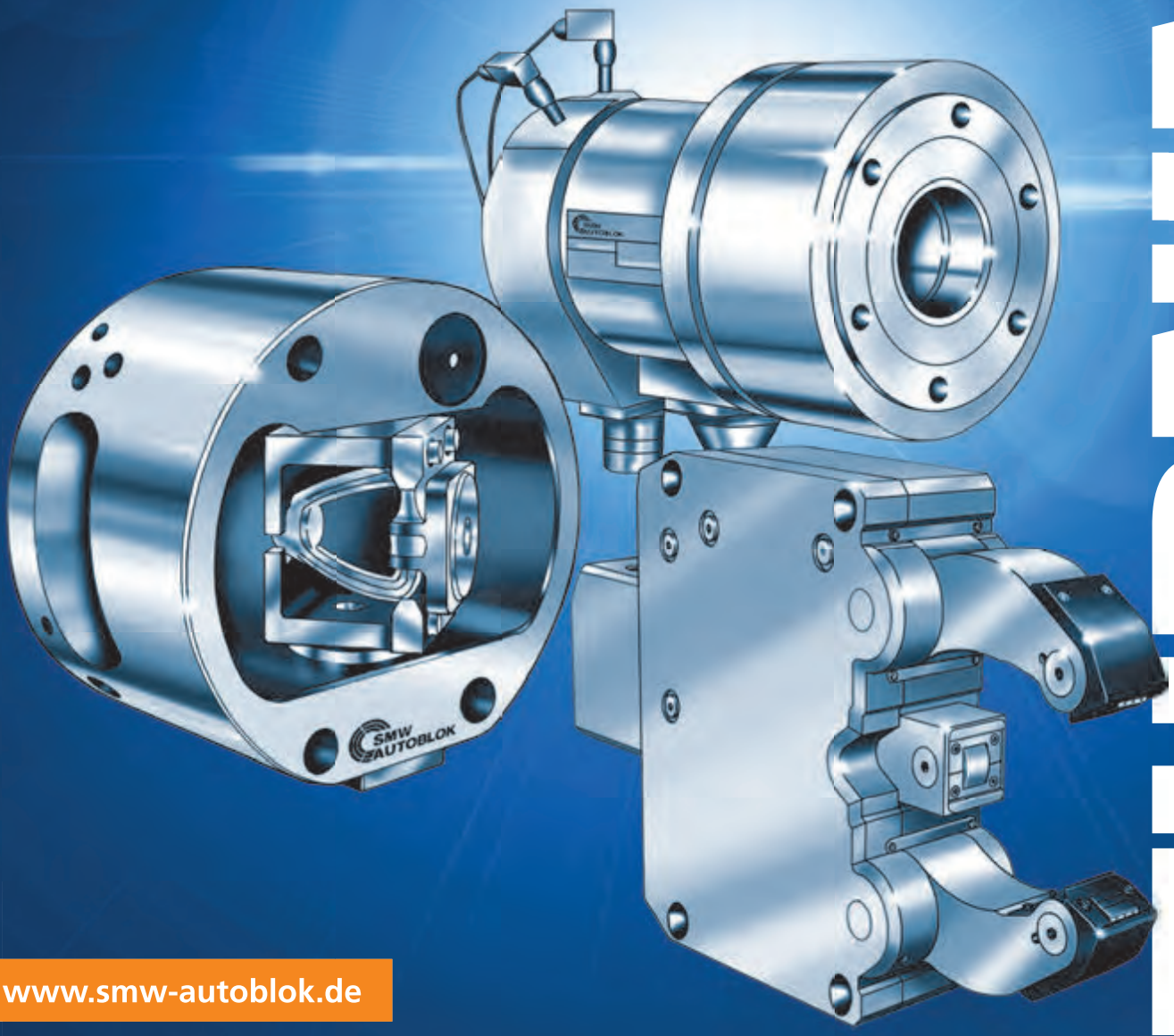

www.smw-autoblok.de

SMW-AUTOBLOK worldwide

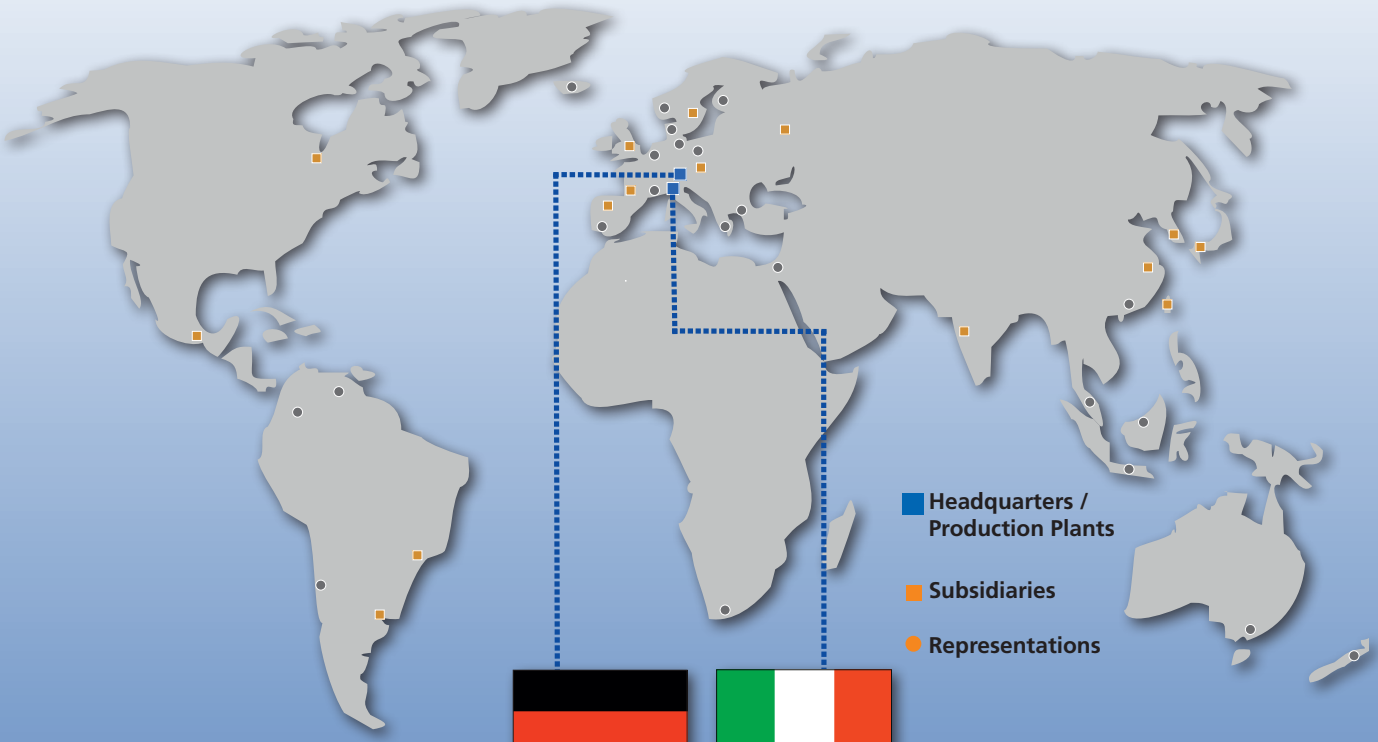

SMW-AUTOBLOK manufacturing plant Meckenbeuren
Development | Manufacturing | Sales | Service | Support

AUTOBLOK manufacturing plant Caprie-Torino

Visit our website: www.smw-autoblok.de

Latest product catalogues | Product innovations | Worldwide contact data | Tutor: Customer section

Free web applications: Jaw Finder | D-Vario Configurator | Update GFT-X 4.0

0 Manual chucks 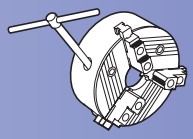 Page 7

1 Closed center power chucks 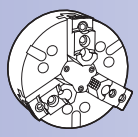 Page 39

2 Open center power chucks 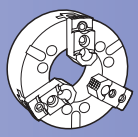 Page 85

3 Quick jaw change power chucks 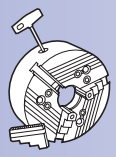 Page 109

4 Pull-down chucks ■ Compensating chucks
Indexing chucks ■ Shaft chucks
Column chucks ■ 6 jaw 2+2+2 chucks 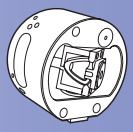 Page 147

5 Diaphragm chucks 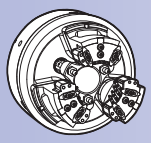 Page 213

6 Collet chucks ■ Bar pulling chucks 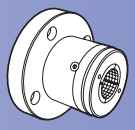 Page 233

7 Manual or power operated expanding mandrels
Adapter flanges 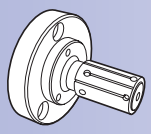 Page 249

8 Closed center cylinders ■ Open center cylinders
Double piston cylinders 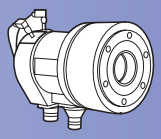 Page 259

9 Pneumatic/hydraulic front-end chucks
Control units 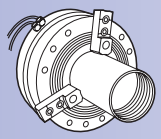 Page 279

10 Self-centering steady rests
for turning and grinding Page 321

11 Static chucks pneumatic / hydraulic 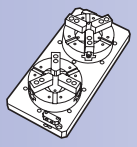 Page 369

12 Chuck switching system ■ Chuck flanges
Top jaws ■ T-nuts ■ Grippers
Gripping force meter ■ Grease ■ Accessories 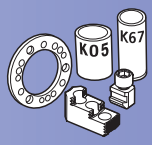

Page 387

Manual chucks

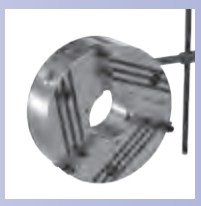

Page 8

HG-N
TONGUE & GROOVE
Jaw system original SMW

Manual chucks Ø 160 - 630 mm

- With through-hole – Quick jaw change
- 3 jaws

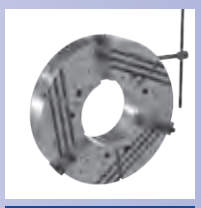

Page 14

HG-NB
TONGUE & GROOVE

Manual chucks Ø 800 - 1000 mm

- With extra large through-hole – Quick jaw change
- All existing top jaws can be used
- 3 jaws

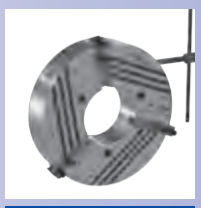

Page 18

HG-2G
TONGUE & GROOVE

Manual chucks Ø 400 - 630 mm

- With through-hole – Quick jaw change
- 3 jaws
- Lubrication channels in the jaw guide ways
- Mechanic sealed – low maintenance

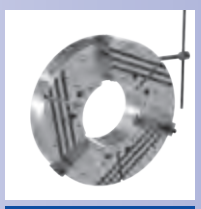

Page 24

HG-B-2G
TONGUE & GROOVE

Manual chucks Ø 800 - 1000 mm

- With extra large through-hole – Quick jaw change
- All existing top jaws can be used
- 3 jaws
- Mechanic sealed – low maintenance

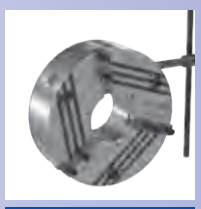

Page 28

HG-F
TONGUE & GROOVE
Jaw system FORKARDT

Manual chucks Ø 160 - 400 mm

- With through-hole – Quick jaw change
- 3 jaws

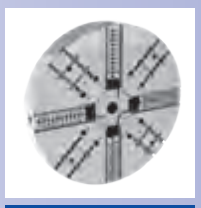

Page 34

PTF
TONGUE & GROOVE
Manual clamping and radial setting of jaws

High precision 4 jaws independent manual chucks Ø 1000 - 2000 mm

- Closed center
- 4 jaws

Page 36

JBX
Manual jaw box
Standard mounting dimensions

JBX-2G
Manual jaw box
with semi-finished body

High precision, resistance and power manual jaw box

- Accessory for face plates, 4 jaws independent manual or chucks
- Internal or external clamping

Quick jaw change

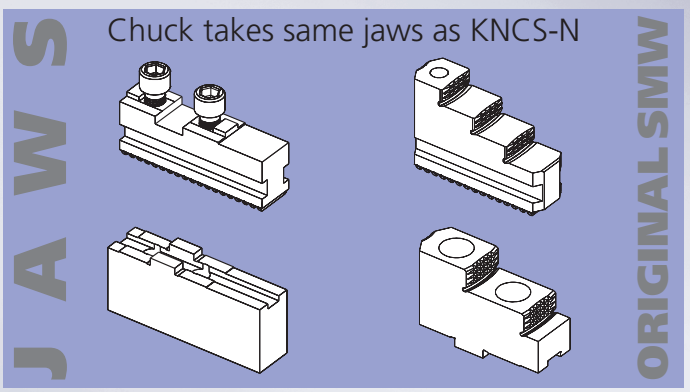

HG-N

- Jaw change in less than 1 minute

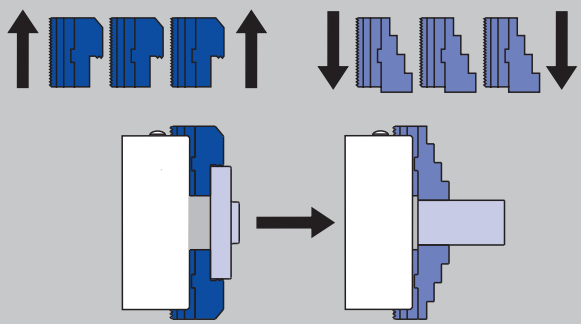

- Universal, because jaws can be radially adjusted and reversed = less jaw sets

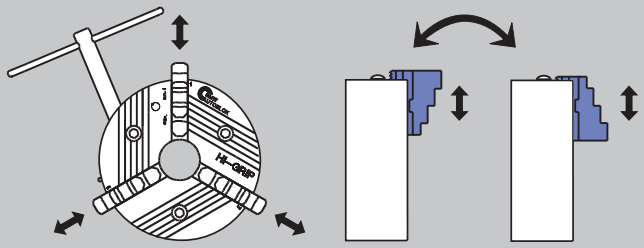

Jaws radially adjustable Jaws 180° reversed

For highest speeds
Flat gripping force curve

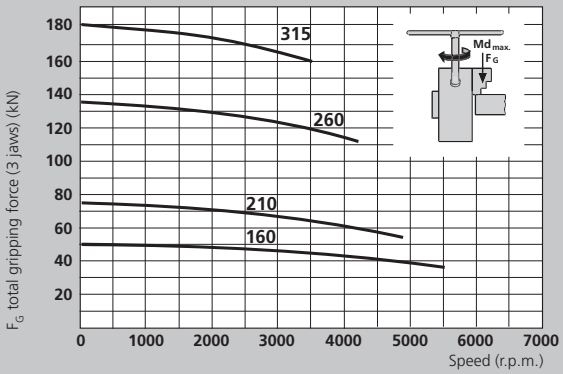

- The max. gripping force is the total, acting on the 3 jaws, obtained by applying to the chuck the max. allowed driving torque. The data refers to a chuck newly maintained accordingly to their service manual, using SMW K05 grease.

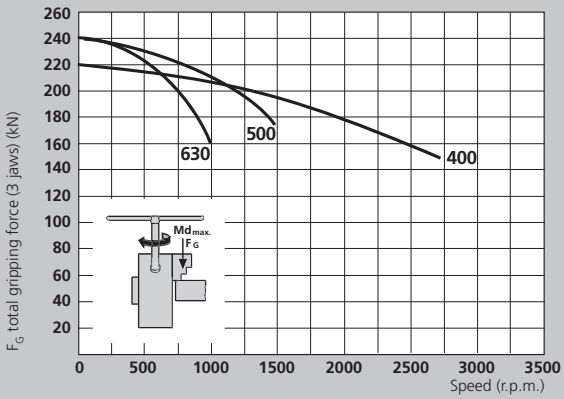

- The dynamic gripping forces have been measured using hardened standard stepped monoblock jaws type GST placed in a position not exceeding the outer diameter of the chuck.

⚠ **Safety advice/danger of damage:**
When using taller/havier jaws and/or clamping on a more external position reduce driving torque/rotating speed accordingly.

manual chuck HI-GRIP®

Direct mounting

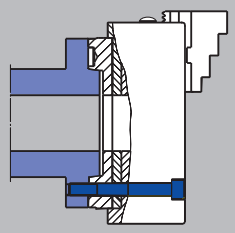

Recess and bolt circle to DIN 55026 / ISO-A 702/1

- No reboring of already machined jaws necessary, because of runout < 0.02 (e.g. HG-N 210)

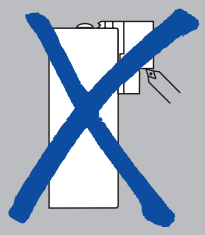

Wedge bar design guarantees highest precision, concentricity and repeatability as well as highest gripping forces

Safety jaw release with interlock

Jaw system SMW

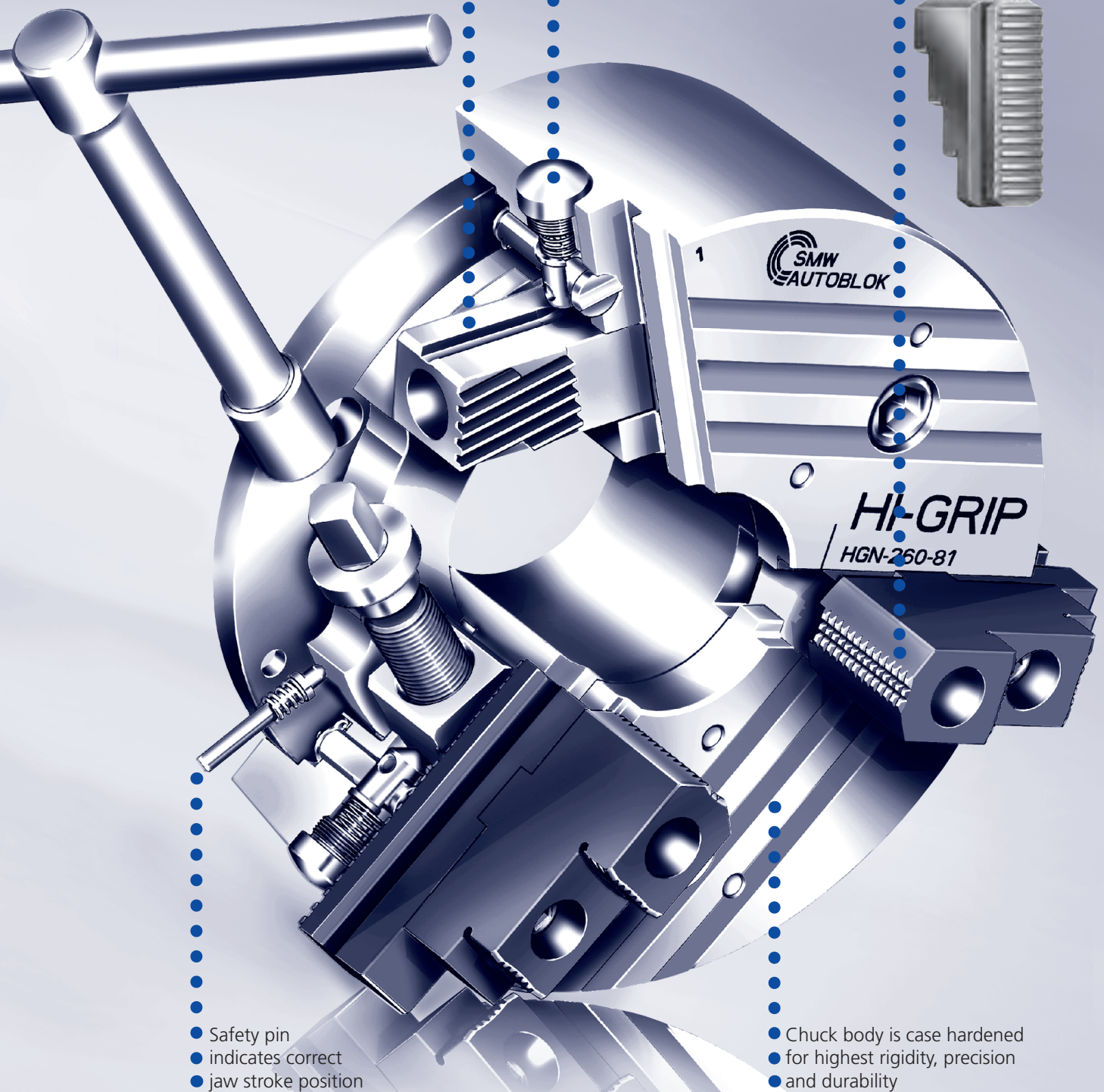

Safety pin indicates correct jaw stroke position

Chuck body is case hardened for highest rigidity, precision and durability

HG-N

QUICK JAW CHANGE
Jaw system original SMW

Manual chucks Ø 160 - 630 mm

Main dimensions and technical data

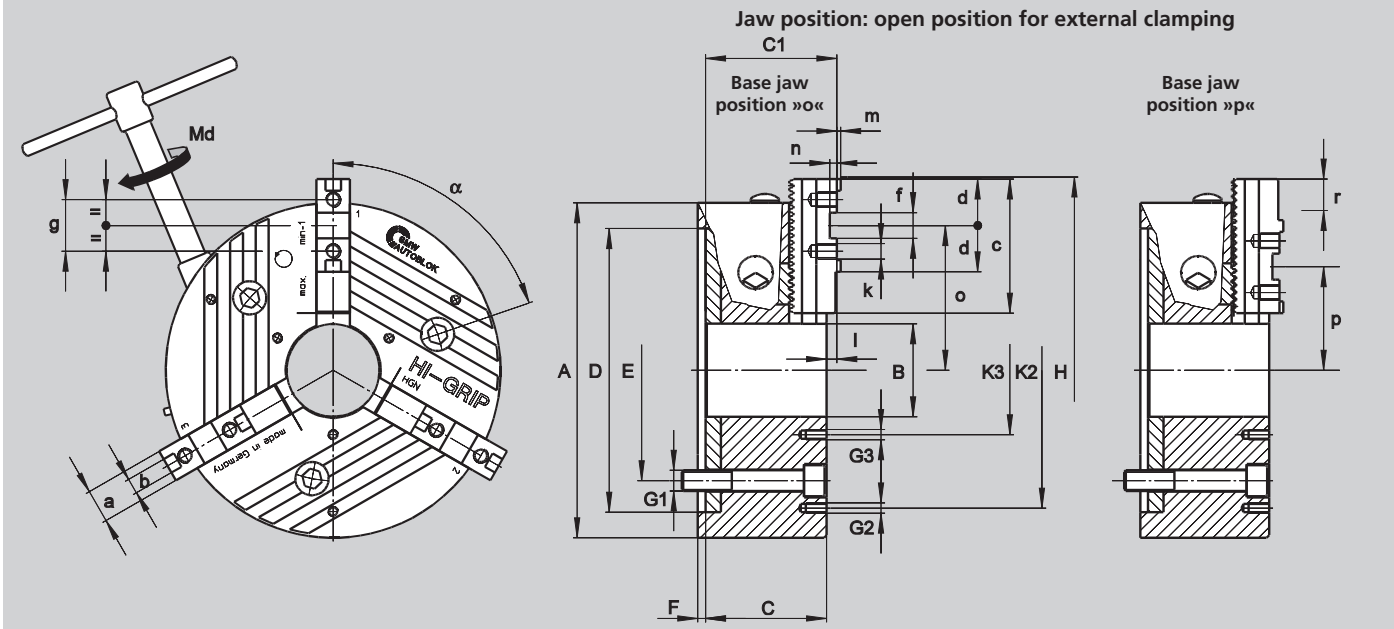

Subject to technical changes.
For more detailed information please ask our customer service.

SMW-AUTOBLOK Type HG-N		160-46	210-60	260-81	315-102	400-128	500-165	630-254
Mounting	**Size**	**Z140**	**Z170**	**Z220**	**Z300**	**Z380**	**Z380**	**Z380**
	A	165	210	260	315	400	500	630
	B	46	60	81	102	128	165	254
	C	64	85.5	93.7	110.8	125	136	143
	C1	71	90.4	102	120.1	134.3	146	153
H6	**D**	140	170	220	300	380	380	380
	E	104.8	133.4	171.4	235	330.2	330.2	330.2
	F	5	6	6	6	6	8	8
	G1	M10	M12	M16	M20	M24	M24	M24
	G2	-	M10/3 x 120°	M10/3 x 120°	M10/3 x 120°	M12/3 x 120°	M16/9 x 40°	M16/6 x 60°
	G3	M5/3 x 120°	M6/3 x 120°	M8/3 x 120°	M10/3 x 120°	M12/3 x 120°	M12/3 x 120°	M12/3 x 120°
Swing dia.	**H**	194	244	300	358	426	530	685
	K2	-	168	210	268	330	420	550
	K3	75	75	95	120	152	195	290
	α°	76	74	71	71	71	71	74
	β°	-	60	60	60	60	20	30
Master jaw		GBK 160	GBK 200	GBK 250	GBK 315	GBK 400	GBK 500	GBK 630
	a	20	22	26	32	32	45	45
f7	**b**	8	10	12	12	12	18	18
	c	65	85	104	115	125	160	200
	d	28	33	36	36	43	50	50
H7	**f**	18	20	20	20 (26)	26	30	30
	g	32	40	40	40 (54)	54	60	60
Thread/thread depth	**k**	M8/12	M8/13	M12/15	M12/17	M12/17	M16/34	M16/34
	l	6	4.9	8.3	9.3	9.3	10	10
	m	2.5	2.5	3	3	3	4	4
	n	5	4.5	5.5	6	7	9	9
Max./min.	**o**	69/51.2	88/64.5	112.4/79.4	141.3/102.8	168.8/113.8	211/141	291.5/200.5
Max./min.	**p**	59.3/40.5	69/45.5	80.6/47.6	97.3/58.8	129.8/74.8	150/80	191.5/100.5
Base jaw tooth pitch	**-**	4.7	4.7	5.5	5.5	5.5	7	7
Master jaw offset	**r**	18.8	23.5	33	38.5	55	70	91
Master jaw offset	teeth	4	5	6	7	10	10	10

Usable jaw stroke	mm	5.9	6.4	7.4	9.6	11.4	11.5	13
Max. total gripping force	kN	60	75	130	180	220	250	250
At max. torque Md	Nm	80	120	160	200	250	260	260
Speed	r.p.m.	5500	4800	4200	3500	2700	1500	1500
Weight without jaws	kg	8.3	19	32	53	103	161	270
Moment of inertia	kg·m²	0.03	0.09	0.25	0.60	1.9	4.5	12

Chuck with center mounting DIN 6350

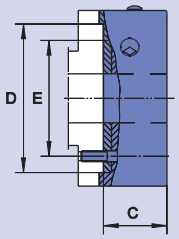

HG-N	160-46	210-60	260-81	315-102	400-128	500-165	630-254
Mounting	Z140	Z170	Z220	Z300	Z380	Z380	Z380
C	81	85.5	94	111	125	136	136
D	140	170	220	300	380	380	380
E	104.8	133.4	171.4	235	330.2	330.2	330.2
Chuck with GBK + WAK							
Id. No.	089310	089538	089550	089562	089574	089584	089708
Chuck with GST							
Id. No.	089312	089313	089317	089321	089325	089328	089709
Chuck with GBK + GUA							
Id. No.	089331	089539	089551	089563	089575	089585	089710

Chuck with ISO-A mounting DIN 55026

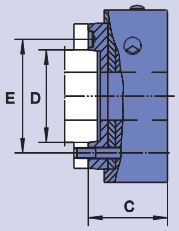

HG-N	160-46		210-60			260-81		315-102		400-128		500-165		630-254	
Mounting	A4	A5	A5	A6	A8	A6	A8	A8	A11	A11	A15	A11	A15	A11	A15
C	101	101	109.5	107.5	125.5	118	119	141	141	165	161	176	172	176	172
D	63.52	82.57	82.57	106.39	139.73	106.39	139.73	139.73	196.88	196.88	285.77	196.88	285.77	196.88	285.77
E	82.6	104.8	104.8	133.4	171.4	133.4	171.4	171.4	235.0	235.0	330.2	235.0	330.2	235.0	330.2
Chuck with GBK + WAK															
Id. No.	089332	089342	090458	089540	089542	089552	089554	089564	089566	089576	089578	089586	089588	089711	089713
Chuck with GST															
Id. No.	089962	089346	090459	089314	089315	089318	089319	089322	089323	089326	089327	089329	089330	089715	089732
Chuck with GBK + GUA															
Id. No.	089427	089434	090460	089541	089543	089553	089555	089565	089567	089577	089579	089587	089589	089749	089760

Chuck with bayonet mounting DIN 55027 Type C

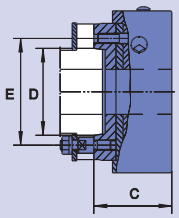

HG-N	160-46		210-60			260-81		315-102		400-128		500-165		630-254	
Mounting	C4	C5	C5	C6	C8	C6	C8	C8	C11	C11	C15	C11	C15	C11	C15
C	101	101	107.5	107.5	125.5	119	119	141	141	161	161	172	172	172	172
D	63.52	82.57	82.57	106.39	139.73	106.39	139.73	139.73	196.88	196.88	285.77	196.88	285.77	196.88	285.77
E	85	104.8	104.8	133.4	171.4	133.4	171.4	171.4	235.0	235.0	330.2	235.0	330.2	235.0	330.2
Chuck with GBK + WAK															
Id. No.	089464	089487	090461	089544	089546	089556	089558	089568	089570	089580	089582	089590	089592	089761	089762
Chuck with GST															
Id. No.	089488	089489	090462	089478	089479	089480	089476	089481	089482	089483	089484	089485	089486	089765	089766
Chuck with GBK + GUA															
Id. No.	089518	089519	090463	089545	089547	089557	089559	089569	089571	089581	089583	089591	089593	089786	089802

Chuck with Camlock mounting DIN 55029 Type S

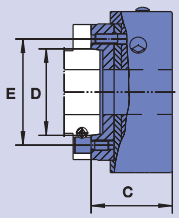

HG-N	160-46		210-60			260-81		315-102		400-128		500-165		630-254	
Mounting	S4	S5	S5	S6	S8	S6	S8	S8	S11	S11	S15	S11	S15	S11	S15
C	109	109	118.5	118.5	125.5	132	132	154	154	175	175	186	186	186	186
D	63.52	82.57	82.57	106.39	139.73	106.39	139.73	139.73	196.88	196.88	285.77	196.88	285.77	196.88	285.77
E	82.6	104.8	104.8	133.4	171.4	133.4	171.4	171.4	235.0	235.0	330.2	235.0	330.2	235.0	330.2
Chuck with GBK + WAK															
Id. No.	089520	089528	090464	089901	089905	089909	089913	089917	089921	089925	089929	089933	089937	089803	089832
Chuck with GST															
Id. No.	089602	089663	089996	089899	089903	089907	089911	089915	089919	089923	089927	089931	089935	089843	089897
Chuck with GBK + GUA															
Id. No.	089668	089674	090466	089902	089906	089910	089914	089918	089922	089926	089930	089934	089938	089942	089955

Parts included: Fixing elements (screws resp. studs resp. camlock bolts)

HG-N

QUICK JAW CHANGE

Jaws

GBK
Hardened base jaws

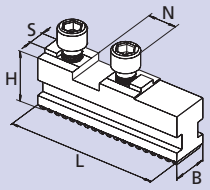

Chuck	HG-N 160	HG-N 210	HG-N 260	HG-N 315	HG-N 400	HG-N 500	HG-N 630
Jaw type	GBK 160	GBK 200	GBK 250	GBK 315	GBK 400	GBK 500	GBK 630
Id. No.	012439	012440	012441	012442	012443	012444	012445
B	20	22	26	32	32	45	45
H	27.5	29.5	37	43	43	57	57
L	65	85	104	115	125	160	200
N	18	20	20	20	26	30	30
S	8	10	12	12	12	18	18
kg/set	0.7	1.0	1.8	2.7	3.0	7.1	9.0

WAK
Soft top jaws

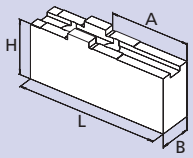

Chuck	HG-N 160	HG-N 210	HG-N 260	HG-N 315	HG-N 400	HG-N 500	HG-N 630
Jaw type	WAK 160-10	WAK 200-10	WAK 250-10	WAK 250-10	WAK 400-10	WAK 500-10	WAK 500-10
Id. No.	012491	012492	012493	012493	012494	012495	012495
B	20	22	30	30	35	50	50
H	35.5	42	50	50	54	75.5	75.5
L	85	105	125	125	145	180	180
A	42	50	70	70	74	100	100
kg/set	1.2	2.0	3.6	3.6	5.8	13.7	13.7

WAKS
Wide soft top jaws

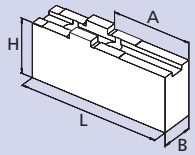

Chuck	HG-N 160	HG-N 210	HG-N 260	HG-N 315	HG-N 400	HG-N 500	HG-N 630
Jaw type	WAKS 140-10	WAKS 200-30	WAKS 250-20	WAKS 250-30	WAKS 400-30	WAKS 500-30	WAKS 500-30
Id. No.	012496	012497	012498	012499	012500	012501	012501
B	35	40	60	80	80	90	90
H	35.5	36	55	55	64	73	73
L	63	70	90	90	100	130	130
A	25	27	44	44	44	65	65
kg/set	1.5	1.9	6.2	8.5	11.0	16.4	16.4

UVB
Soft monoblock jaws

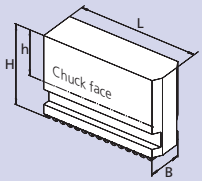

Chuck	HG-N 160	HG-N 210	HG-N 260	HG-N 315	HG-N 400	HG-N 500	HG-N 630
Jaw type	UVB 160	UVB 200	UVB 250	UVB 315	UVB 400	UVB 500	UVB 630
Id. No.	012447	012448	012449	012450	012451	012452	012453
B	20	22	26	32	32	45	45
H	60	70	90	100	100	134	134
h	39.4	45	61	66	66	87	87
L	69	83	108	119	146.5	175	230
kg/set	1.8	2.8	5.5	8.2	10	23	30

GST
Hardened stepped monoblock jaws

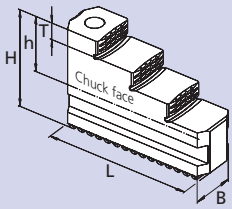

Clamping ranges

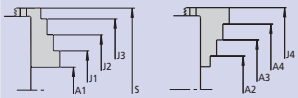

Chuck	HG-N 160	HG-N 210	HG-N 260	HG-N 315	HG-N 400	HG-N 500	HG-N 630
Jaw type	GST 170	GST 210	GST 260	GST 315	GST 400	GST 500	GST 500
Id. No.	035867	035863	037623	012457	012458	012459	012459
B	20	22	26	32	32	45	45
H	43.5	51	60	66	70	93	93
h	23	26	31	32	36	46	46
L	65	84	100	117	137	175	175
T	7	8	10	10	11	20	20
kg/set	0.7	1.3	1.9	3.4	4.4	11.7	11.7
A1	6-59	10-96	10-98	20-115	53-173	65-195	153-313
A2	42-89	56-130	62-150	85-180	116-238	160-285	241-401
A3	73-120	96-170	111-200	140-235	184-308	310-435	391-551
A4	104-151	136-210	161-250	195-290	252-378	-	-
J1	44-78	70-147	63-149	80-170	118-243	-	-
J2	74-110	109-187	112-199	135-225	186-310	170-295	254-414
J3	105-141	149-228	161-249	190-282	253-378	320-445	404-564
J4	135-182	186-260	212-300	255-350	328-448	-	-
S	198	244	303	350	456	540	660

JAWS-CATALOG

Request or download:
www.smw-autoblok.de

HG-N

QUICK JAW CHANGE

GUA
Hardened reversible stepped top jaws

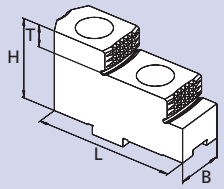

Clamping ranges

Base jaw position "o"

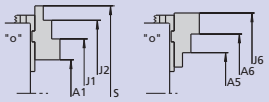

Base jaw position "p"

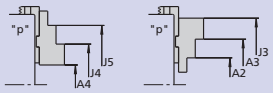

Chuck	HG-N 160	HG-N 210	HG-N 260	HG-N 315	HG-N 400	HG-N 500	HG-N 630
Jaw type	GUA 160	GUA 200	GUA 250	GUA 250	GUA 400	GUA 500	GUA 500
Id. No.	012484	012485	012486	012486	012487	012488	012488
B	20	22	30	30	36	45	45
H	36.5	38	50	50	56	70	70
L	63	72	90	90	105	130	130
T	7.5	10	14	14	15	20	20
kg/set	0.6	0.8	1.9	1.9	3.2	10.8	10.8
A1	32-69	55-111	73-161	120-205	138-258	150-308	265-469
A2	60-98	69-125	45-101	48-120	78-188	37-181	58-262
A3	85-123	96-152	125-181	130-200	186-298	144-302	179-383
A4	13-51	17-73	20-97	36-188	60-183	33-191	65-269
A5	78-116	104-163	76-165	120-205	143-268	143-301	258-462
A6	103-141	131-190	156-245	205-285	253-378	264-422	379-583
J1	91-129	117-174	152-240	202-285	218-338	259-417	374-578
J2	116-154	144-201	233-321	280-365	328-448	380-538	495-699
J3	144-181	158-215	204-259	208-280	263-380	253-411	288-492
J4	74-111	80-136	101-177	110-200	138-263	139-297	174-378
J5	99-136	107-163	180-257	198-280	248-373	260-418	295-499
J6	162-200	193-253	235-323	276-365	333-458	373-531	488-692
S	198	196-253/255	333	390	-	570	732

JAWS-CATALOG

Request or download: www.smw-autoblok.de

Important for maintenance and safe operation, to be ordered with the chuck

Grease K05®

Special grease for manual and power chucks

Cartridge 14 Oz. (DIN 1284)
Grease content 500 g
Id. No. 016440

Can 1000 g
Id. No. 011881

- High adhesion
- High resistance against coolant
- High load bearing capacity
- Low friction coefficient
- High gripping force
- Avoids tribocorrosion

Grease gun

Grease gun (DIN 1283) for cartridges 14 Oz. (DIN 1284)
■ Also refillable from grease can 1000 g

Lubrication set Id. No. 083726
Supply range
- Grease gun
- 1 Adapter flexible for high pressure grease nipple
- 1 Adapter for cone grease nipple

Fast changeover, fast payback:

The original quick jaw change manual chuck

HG-NB

EXTRA LARGE THROUGH HOLE

>> ALL EXISTING TOP JAWS CAN BE USED.

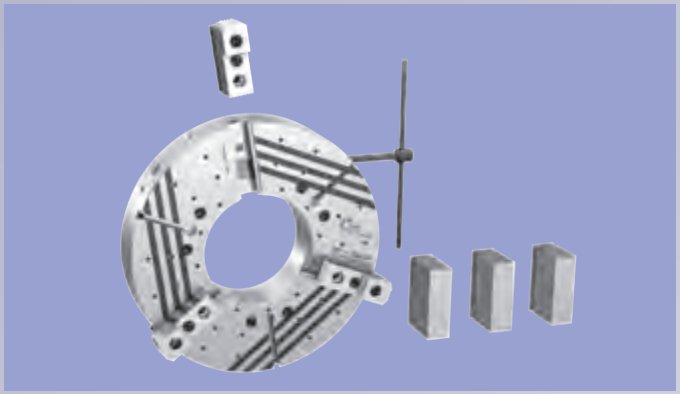

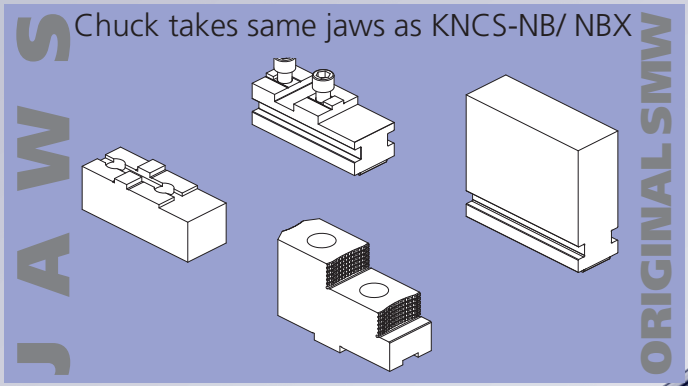

- Jaw change in less than 1 minute

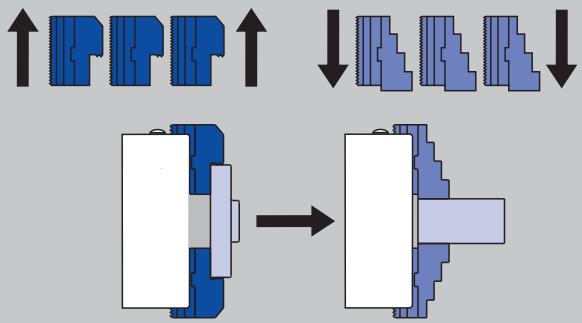

- Universal, because jaws can be radially adjusted and reversed = less jaw sets

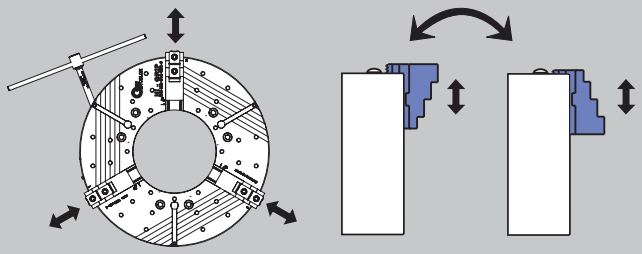

Jaws radially adjustable Jaws 180° reversed

For highest speeds
Flat gripping force curve

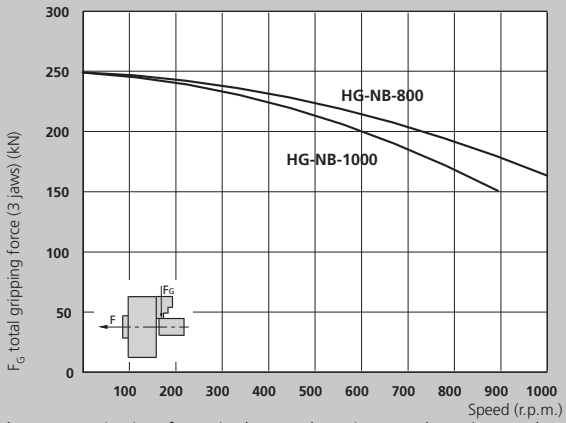

- The max. gripping force is the total, acting on the 3 jaws, obtained by applying to the chuck the max. allowed driving torque. The data refers to a chuck newly maintained accordingly to their service manual, using SMW K05 grease.
- The dynamic gripping forces have been measured using hardened standard stepped monoblock jaws placed in a position not exceeding the outer diameter of the chuck.

⚠ **Safety advice/danger of damage:**
When using taller/havier jaws and/or clamping on a more external position reduce driving torque/rotating speed accordingly.

Less costs by using all existing top jaws from:

- SMW-AUTOBLOK
- Autoblok
- Buck
- Forkardt
- Gamet
- Howa
- Kitagawa
- Logansport
- Mario Pinto
- Matsumoto
- Pratt Burnerd
- Röhm
- Rotomors
- Schunk
- Berg
- Woodworth

If your jaw type is not here, please ask us.

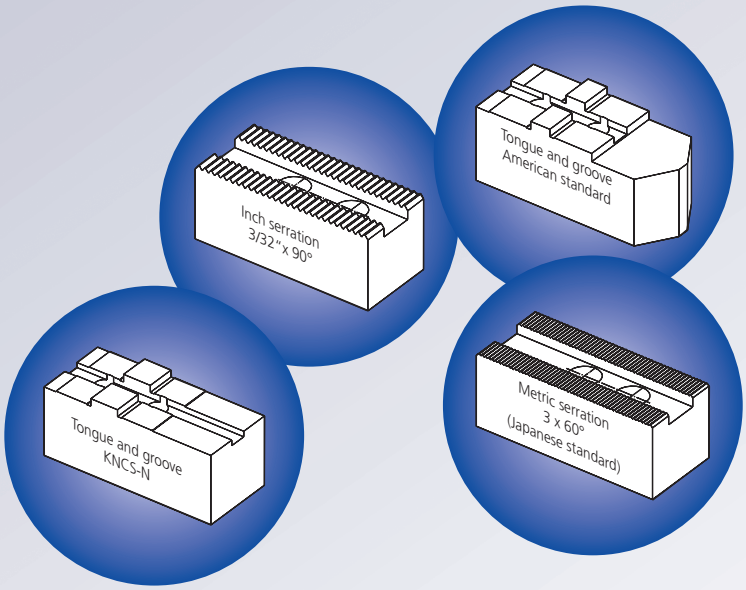

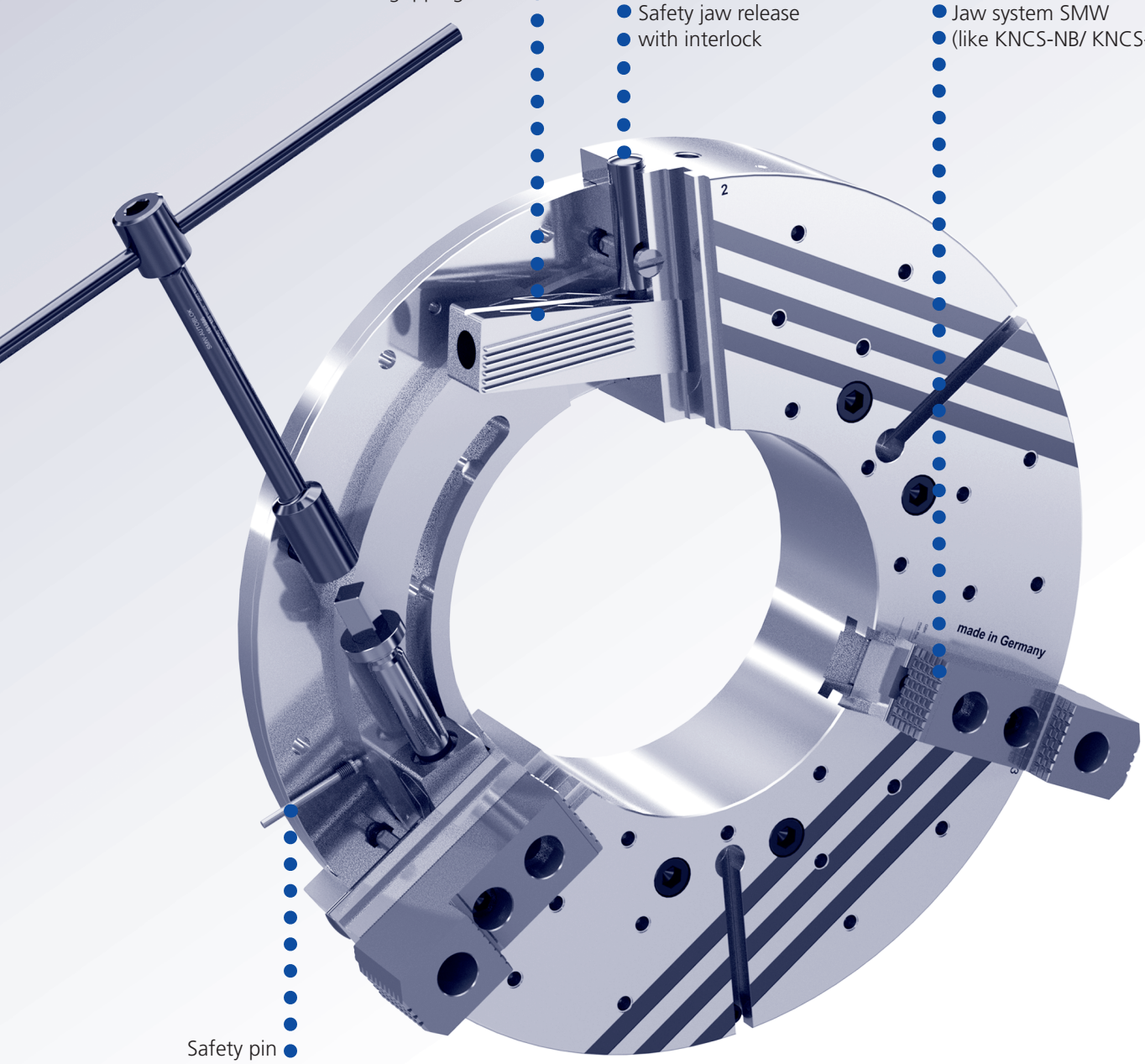

HG-NB

Manual chuck Ø 800 - 1000 mm

QUICK JAW CHANGE
Jaw system original SMW

Main dimensions and technical data

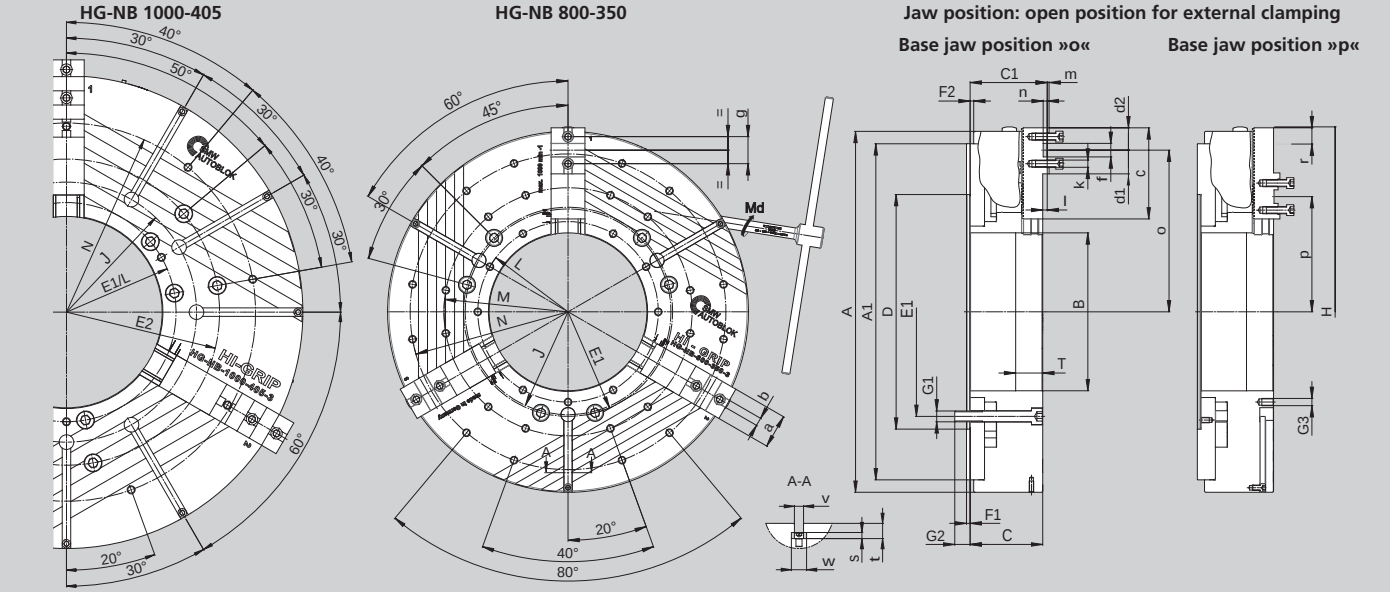

Subject to technical changes.
For more detailed information please ask our customer service.

SMW-AUTOBLOK Type HG-NB		800-350	1000-405
Mounting	**Size**	**Z520**	**Z720**
	A	800	1000
	A1	745	880
	B	350	405
	C	161	161
	C1	171	171
	D	520	720
	E1	463.6	463.6
	E2	-	647.6
	F1	8	8
	F2	8	8
	G1	M24 (6x)	M24 (12x)
	G2	34	34
Piston thread/depth	**G3**	M16 (33x) / 26	M16 (9x) / 25
Piston stroke	**H**	839	1070
	J	456	550
	L	400	463.6
	M	550	-
	N	700	800
	T	60	60
Base jaw	**-**	GBK-B 630	GBK-B 800
	a	75	75
	b	18	18
	c	202	286
	d1	52,5	113
	d2	49.5	50.5
	f	30	30
	g	60	60
	k	M16	M16
	l	10	10
	m	4	4
	n	9	9
Max./min.	**o**	368.4 / 277.4	478 / 303
Max./min.	**p**	265.4 / 174.4	293 / 118
Base jaw tooth pitch	**-**	7	7
Base jaw offset	**r**	91	175
Base jaw offset	teeth	13	25
	s	12	12
	t	30	30
H8	**v**	18	18
	w	30	30

Usable jaw stroke	mm	13	13.2
Max. total gripping force	kN	250	250
At max. torque Md	Nm	260	260
Speed	r.p.m.	1000	900
Weight without jaws	kg	475	745
Moment of inertia	kg·m²	45.5	109

HG-NB

QUICK JAW CHANGE
Wide master jaws

Ordering review

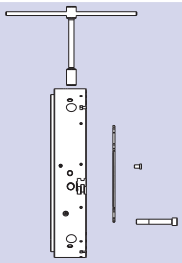

Spindle mounting \ Size	HG-NB 800-350	HG-NB 1000-450
Centering rim	Z520 161880	Z720 161910

Supply range
Chuck + actuation wrench + mounting bolts + 1 set of coverplates without base jaws

Base jaw type — GBK-B

TONGUE & GROOVE KNCS-N standard

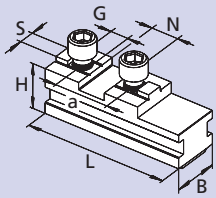

HG-NB	800-350	1000-450
Id. No.	035902	064604
B	75	75
H	57	57
L	202	286
N	30	30 (2x)
S	18	18
G (metric)	M16	M16
a	60	2 x 60

Existing top jaw

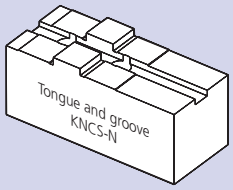

Base jaw type — GBK-BD

INCH SERRATED (for SMW-AUTOBLOK standard jaws)

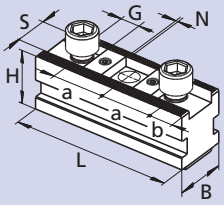

HG-NB	800-350	1000-450
Id. No.	036295	036296
B	75	75
H	61	61
L	202	286
N	3/32" x 90°	3/32" x 90°
S (ridge)	25.5	25.5
G	M20	M20
a	38 / 38 / 52 / 38	3x38 / 60.7 / 2x38
b	18	17.5

Existing top jaw

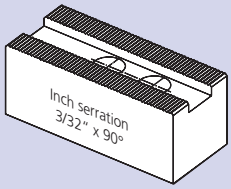

Base jaw type — GBK-BA

TONGUE & GROOVE American standard

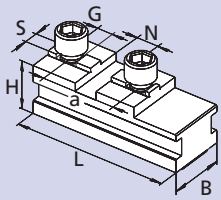

HG-NB	800-350	1000-450
Id. No.	060562	064590
B	75	75
H	57	57
L	202	286
N	19.02	19.02 (2x)
S	12.7	12.7
G (inch)	3/4-10	3/4-10
a	76.2	2 x 76.2

Existing top jaw

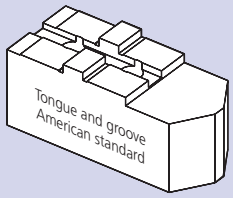

Base jaw type — GBK-BM

METRIC SERRATION

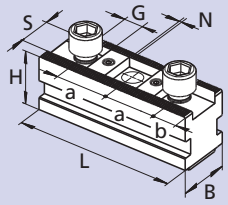

HG-NB	800-350	1000-450
Id. No.	035917	036708
B	75	75
H	61	61
L	202	286
N	3 x 60°	3 x 60°
S	25	25
G (metric)	M20	M20
a	2 x 60	60 / 60 / 70.5 / 60
b	18	17.5

Existing top jaw

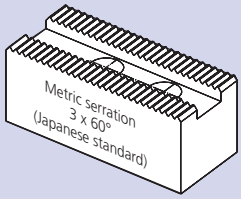

Jaw type — UVB-B

Soft wide monoblock jaws

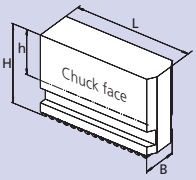

HG-NB	800/1000
Jaw type	UVB-B 630
Id. No.	5301060
B	75
H	160
h	105
L	230
kg/set	61.5

JAWS-CATALOG
Request or download:
www.smw-autoblok.de

NEW GENERATION

The sealed quick jaw change manual chuck

HG-2G

Customer Benefits

	HG-N	HG-2G
Minimized set up times due to the quick jaw change system	■	■
Highest accuracy of the jaw change	■	■
Universal	■	■
Case hardened parts	■	■
Wedge bar drive	■	■
Jaw safety interlock	■	■
Ideal for vertical mounting of chuck		■
Sealed wedge bars and base jaws		■
Optimized lubrication in the jaw guides		■
Low maintenance		■

Economic and Efficiency

Example: Maintenance costs at high accumulation of dirt / coolant

		HG-N	HG-2G
Lubrication interval		every shift	every 3rd shift
Required time for lubricating		10 Min.	10 Min.
Working days/year		230	230
Required time/year		2.300 Min.	767 Min.
Machine costs/hour		€ 60.–	€ 60.–
Total costs/year		€ 2.300.–	€ 767.–
Profit/year *	**at 1-shift operation**		**€ 1.533.–**
	at 2-shift operation		**€ 3.066.–**
	at 3-shift operation		**€ 4.599.–**

* Additionally the profit is increased by reducing the down time of the machine, as the 2G-chucks also need less disassembling for cleaning.

Clamping glossary

HG-2G: Evolution of the quick jaw change power chuck HG-N. The HG-2G features additional seals and an improved lubrication system for low maintenance. **The chuck still offers all the advantages same as the HG-N.**

The proven wedge bar drive guaranties unmatched accuracy and rigidity. A low loss of grip force due to centrifugal force makes the chuck ideal for high speed applications.

Sealing: The HG-2G is sealed by seals attached to both faces of the base jaws. Also the wedge bars are protected by mechanical seals. The seals **protect the chuck** against penetration of dirt and swarf.

Low Maintenance: The **lubrication system of the HG-2G is optimized**. Additional lubrication channels and grease pockets integrated in the jaw guide ways ensure constant clamping force. The lubrication intervals are significantly longer reducing down times and cost for maintenance.

Mass production: The sealing and the new lubrication system make the HG-2G also suitable for use on machining centers or turning and milling centers in vertical operation.

Compatibility: The HG-2G is interchangeable with the standard series of quick jaw change chucks HG-N. Existing master jaws still can be used without sealing. A small modification made to the master jaws and a **mounting kit** can upgrade existing master jaws to become 2G master jaws.

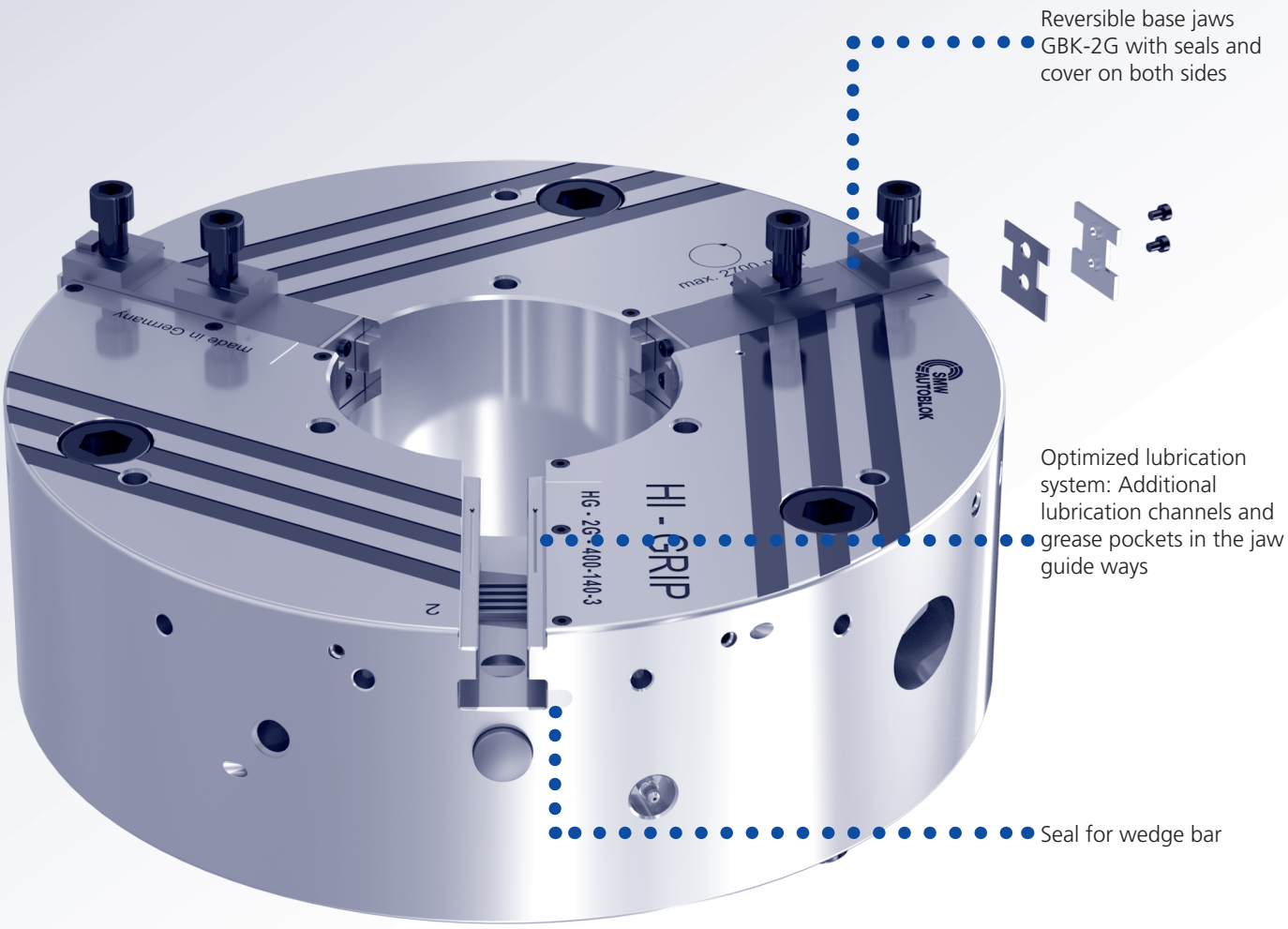

HG-2G

QUICK JAW CHANGE
Jaw system original SMW

Manual chucks Ø 400 - 630 mm

Main dimensions and technical data

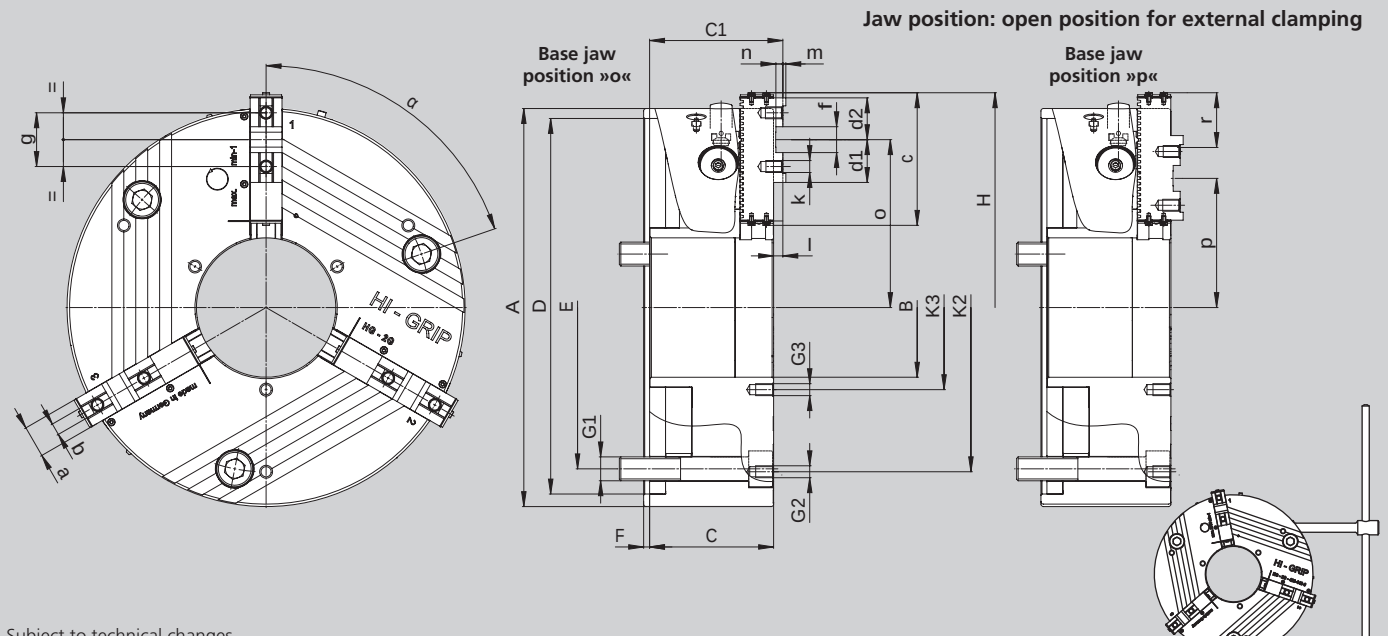

Subject to technical changes.
For more detailed information please ask our customer service.

SMW-AUTOBLOK Type HG-2G		400-140	500-165	630-254
Mounting	**Size**	**Z380**	**Z380**	**Z380**
	A	400	500	630
	B	140	165	254
	C	124.6	136	143
	C1	133.9	146	153
H6	**D**	380	380	380
	E	330.2	330.2	330.2
	F	6	8	8
	G1	M24	M24	M24
	G2	M12/3 x 120°	M16/9 x 40°	M16/6 x 60°
	G3	M12/3 x 120°	M12/3 x 120°	M12/3 x 120°
Swing dia.	**H**	432	on request	on request
	K2	330	420	550
	K3	165	195	290
	α°	71	71	74
Master jaw		GBK-2G 400	GBK-2G 500	GBK-2G 630
	a	32	45	45
f7	**b**	12	18	18
	c	133.2	167.7	209.7
	d1	43	53	53
	d2	42	48.25	49.7
H7	**f**	26	30	30
	g	54	60	60
Thread/thread depth	**k**	M12/17	M16/34	M16/34
	l	9.3	10	10
	m	3	4	4
	n	7	9	9
Max./min.	**o**	168.8/113.8	211/141	291.5/200.5
Max./min.	**p**	129.8/74.8	150/80	191.5/100.5
Base jaw tooth pitch	**-**	5.5	7	7
Master jaw offset	**r**	55	70	91
Master jaw offset	teeth	10	10	13
Usable jaw stroke	mm	8.5	11.5	13
Max. total gripping force	kN	220	250	250
At max. torque Md	Nm	250	260	260
Speed	r.p.m.	2700	1500	1000
Weight without jaws	kg	99	161	270
Moment of inertia	kg·m²	1.9	4.5	12

Further sizes on request.

Chuck with center mounting DIN 6350

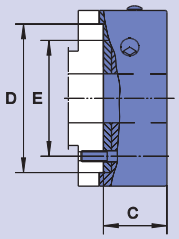

HG-2G	400-140	500-165	630-254
Mounting	Z380	Z380	Z380
C	125	136	136
D	380	380	380
E	330.2	330.2	330.2
Chuck with GBK-2G + WAK			
Id. No.	161729	161813	161827
Chuck with GBK-2G + GUA			
Id. No.	161800	161814	161828

Chuck with ISO-A mounting DIN 55026

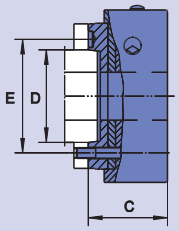

HG-2G	400-140		500-165		630-254	
Mounting	A11	A15	A11	A15	A11	A15
C	165	161	176	172	176	172
D	196.88	285.77	196.88	285.77	196.88	285.77
E	235.0	330.2	235.0	330.2	235.0	330.2
Chuck with GBK-2G + WAK						
Id. No.	161801	161807	161815	161821	161829	161835
Chuck with GBK-2G + GUA						
Id. No.	161802	161808	161816	161822	161830	161836

Chuck with bayonet mounting DIN 55027 Type C

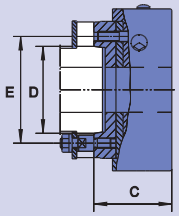

HG-2G	400-140		500-165		630-254	
Mounting	C11	C15	C11	C15	C11	C15
C	161	161	172	172	172	172
D	196.88	285.77	196.88	285.77	196.88	285.77
E	235.0	330.2	235.0	330.2	235.0	330.2
Chuck with GBK-2G + WAK						
Id. No.	161803	161809	161817	161823	161831	161837
Chuck with GBK-2G + GUA						
Id. No.	161804	161810	161818	161824	161832	161838

Chuck with Camlock mounting DIN 55029 Type S

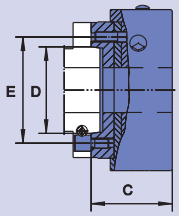

HG-2G	400-140		500-165		630-254	
Mounting	S11	S15	S11	S15	S11	S15
C	175	175	186	186	186	186
D	196.88	285.77	196.88	285.77	196.88	285.77
E	235.0	330.2	235.0	330.2	235.0	330.2
Chuck with GBK-2G + WAK						
Id. No.	161805	161811	161819	161825	161833	161839
Chuck with GBK-2G + GUA						
Id. No.	161806	161812	161820	161826	161834	161840

Parts included: Fixing elements (screws resp. studs resp. camlock bolts)
Further sizes on request.

HG-2G

QUICK JAW CHANGE

Jaws

GBK-2G
Hardened base jaws

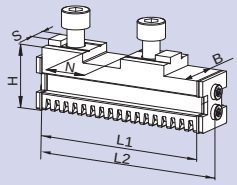

Chuck	HG-2G 400	HG-2G 500	HG-2G 630
Jaw type	GBK-2G 400	GBK-2G 500	GBK-2G 630
Id. No.	161605	161843	161846
B	32	45	45
H	43	57	57
L1	123	158	198
L2 *	133.2	168.2	208.2
N	26	30	30
S	12	18	18
kg/set	3.0	7.1	9.0

* Dimension incl. seals, cover and screws

WAK
Soft top jaws

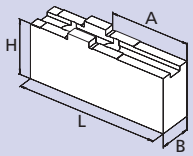

Chuck	HG-2G 400	HG-2G 500	HG-2G 630
Jaw type	WAK 400-10	WAK 500-10	WAK 500-10
Id. No.	012494	012495	012495
B	35	50	50
H	54	75.5	75.5
L	145	180	180
A	74	100	100
kg/set	5.8	13.7	13.7

WAKS
Wide soft top jaws

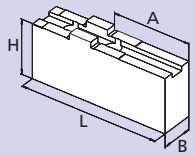

Chuck	HG-2G 400	HG-2G 500	HG-2G 630
Jaw type	WAKS 400-30	WAKS 500-30	WAKS 500-30
Id. No.	012500	012501	012501
B	80	90	90
H	64	73	73
L	100	130	130
A	44	65	65
kg/set	11.0	16.4	16.4

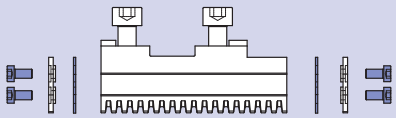

Seal Kit
for hardened base jaws GBK-2G
Consisting of seals (6 pcs.)
and mounting screws (12 pcs.)

HG-2G	400	500	630
Seal kit type	GBK-2G 400	GBK-2G 500	GBK-2G 630
Id. No.	205385	206915	206915

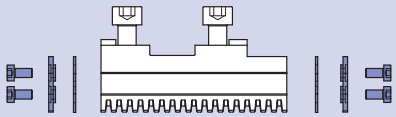

Mounting Kit
for hardened base jaws GBK-2G
Consisting of seals (6 pcs.), covers (6 pcs.)
and mounting screws (12 pcs.)

HG-2G	400	500	630
Mounting kit type	GBK-2G 400	GBK-2G 500	GBK-2G 630
Id. No.	205389	206916	206916

Advice: Existing master jaws still can be used without seals. A small modification made to the master jaws and a mounting kit can upgrade existing master jaws to become 2G master jaws (instruction for the rework on request).

JAWS-CATALOG

Request or download: www.smw-autoblok.de

HG-2G

QUICK JAW CHANGE

GUA
Hardened reversible stepped top jaws

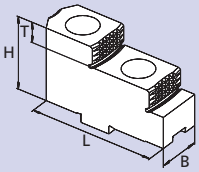

Clamping ranges

Base jaw position "o"

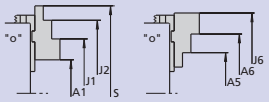

Base jaw position "p"

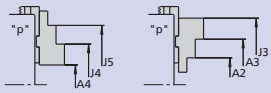

Chuck	HG-2G 400	HG-2G 500	HG-2G 630
Jaw type	GUA 400	GUA 500	GUA 500
Id. No.	012487	012488	012488
B	36	45	45
H	56	70	70
L	105	130	130
T	15	20	20
kg/set	3.2	10.8	10.8
A1	138-258	150-308	265-469
A2	78-188	37-181	58-262
A3	186-298	144-302	179-383
A4	60-183	33-191	65-269
A5	143-268	143-301	258-462
A6	253-378	264-422	379-583
J1	218-338	259-417	374-578
J2	328-448	380-538	495-699
J3	263-380	253-411	288-492
J4	138-263	139-297	174-378
J5	248-373	260-418	295-499
J6	333-458	373-531	488-692
S	-	570	732

JAWS-CATALOG

Request or download: www.smw-autoblok.de

Important for maintenance and safe operation, to be ordered with the chuck

Grease K05®

Special grease for manual and power chucks

Cartridge 14 Oz. (DIN 1284)
Grease content 500 g
Id. No. 016440

Can 1000 g
Id. No. 011881

- High adhesion
- High resistance against coolant
- High load bearing capacity
- Low friction coefficient
- High gripping force
- Avoids tribocorrosion

Grease gun

Grease gun (DIN 1283) for cartridges 14 Oz. (DIN 1284)
■ Also refillable from grease can 1000 g

Lubrication set Id. No. 083726
Supply range
- Grease gun
- 1 Adapter flexible for high pressure grease nipple
- 1 Adapter for cone grease nipple

NEW GENERATION

The sealed quick jaw change manual chuck

HG-B-2G

Customer Benefits

	HG-NB	HG-B-2G
Minimized set up times due to the quick jaw change system	■	■
Highest accuracy of the jaw change	■	■
Universal	■	■
Case hardened parts	■	■
Wedge bar drive	■	■
Jaw safety interlock	■	■
Ideal for vertical mounting of chuck		■
Sealed wedge bars and base jaws		■
Optimized lubrication in the jaw guides		■
Low maintenance		■

Economic and Efficiency

Example: Maintenance costs at high accumulation of dirt / coolant

		HG-NB	HG-B-2G
Lubrication interval		every shift	every 3rd shift
Required time for lubricating		10 Min.	10 Min.
Working days/year		230	230
Required time/year		2.300 Min.	767 Min.
Machine costs/hour		€ 60.–	€ 60.–
Total costs per year		€ 2.300.–	€ 767.–
Profit per year *	**at 1-shift operation**		**€ 1.533.–**
	at 2-shift operation		**€ 3.066.–**
	at 3-shift operation		**€ 4.599.–**

* Additionally the profit is increased by reducing the down time of the machine, as the 2G-chucks also need less disassembling for cleaning.

Clamping glossary

HG-B-2G: Evolution of the quick jaw change power chuck HG-NB. The HG-B-2G features additional seals and an improved lubrication system for low maintenance. **The chuck still offers all the advantages same as the HG-NB.**

The proven wedge bar drive guaranties unmatched accuracy and rigidity. A low loss of grip force due to centrifugal force makes the chuck ideal for high speed applications.

Sealing: The HG-B-2G is sealed by seals attached to both faces of the base jaws. Also the wedge bars are protected by mechanical seals. The seals **protect the chuck** against penetration of dirt and swarf.

Low Maintenance: The lubrication system of the HG-B-2G is optimized. Additional lubrication channels and grease pockets integrated in the jaw guide ways ensure constant clamping force. The lubrication intervals are significantly longer reducing down times and cost for maintenance.

Mass production: The sealing and the new lubrication system make the HG-B-2G also suitable for use on machining centers or turning and milling centers in vertical operation.

Compatibility: The HG-B-2G is interchangeable with the standard series of quick jaw change chucks HG-NB. Existing master jaws still can be used without sealing. A small modification made to the master jaws and a **mounting kit** can upgrade existing master jaws to become 2G master jaws.

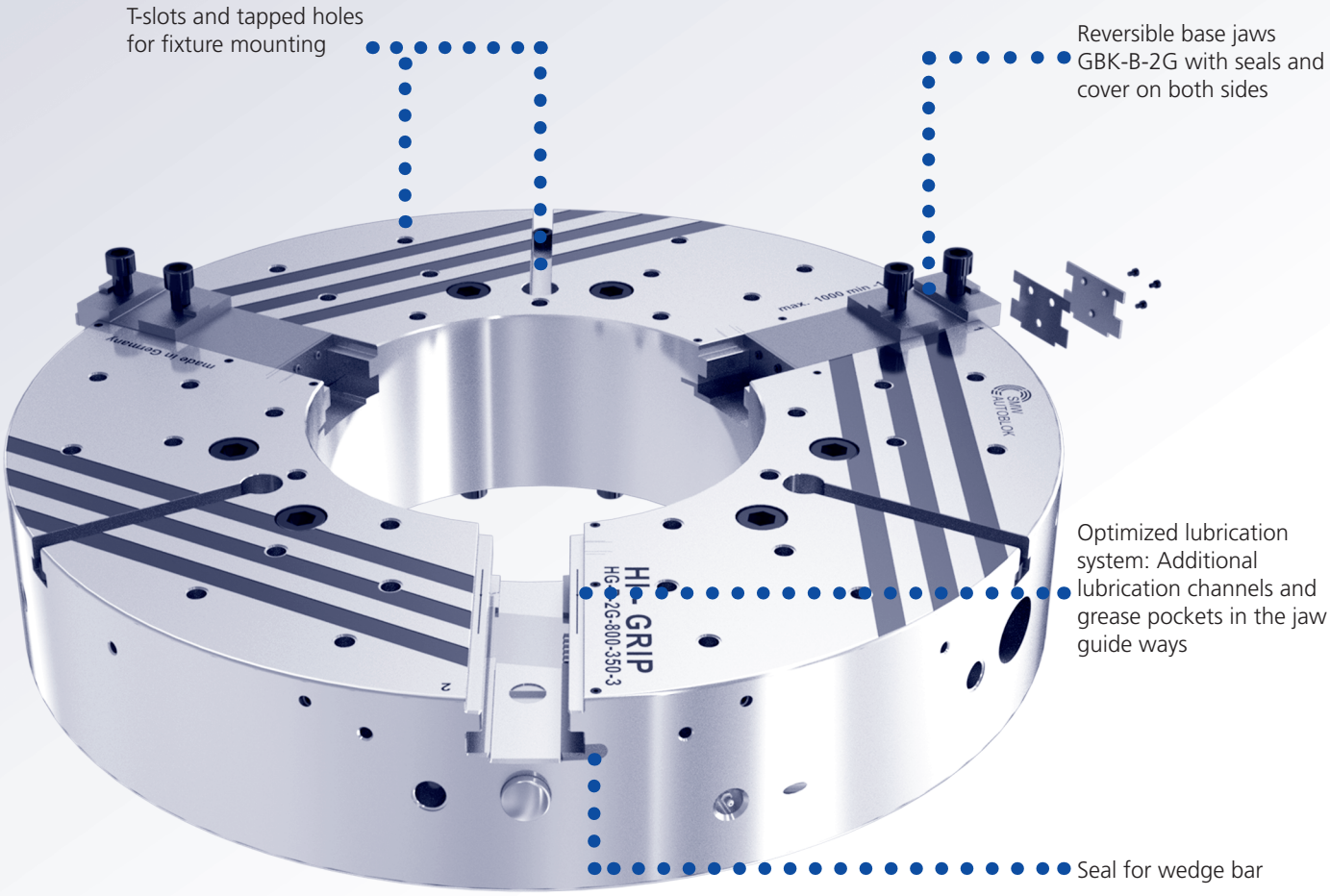

HG-B-2G

QUICK JAW CHANGE
Jaw system original SMW

Manual chuck Ø 800 - 1000 mm

Main dimensions and technical data

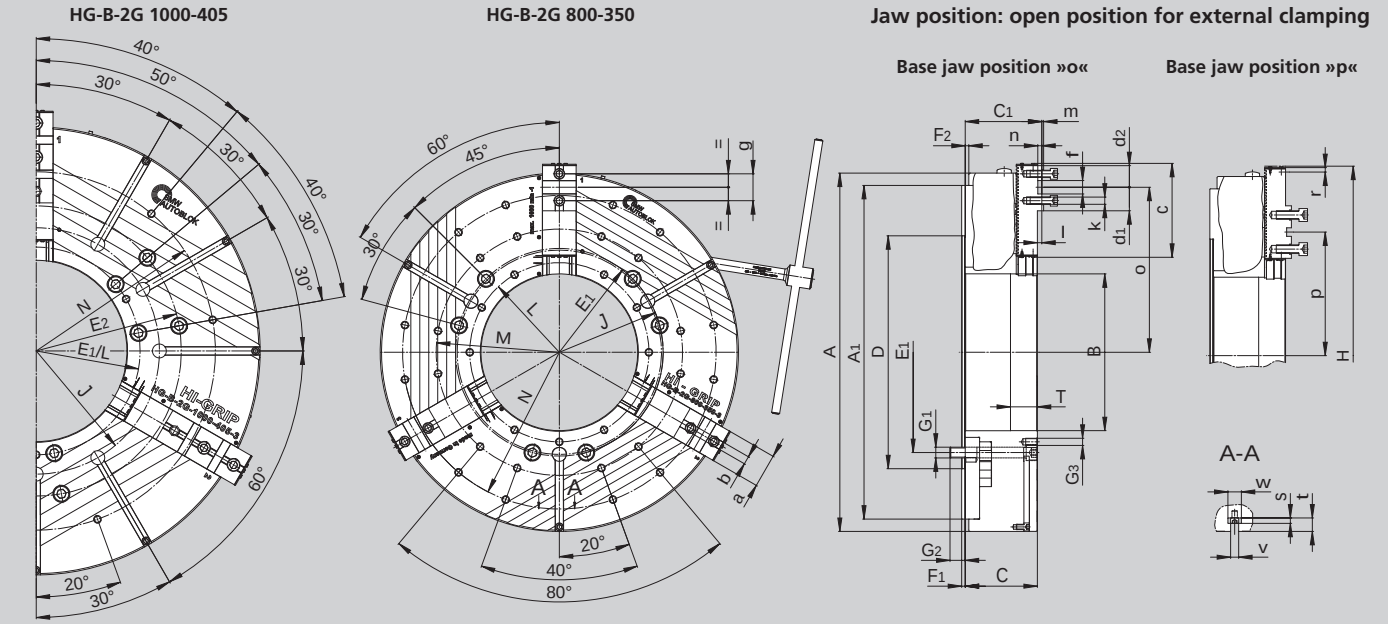

Subject to technical changes.
For more detailed information please ask our customer service

Base jaw position with GBK-B-2G

SMW-AUTOBLOK Type HG-B-2G		800-350	1000-405
Mounting	**Size**	**Z520**	**Z720**
	A	800	1000
	A1	745	880
	B	350	405
	C	161	161
	C1	171	171
	D	520	720
	E1	463.6	463.6
	E2	-	647.6
	F1	8	8
	F2	8	8
	G1	M24 (6x)	M24 (12x)
	G2	34	34
Piston thread/depth	**G3**	M16 (33x) / 26	M16 (9x) / 25
Piston stroke	**H**	845	1076
	J	456	550
	L	400	463.6
	M	550	-
	N	700	800
	T	60	60
Base jaw	**-**	GBK-B-2G 630	GBK-B-2G 800
	a	75	75
	b	18	18
	c	209.7	293.4
	d1	52,5	113
	d2	48.25	49
	f	30	30
	g	60	60
	k	M16	M16
	l	10	10
	m	4	4
	n	9	9
Max./min.	**o**	368.4 / 277.4	478 / 303
Max./min.	**p**	265.4 / 174.4	353 / 178
Base jaw tooth pitch	**-**	7	7
Base jaw offset	**r**	91	175
Base jaw offset	teeth	13	25
	s	12	12
	t	30	30
H8	**v**	18	18
	w	30	30

Usable jaw stroke	mm	13	13.2
Max. total gripping force	kN	250	250
At max. torque Md	Nm	260	260
Speed	r.p.m.	1000	900
Weight without jaws	kg	475	745
Moment of inertia	kg·m²	45.5	109

HG-B-2G

QUICK JAW CHANGE
Wide master jaws

Ordering review

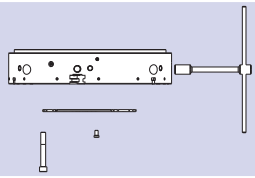

Spindle mounting \ Size	HG-B-2G 800-350	HG-B-2G 1000-450
Centering rim	Z520 162300	Z720 162340

Supply range
Chuck + actuation wrench + mounting bolts + set of coverplates without base jaws

Base jaw type — GBK-B-2G

TONGUE & GROOVE KNCS-N standard

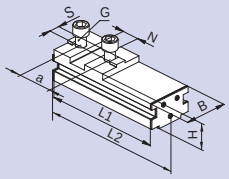

HG-B-2G	800-350	1000-450
Id. No.	162316	162319
B	75	75
H	57	57
L1	199.5	283.2
L2 *	209.7	293.4
N	30	30 (2x)
S	18	18
G (metric)	M16	M16
a	60	2 x 60

* Dimensions incl. seals, covers and mounting screws.

Existing top jaw

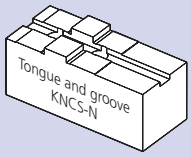

Base jaw type — GBK-BD-2G

INCH SERRATED (for SMW-AUTOBLOK standard jaws)

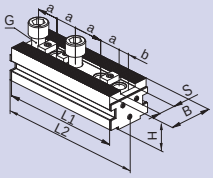

HG-B-2G	800-350	1000-450
Id. No.	162462	162463
B	75	75
H	61	61
L1	199.5	283.5
L2 *	209.7	293.7
N	3/32" x 90°	3/32" x 90°
S (ridge)	25.5	25.5
G	M20	M20
a	38 / 38 / 52 / 38	38 / 38 / 38 / 60.7 / 38 / 38
b	16.75	16.25

* Dimensions incl. seals, covers and mounting screws.

Existing top jaw

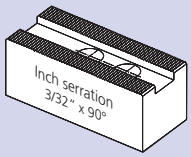

Base jaw type — GBK-BA-2G

TONGUE & GROOVE American standard

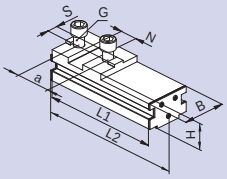

HG-B-2G	800-350	1000-450
Id. No.	162315	162349
B	75	75
H	57	57
L1	199.5	283.2
L2 *	209.7	293.4
N	19.02	19.02 (2x)
S	12.7	12.7
G (inch)	3/4-10	3/4-10
a	76.2	2 x 76.2

* Dimensions incl. seals, covers and mounting screws.

Existing top jaw

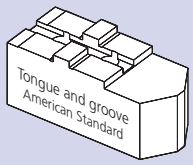

Base jaw type — GBK-BM-2G

METRIC SERRATION

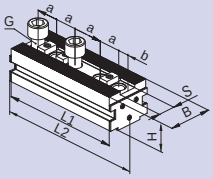

HG-B-2G	800-350	1000-450
Id. No.	162464	162465
B	75	75
H	61	61
L1	199.5	283.5
L2 *	209.7	283.7
N	3 x 60°	3 x 60°
S	25	25
G (metric)	M20	M20
a	60 / 60	60 / 60 / 70.5 / 60
b	16.75	16.75

* Dimensions incl. seals, covers and mounting screws.

Existing top jaw

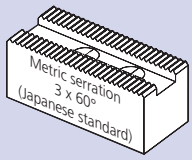

Seal Kit

for hardened base jaws GBK-B-2G / GBK-BD-2G / GBK-BA-2G / GBK-BM-2G

Consisting of seals (6 pcs.) and mounting screws (12 pcs.)

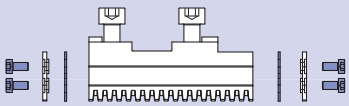

HG-B-2G	800-350	1000-450
Seal Kit Type	GBK-B-2G 630	GBK-B-2G 800
Id. No.	207673	207673

Mounting Kit

for hardened base jaws GBK-B-2G / GBK-BD-2G / GBK-BA-2G / GBK-BM-2G

Consisting of seals (6 pcs.), covers (6 pcs.) and mounting screws (12 pcs.)

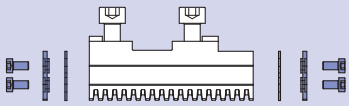

HG-B-2G	800-350	1000-450
Mounting Kit Type	GBK-B-2G 630	GBK-B-2G 800
Id. No.	207674	207674

Advice: Existing master jaws still can be used without seals. A small modification made to the master jaws and a mounting kit can upgrade existing master jaws to become 2G master jaws (instruction for the rework on request).

Quick jaw change

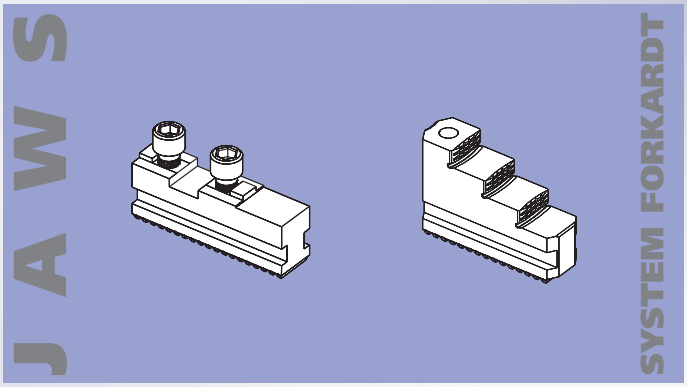

HG-F

- Jaw change in less than 1 minute

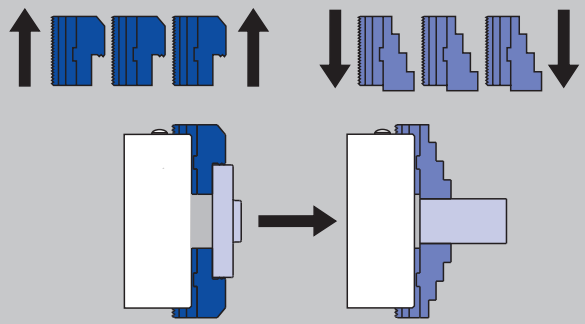

- Universal, because jaws can be radially adjusted and reversed = less jaw sets

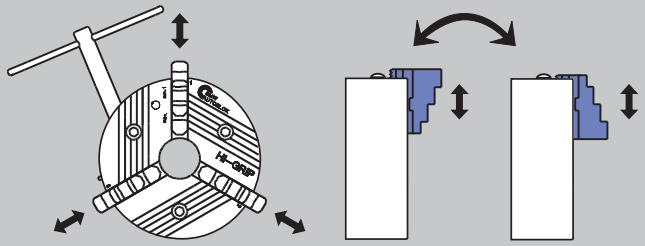

Jaws radially adjustable Jaws 180° reversed

For highest speeds
Flat gripping force curve

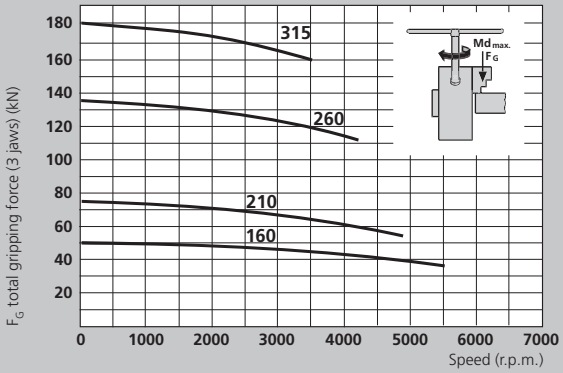

- The max. gripping force is the total, acting on the 3 jaws, obtained by applying to the chuck the max. allowed driving torque. The data refers to a chuck newly maintained accordingly to their service manual, using SMW K05 grease.

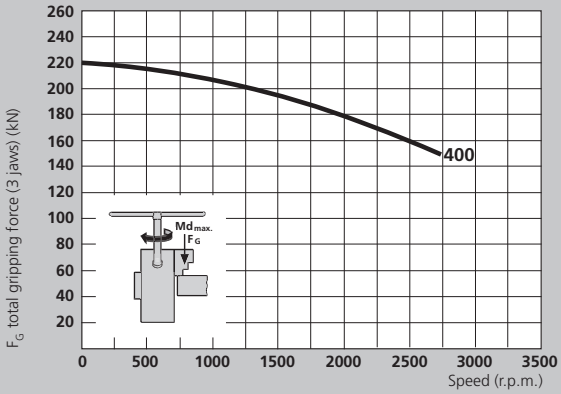

- The dynamic gripping forces have been measured using hardened standard stepped monoblock jaws type GST placed in a position not exceeding the outer diameter of the chuck.

⚠ **Safety advice/danger of damage:**
When using taller/havier jaws and/or clamping on a more external position reduce driving torque/rotating speed accordingly.

manual chuck HI-GRIP®

Direct mounting

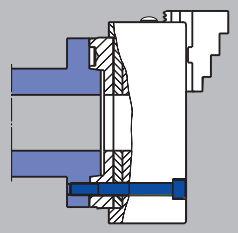

Recess and bolt circle to DIN 55026 / ISO-A 702/1

- No reboring of already machined jaws necessary, because of runout < 0.02 (e.g. HG-F 210)

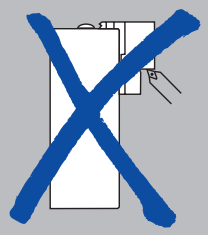

Wedge bar design guarantees highest precision, concentricity and repeatability as well as highest gripping forces

Safety jaw release with interlock

Jaw system "F" (compatible with Forkardt jaws)

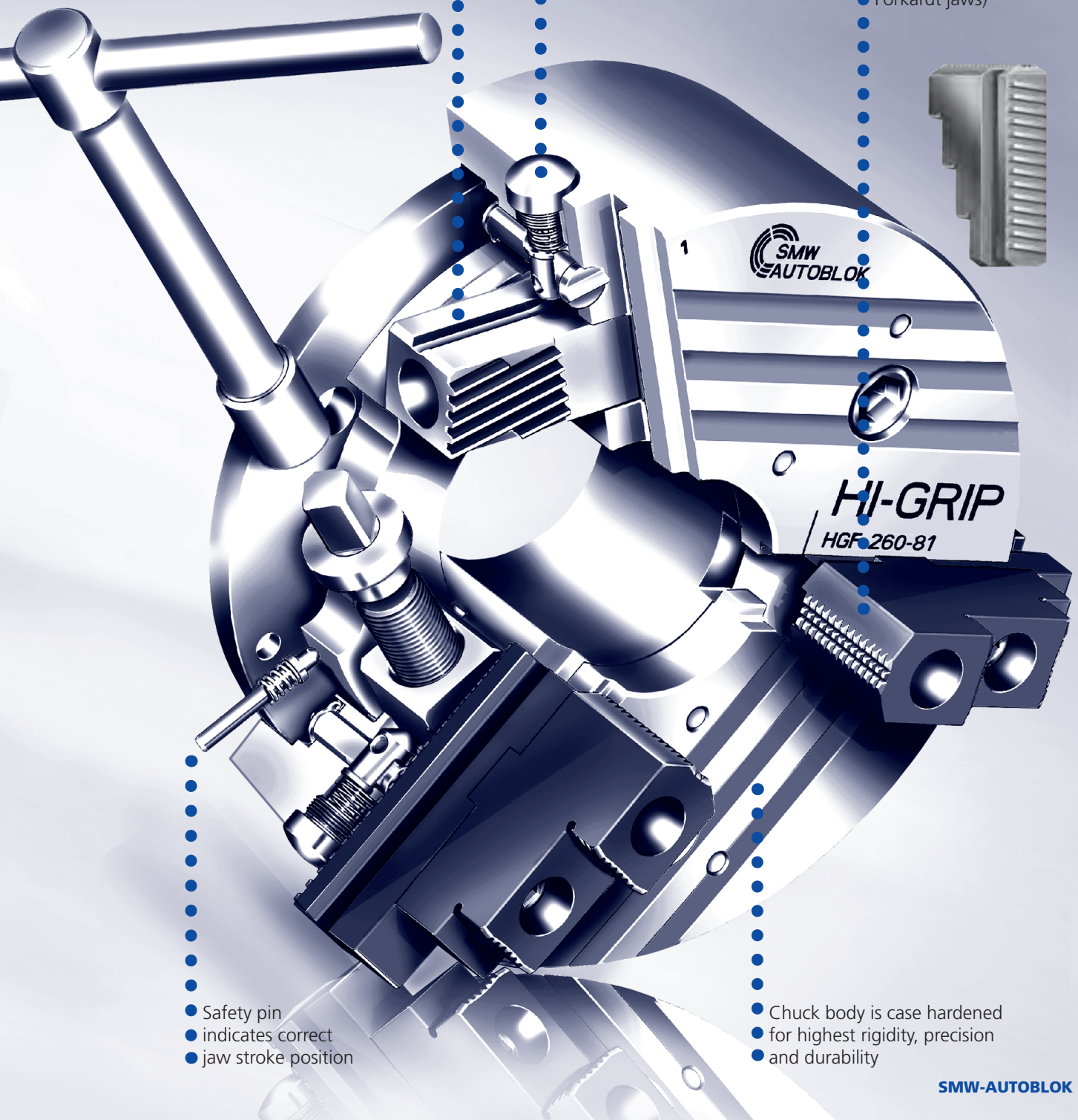

Safety pin indicates correct jaw stroke position

Chuck body is case hardened for highest rigidity, precision and durability

HG-F

QUICK JAW CHANGE
Jaw system Forkardt

Manual chucks Ø 160 - 400 mm

Main dimensions and technical data

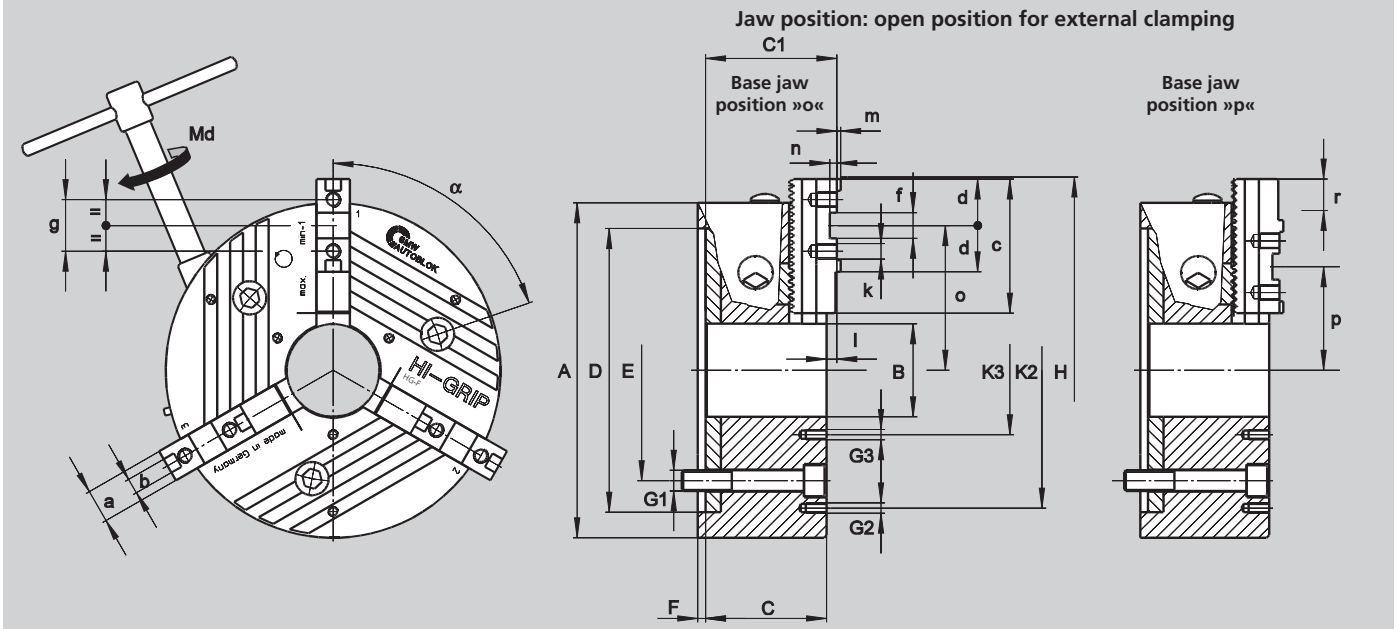

Subject to technical changes.
For more detailed information please ask our customer service.

SMW-AUTOBLOK Type HG-F		160-46	210-60	260-81	315-102	400-128
Mounting	**Size**	**Z140**	**Z170**	**Z220**	**Z300**	**Z380**
	A	165	210	260	315	400
	B	46	60	81	102	128
	C	64	85.5	94	111	132
	C_1	71	92.7	101.7	120.1	141.9
H6	**D**	140	170	220	300	380
	E	104.8	133.4	171.4	235	330.2
	F	5	6	6	6	6
	G_1	M10	M12	M16	M20	M24
	G_2	-	M10/3 x 120°	M10/3 x 120°	M10/3 x 120°	M12/3 x 120°
	G_3	M5/3 x 120°	M6/3 x 120°	M8/3 x 120°	M10/3 x 120°	M12/3 x 120°
Swing dia.	**H**	195	250	300	372	492
	K_2	-	168	210	268	330
	K_3	75	75	95	120	160
	α°	68	64	66	65.5	64.5
	β°	-	60	60	55	45
Master jaw		MFG 160	MFG 200	MFG 250	MFG 315	MFG 400
	a	20	22	26	32	45
f7	**b**	8	10	12	12	18
	c	74	90	110	125	160
	d	28	33	36	36	50
H7	**f**	18	20	20	26	30
	g	32	40	40	54	60
Thread/thread depth	**k**	M8x1/12	M8x1/13	M12x1.5/15	M12x1.5/17	M16/30
	l	6	7.2	7.7	9.3	9.9
	m	2.5	3	3	3	4
	n	5	6	6	8	9
Max./min.	**o**	69.5/55.1	86.5/62	112.2/82.4	149/93	193.6/125.6
Max./min.	**p**	51.5/37.1	67.3/42.8	74.3/44.3	103/54	134.3/66.3
Base jaw tooth pitch	**-**	4.8	4.9	6	7	8.5
Master jaw offset	**r**	14.4	24.5	30	56	68
Master jaw offset	teeth	3	5	5	8	8
Usable jaw stroke	mm	5.9	6.2	7.4	9.6	11.4
Max. total gripping force	kN	60	75	130	180	220
At max. torque Md	Nm	80	120	160	200	250
Speed	r.p.m.	5500	4800	4200	3500	2700
Weight without jaws	kg	8.3	19	32	53	103
Moment of inertia	kg·m²	0.03	0.09	0.25	0.60	1.9

Chuck with center mounting DIN 6350

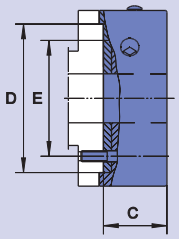

HG-F	160-46	210-60	260-81	315-102	400-128
Mounting	Z140	Z170	Z220	Z300	Z380
C	64	85.5	94	111	132
D	140	170	220	300	380
E	104.8	133.4	171.4	235	330.2
Chuck with MFG + WAK					
Id. No.	090521	090026	090058	090090	090122
Chuck with FST					
Id. No.	090523	090028	090060	090092	090124
Chuck with MFG + GUA					
Id. No.	090522	090027	090059	090091	090123

Chuck with ISO-A mounting DIN 55026

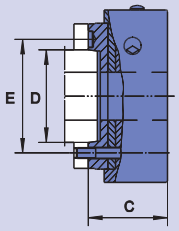

HG-F	160-46		210-60			260-81		315-102		400-128	
Mounting	A4	A5	A5	A6	A8	A6	A8	A8	A11	A11	A15
C	84	79	109.5	107.5	125.5	118	119	141	141	168	168
D	63.51	82.56	82.56	106.39	139.73	106.39	139.73	139.73	196.88	196.88	285.77
E	82.6	104.8	104.8	133.4	171.4	133.4	171.4	171.4	235.0	235.0	330.2
Chuck with MFG + WAK											
Id. No.	090524	090527	090543	090030	090034	090062	090066	090094	090098	090126	090130
Chuck with FST											
Id. No.	090526	090529	090545	090032	090036	090064	090068	090096	090100	090128	090132
Chuck with MFG + GUA											
Id. No.	090525	090528	090544	090031	090035	090063	090067	090095	090099	090127	090131

Chuck with bayonet mounting DIN 55027 Type C

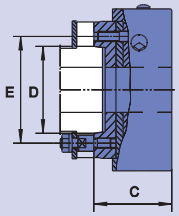

HG-F	160-46		210-60			260-81		315-102		400-128	
Mounting	C4	C5	C5	C6	C8	C6	C8	C8	C11	C11	C15
C	84	84	107.5	107.5	125.5	119	119	141	141	168	168
D	63.51	82.56	82.56	106.39	139.73	106.39	139.73	139.73	196.88	196.88	285.77
E	85	104.8	104.8	133.4	171.4	133.4	171.4	171.4	235.0	235.0	330.2
Chuck with MFG + WAK											
Id. No.	090530	090533	090546	090038	090042	090070	090074	090102	090106	090134	090138
Chuck with FST											
Id. No.	090532	090535	090548	090040	090044	090072	090076	090104	090108	090136	090140
Chuck with MFG + GUA											
Id. No.	090531	090534	090547	090039	090043	090071	090075	090103	090107	090135	090139

Chuck with camlock mounting DIN 55029 Type S

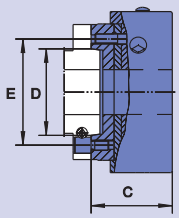

HG-F	160-46		210-60			260-81		315-102		400-128	
Mounting	S4	S5	S5	S6	S8	S6	S8	S8	S11	S11	S15
C	92	92	118.5	118.5	125.5	132	132	154	154	182	182
D	63.51	82.56	82.56	106.39	139.73	106.39	139.73	139.73	196.88	196.88	285.77
E	82.6	104.8	104.8	133.4	171.4	133.4	171.4	171.4	235.0	235.0	330.2
Chuck with MFG + WAK											
Id. No.	090536	090539	090549	090046	090050	090078	090082	090110	090114	090142	090146
Chuck with FST											
Id. No.	090538	090541	090551	090048	090052	090080	090084	090112	090116	090144	090148
Chuck with MFG + GUA											
Id. No.	090537	090540	090550	090047	090051	090079	090083	090111	090115	090143	090147

Parts included: Fixing elements (screws resp. studs resp. camlock bolts)

HG-F

Jaws

QUICK JAW CHANGE
Jaw system Forkardt

MFG
Hardened base jaws

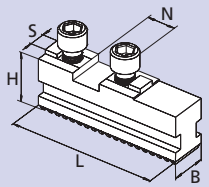

Chuck	HG-F 160	HG-F 210	HG-F 260	HG-F 315	HG-F 400
Jaw type	MFG 160	MFG 200	MFG 250	MFG 315	MFG 400
Id. No.	081303	081304	081305	081306	081307
B	20	22	26	32	45
H	29.5	35	40	46	55
L	74	90	110	125	160
N	18	20	20	26	30
S	8	10	12	12	18
kg/set	0.8	1.2	2.0	3.3	7.3

WAK
Soft top jaws

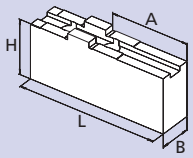

Chuck	HG-F 160	HG-F 210	HG-F 260	HG-F 315	HG-F 400
Jaw type	WAK 160-10	WAK 200-10	WAK 250-10	WAK 400-10	WAK 500-10
Id. No.	012491	012492	012493	012494	012495
B	20	22	30	35	50
H	35.5	42	50	54	75.5
L	85	105	125	145	180
A	42	50	70	74	100
kg/set	1.2	2.0	3.6	5.8	13.7

WAKS
Wide soft top jaws

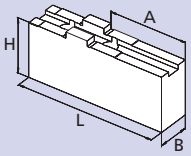

Chuck	HG-F 160	HG-F 210	HG-F 260	HG-F 315	HG-F 400
Jaw type	WAKS 140-10	WAKS 200-30	WAKS 250-20	WAKS 400-30	WAKS 500-30
Id. No.	012496	012497	012498	012500	012501
B	35	40	60	80	90
H	35.5	36	55	64	73
L	63	70	90	100	130
A	25	27	44	44	65
kg/set	1.5	1.9	6.2	11.0	16.4

BFR
Soft monoblock jaws

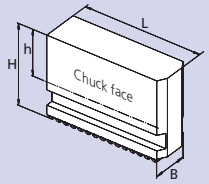

Chuck	HG-F 160	HG-F 210	HG-F 260	HG-F 315	HG-F 400
Jaw type	BFR 160	BFR 200	BFR 250	BFR 315	BFR 400
Id. No.	081272	081273	081274	081275	081276
B	20	22	26	32	45
H	45	60	70	81	93
h	24	35	40	46	45
L	79	94	115	140	176
kg/set	1.4	2.6	4.4	7.4	15.4

FST
Hardened stepped monoblock jaws

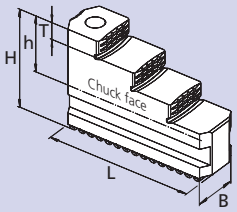

Clamping ranges

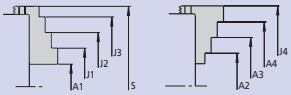

Chuck	HG-F 160	HG-F 210	HG-F 260	HG-F 315	HG-F 400
Jaw type	FST 170	FST 210	FST 250	FST 315	FST 400
Id. No.	081282	081283	081284	081285	081286
B	20	22	26	32	45
H	45	60	70	79	93
h	24	35	40	46	53
L	79	94	114	130	167
T	7.5	1.0	14	15	20
kg/set	1.1	1.9	3.3	5.2	10.8
A1	6-59	10-96	19-99	20-115	48-173
A2	42-89	56-130	76-142	85-180	116-238
A3	73-120	96-170	120-186	140-235	184-308
A4	104-151	136-210	164-230	195-290	252-378
J1	44-78	70-147	81-147	80-170	118-243
J2	74-110	109-187	125-191	135-225	186-310
J3	105-141	149-228	169-235	190-282	253-378
J4	135-182	186-260	211-278	255-350	328-448
S	198	244	280	350	456

JAWS-CATALOG

Request or download:
www.smw-autoblok.de

HG-F

QUICK JAW CHANGE
Jaw system Forkardt

GUA
Hardened reversible stepped top jaws

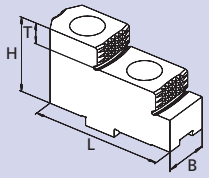

Clamping ranges

Base jaw position "o"

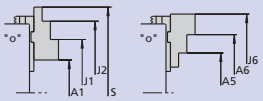

Base jaw position "p"

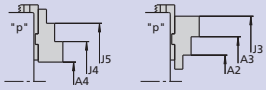

Chuck	HG-F 160	HG-F 210	HG-F 260	HG-F 315	HG-F 400
Jaw type	GUA 160	GUA 200	GUA 250	GUA 400	GUA 500
Id. No.	012484	012485	012486	012487	012488
B	20	22	30	36	45
H	36.5	38	50	56	70
L	63	72	90	105	130
T	7.5	10	14	15	20
kg/set	0.6	0.8	1.9	3.2	10.8
A1	32-69	55-111	73-161	64-194	108-264
A2	60-98	69-125	45-101	44-108	70-158
A3	85-123	96-152	125-181	156-220	171-259
A4	13-51	17-73	20-97	22-100	24-146
A5	78-116	104-163	76-165	72-202	121-277
A6	103-141	131-190	156-245	134-314	222-378
J1	91-129	117-174	152-240	140-270	223-379
J2	116-154	144-201	233-321	256-382	324-480
J3	144-181	158-215	204-259	323-296	286-374
J4	74-111	80-136	101-177	93-176	138-260
J5	99-136	107-163	180-257	210-288	239-361
J6	162-200	193-253	235-323	260-390	336-492
S	198	196-253/255	333	372	492

JAWS-CATALOG

Request or download: www.smw-autoblok.de

Important for maintenance and safe operation, to be ordered with the chuck

Grease K05®

Special grease for manual and power chucks

Cartridge 14 Oz. (DIN 1284)
Grease content 500 g
Id. No. 016440

Can 1000 g
Id. No. 011881

- High adhesion
- High resistance against coolant
- High load bearing capacity
- Low friction coefficient
- High gripping force
- Avoids tribocorrosion

Grease gun

Grease gun (DIN 1283) for cartridges 14 Oz. (DIN 1284)
■ Also refillable from grease can 1000 g

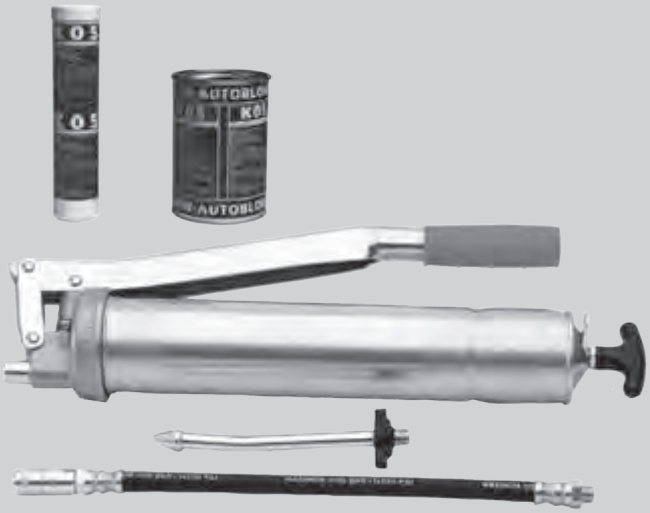

Lubrication set Id. No. 083726
Supply range
- Grease gun
- 1 Adapter flexible for high pressure grease nipple
- 1 Adapter for cone grease nipple

PTF

TONGUE & GROOVE
Manual clamping and radial setting of jaws

High precision 4 jaws independent manual chucks Ø 1000 - 2000 mm

- **Closed center**
- **4 jaws (all diameters)**

Application/customer benefits

- Clamping of large round, square and irregular parts
- Manual radial setting of component and manual clamping
- Suitable for vertical machines. Strong body and master jaws design and option to easily mount a strong center point
- High gripping force allowed by the strong design, with the option to increase it with a torque multiplier
- TONGUE & GROOVE master jaws (type "American Standard")

Technical features

- Manual gripping force applied by a strong and protected screw on a strong and rigid master jaw
- Manual and fine setting of master jaws for workpiece centering
- Protection from contamination with seals along the master jaw profiles
- Possibility to use jaw boxes for manual clamping mounted on the T-slots between the master jaws

Standard equipment

4 jaws independent manual chuck
1 set of soft top jaws
1 regulation and actuation key
1 grease gun and 500 g grease

Ordering example

4 jaws independent chuck PTF 1600/Z720
Id. No. 77137063
Option: 5:1 torque multiplier
Id. No. 13506320

Optional: 5:1 Torque Multiplier

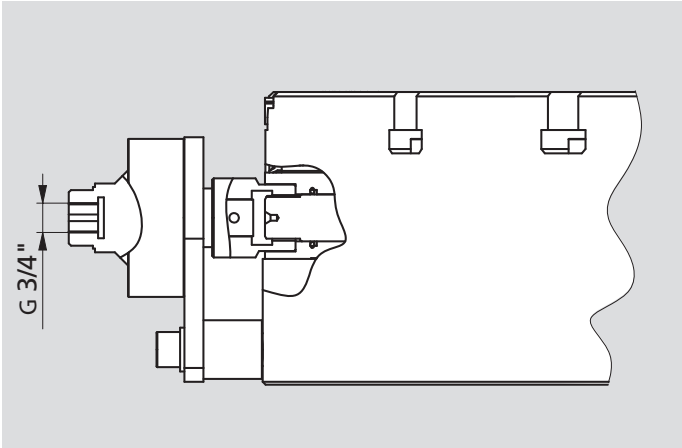

Optional 5:1 Torque multiplier
To achieve the maximum gripping force and speed, the easiest and more confortable way is to use this multiplier that will increase 5 times the input torque.
Id. No. 13506320

Soft and hard top jaws for PTF

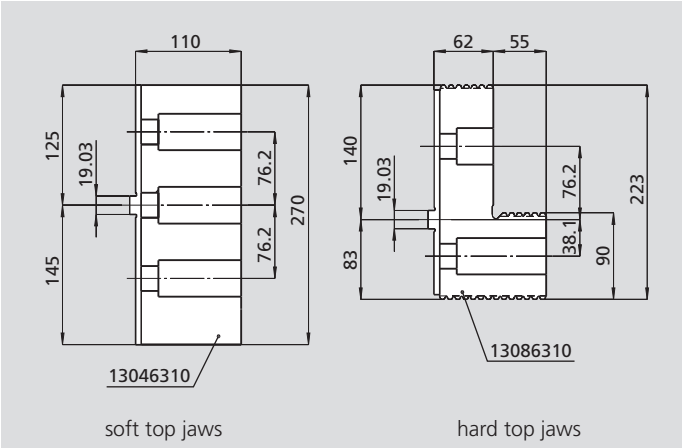

Safety advice/danger of damage:
When using taller/heavier jaws and/or clamping on a bigger diameter reduce operating torque/rotating speed accordingly.

Technical data

SMW-AUTOBLOK Type		PTF 1000	PTF 1250	PTF 1400	PTF 1600	PTF 2000
Radial jaw stroke (manual setting)	mm	60	60	60	60	80
Max. manual operating torque	Nm	600	600	700	700	700
Max. total gripping force*	kN	360	360	360	360	360
Max. speed	r.p.m.	550	450	380	340	280
Weight (without top jaws)	kg	730	930	1435	1860	2730
Moment of inertia	kg·m²	89	183	364	565	1380
Hard top jaw (piece)	Id. No.	13086310	13086310	13086310	13086310	13086310
Soft top jaw (piece)	Id. No.	13046310	13046310	13046310	13046310	13046310
Id. No.		**77137039**	**77137049**	**77137055**	**77137063**	**77137079**

* at max. torque

High precision 4 jaws independent manual chucks Ø 1000 - 2000 mm

- Closed center
- 4 jaws (all diameters)

PTF

TONGUE & GROOVE
Manual clamping and radial setting of jaws

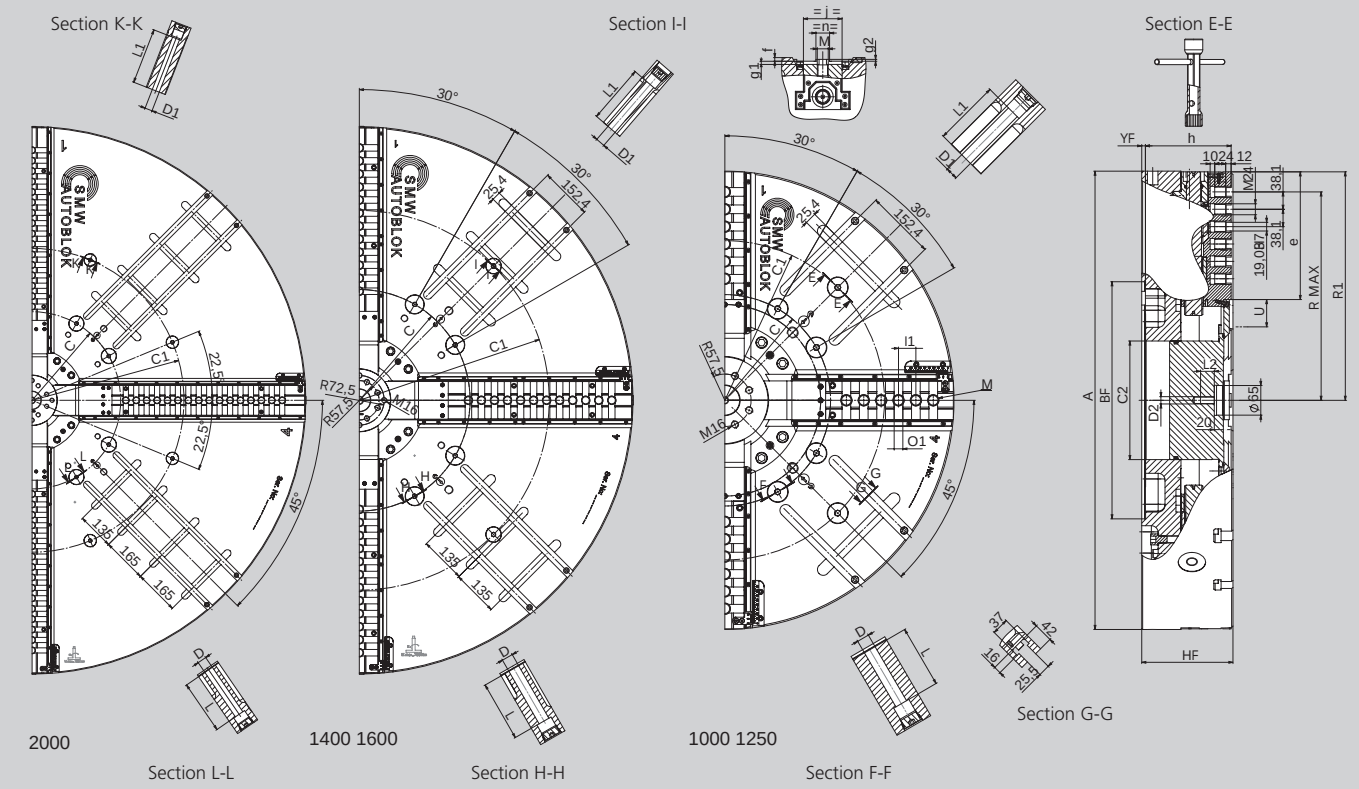

Subject to technical changes.
For more detailed information please ask our customer service.

SMW-AUTOBLOK Type			PTF 1000	PTF 1250	PTF 1400	PTF 1600	PTF 2000
Mounting			Z520	Z520	Z720	Z720	Z720
	A	mm	1005	1250	1400	1600	2000
	B_F H6	mm	520	520	720	720	720
	C	mm	463.6	463.6	647.6	647.6	647.6
	C_1	mm	700	700	1110	1110	1110
	C_2	mm	260	260	300	300	300
	D	mm	27	27	33	33	33
	D_1	mm	27	27	27	27	27
	D_2	mm	M16	M16	M24	M24	M24
	H_F	mm	200	200	240	240	260
	L	mm	137	139	177	177	197
	L_1	mm	145	145	177	173	205
	L_2	mm	30	30	24	24	24
Chuck open	R_1	mm	501	623	696	796	996
Chuck open	R_{max}	mm	457	563	657	738	914
Radial jaw stroke	U	mm	60	60	60	60	80
	Y_F	mm	8	8	8	8	8
	e	mm	280	402	439	536	704
	f	mm	8	8	8	8	8
	g_1	mm	7	7	7	7	7
	g_2	mm	4	4	4	4	4
	h	mm	188	188	228	228	248
	j	mm	85	85	110	110	110
	l_1	mm	38.1	38.1	38.1	38.1	38.1
	m	mm	M24	M24	M24	M24	M24
	n h8	mm	30	30	30	30	30
	o_1 H7	mm	19.03	19.03	19.03	19.03	19.03
Number of "o1" cross grooves			6	9	10	12	16
Number of "m" threads			6	9	11	12	16

JBX

Manual jaw box
SMW-AUTOBLOK standard mounting dimensions

JBX-2G

Manual jaw box
with semi-finished body

High precision, resistance and power manual jaw box

- Accessory for face plates, 4 jaws independent manual or other chucks
- Internal or external clamping

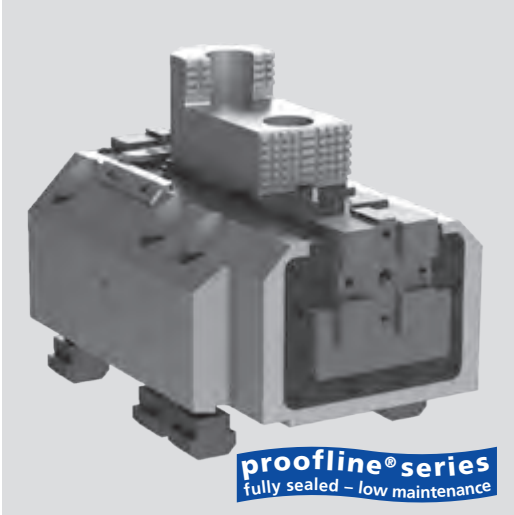

Application/customer benefits

- Manual radial setting and clamping of large components on large plates or chuck
- JBX: standard mounting dimensions for SMW-AUTOBLOK chucks
- JBX-2G: semifinished body and radial reference key to be adapted by customer
- On chucks it gives more gripping force to apply a higher torque on the workpiece
- On chucks it gives more contact points with the workpiece to better distribute the gripping force thus reducing distortion and to center the workpiece
- Very powerful and accurate clamping allowed by strong design
- Suitable for vertical machines thanks to the body fully protected
- Use of standard hard or soft jaw on top of the master jaw or special frontal jaws on the front side of the master jaw
- TONGUE & GROOVE master jaws (type "American Standard")

Technical features

- Manual gripping force applied by a strong and protected screw on a strong and rigid master jaw
- Manual and fine setting of master jaws for workpiece centering
- Protection from contamination with seals along the master jaw profiles
- Designed to work on SMW-AUTOBLOK large manual or power chucks or on special plates
- Body designed for better chip evacuation

Standard equipment

Manual jaws box
1 radial key
6 T-nuts and mounting screws (only JBX)

Ordering example

Qty. 1/2/3/4 manual jaw box JBX 300
Id. No. 77653003
Option: actuation key Id. No. 11122700

Maximum protection

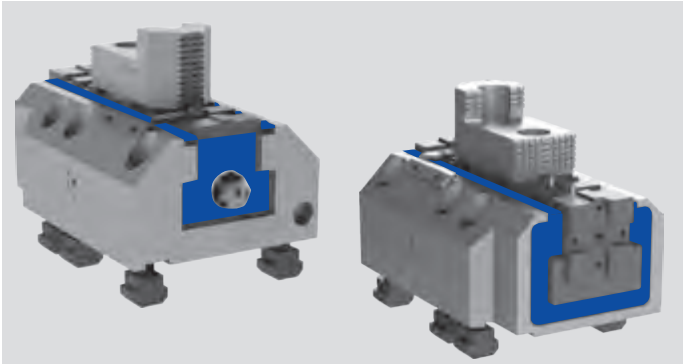

Master jaw protected on each side by lip seals protected with steel profiles. Maximum protection from the penetration of chips, swarf and coolant allowing less maintenance, to work in bad environments and for a longer operative life.

Flexibility of use

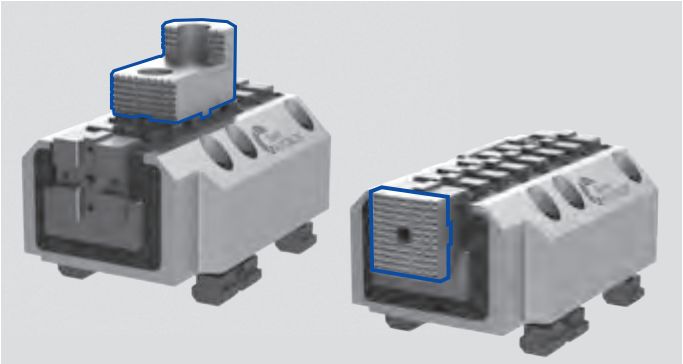

The jaw box can carry standard or special hard or soft jaws mounted on the upper side of the master jaw or special jaws mounted on the front side of the master jaw. The jaws on the front side allow an optimal clamping, in the same axis of the master jaws thus reducing deformation of the jaw and the jaw box. This allows a more rigid and accurate clamping. Also the frontal jaw option increases the flexibility allowing the customer to clamp the component in a very low area where it would be impossible to clamp with traditional jaws mounted on the upper side of the master jaw.

Technical data

SMW-AUTOBLOK Type Id. No.		JBX 300 77653003	JBX-2G 300 77653009	JBX-2G 400 77654003
Jaw stroke (manual setting)	mm	50	50	100
Max. manual operating torque	Nm	200	200	400
Max. gripping force	kN	50	50	100
Weight (without top jaws)	kg	50	50	90
Hard top jaw (1 piece)*	Id. No.	12087111	12087111	12087111
Soft top jaw (1 piece)*	Id. No.	12044050	12044050	12044050
Soft top jaw long (1 piece)*	Id. No.	12045051	12045051	12045051
Soft top jaw for master jaw front side (1 piece)*	Id. No.	65653007	65653007	65653007

* The soft and tempered jaws are not supply, the Id. No. are indicated in the table

High precision, resistance and power manual jaw box

- Accessory for face plates, 4 jaws independent manual or other chucks
- Internal or external clamping

JBX-2G

Manual jaw box with semi-finished body

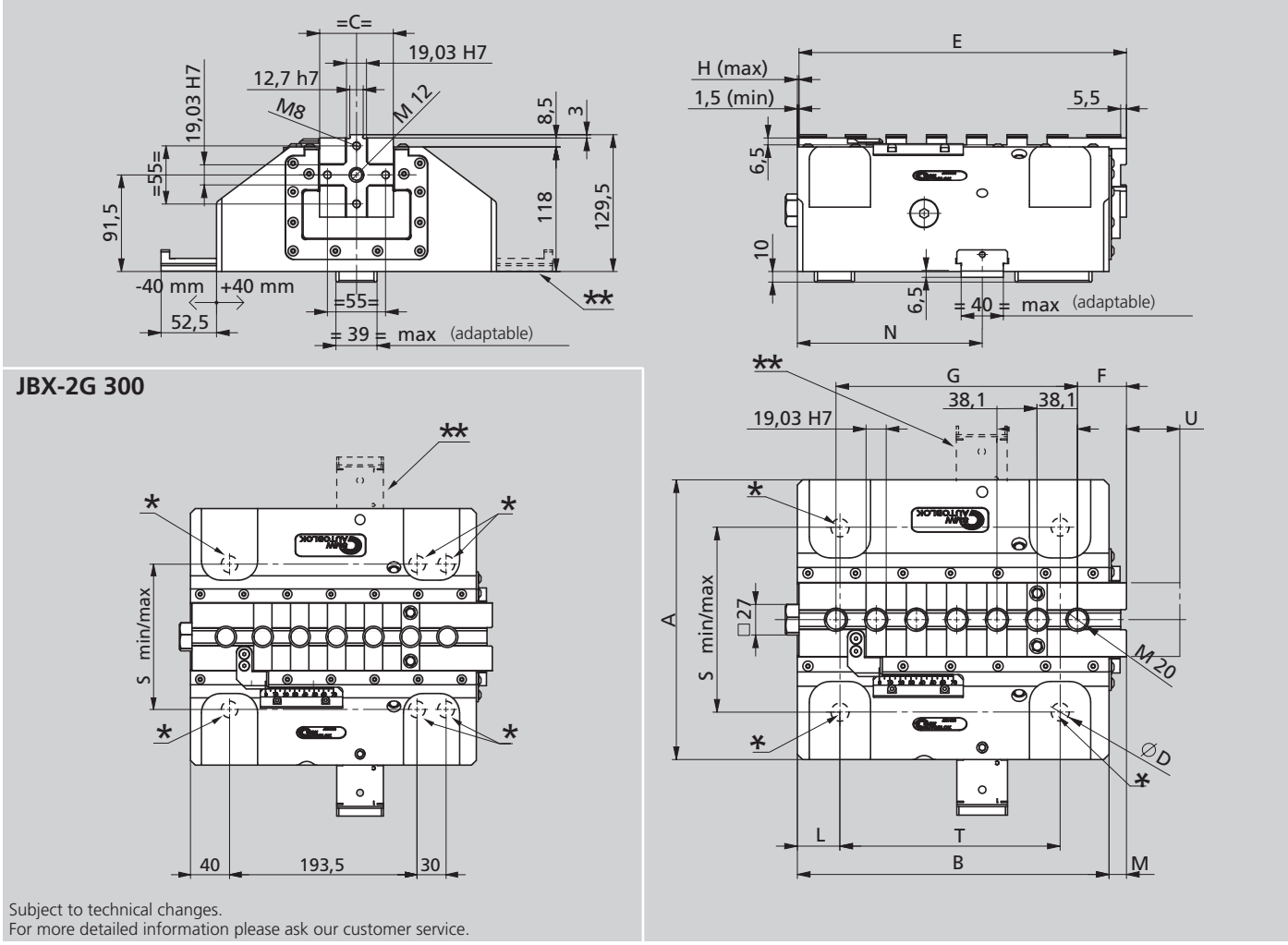

Subject to technical changes.
For more detailed information please ask our customer service.

SMW-AUTOBLOK Type		JBX-2G 300	JBX-2G 400
A	mm	265	310
B	mm	295	380
C	mm	70	80
Ø D min/max	mm	17-25	21-31
E	mm	310	395
F	mm	46.4	55.2
G	mm	228.6	304.8
H	mm	51.5	101.5
L	mm	40	57.5
U stroke	mm	50	100
M	mm	16.5	16.5
N	mm	175	225
S screws M16 min. *	mm	150	-
S screws M20 max. *	mm	230	-
S M20 nuts min. *	mm	175	210
S M24 nuts max. *	mm	220	260
S M30 nuts min. *	mm	-	220
S M30 nuts max. *	mm	-	260
T	mm	208.5	250

* All these elements have to be worked according to the needs of the customer. If the customer will make these modifications, they must be approved by the SMW-AUTOBLOK technical office. Before making the modifications, we suggest to request the jaw box 2D or 3D drawing.
Note that the minimum screws size must be M16 or M20.

** In case of interference, the radial reference key can be mounted on the other side of the JBX-2G.

JBX

Manual jaw box
SMW-AUTOBLOK standard mounting dimensions

JBX-2G

Manual jaw box
with semi-finished body

High precision, resistance and power manual jaw box

- Accessory for face plates, 4 jaws independent manual or other chucks
- Internal or external clamping

JBX 300

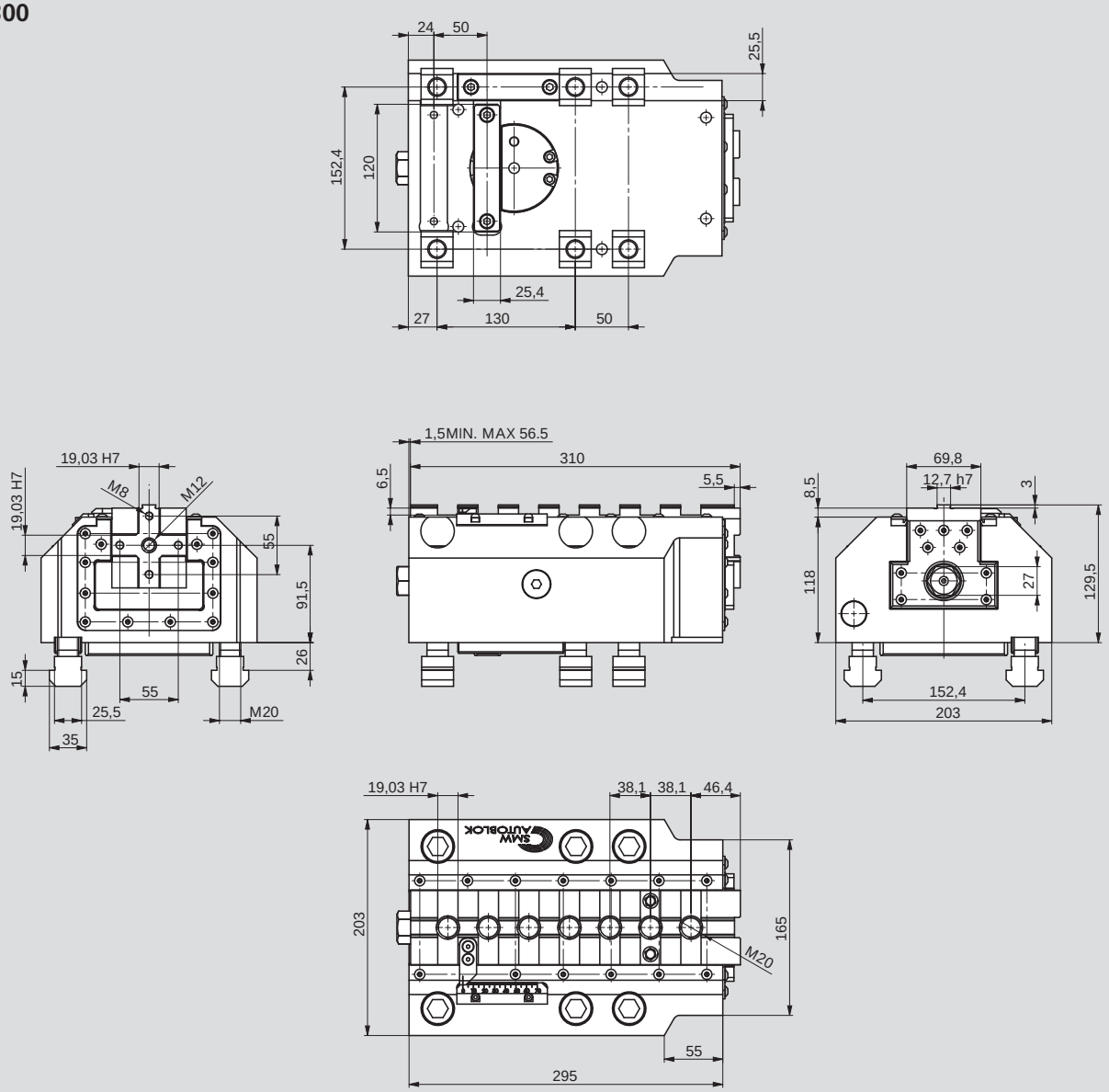

Optional 5:1 Torque multiplier for JBX and JBX-2G

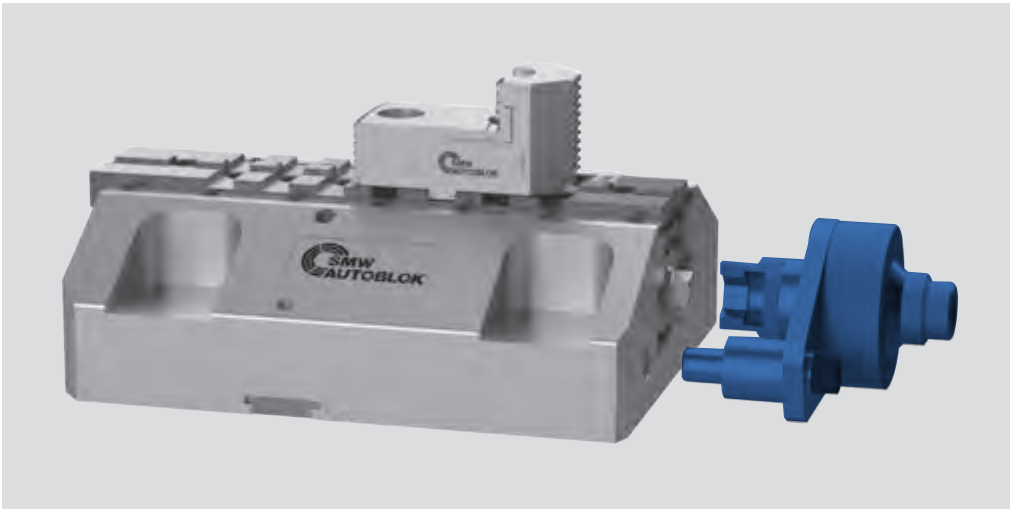

To achieve the maximum gripping force and speed, the easiest and more comfortable way is to use this multiplier that will increase 5 times the input torque.
Id. No. 13506320

Closed center power chucks (page 1 of 2)

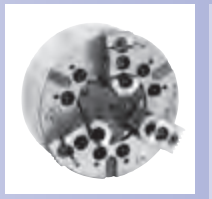

Page 42

AN-D
INCH SERRATION

AN-M
METRIC SERRATION

High precision power chucks
Ø 125 - 400 mm

- Closed center
- 2 and 3 jaws (4 jaws only Ø 400 mm)

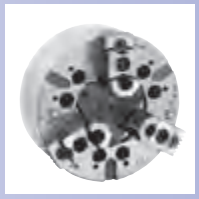

Page 44

AL-D
INCH SERRATION

AL-M
METRIC SERRATION

High precision power chucks
Ø 125 - 400 mm

- Closed center – Long stroke
- 2 and 3 jaws (4 jaws only Ø 400 mm)

Page 46

AN-C
TONGUE & GROOVE

High precision power chucks
Ø 165 - 400 mm

- Closed center
- 2 and 3 jaws (4 jaws only Ø 400 mm)

Page 48

AP®-D
INCH SERRATION

AP®-M
METRIC SERRATION

High precision fully sealed power chucks
Ø 170 - 400 mm

- Closed center
- 3 jaws
- **proofline® chucks** = fully sealed – low maintenance

Page 50

AP®-C
TONGUE & GROOVE

High precision fully sealed power chucks
Ø 170 - 400 mm

- Closed center
- 3 jaws
- **proofline® chucks** = fully sealed – low maintenance

Page 52

APL-D
INCH SERRATION

APL-M
METRIC SERRATION

High precision fully sealed power chucks
Ø 215 - 400 mm

- Closed center
- 3 jaws – Long stroke
- **proofline® chucks** = fully sealed – low maintenance

Page 54

APL-D
INCH SERRATION

APL-C
TONGUE & GROOVE

High precision fully sealed power chucks
Ø 500 - 1000 mm

- Closed center
- 3 jaws – Long stroke
- **proofline® chucks** = fully sealed – low maintenance

Page 56

APL-C
TONGUE & GROOVE

High precision fully sealed power chucks
Ø 215 - 400 mm

- Closed center
- 3 jaws – Long stroke
- **proofline® chucks** = fully sealed – low maintenance

Page 58

NT-C
TONGUE & GROOVE

High precision fully sealed power chucks
Ø 170 - 400 mm

- Centrifugal force compensation
- Closed center
- 3 jaws
- **proofline® chucks** = fully sealed – low maintenance

Page 60

NT-D
INCH SERRATION

NT-M
METRIC SERRATION

High precision fully sealed power chucks
Ø 170 - 400 mm

- Centrifugal force compensation
- Closed center
- 3 jaws
- **proofline® chucks** = fully sealed – low maintenance

Page 62

NTL-D
INCH SERRATION

NTL-M
METRIC SERRATION

High precision fully sealed power chucks
Ø 260 - 400 mm

- Centrifugal force compensation
- Closed center
- 3 jaws – Long stroke
- **proofline® chucks** = fully sealed – low maintenance

Page 64

NTL-C
TONGUE & GROOVE

High precision fully sealed power chucks
Ø 260 - 400 mm

- Centrifugal force compensation
- Closed center
- 3 jaws – Long stroke
- **proofline® chucks** = fully sealed – low maintenance

Page 66

NTL-D
INCH SERRATION

NTL-C
TONGUE & GROOVE

High precision fully sealed power chucks
Ø 500 - 1000 mm

- Centrifugal force compensation
- Closed center
- 3 jaws – Long stroke
- **proofline® chucks** = fully sealed – low maintenance

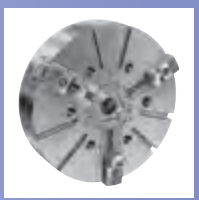

Page 68

IN-D
INCH SERRATION

IN-C
TONGUE & GROOVE

High precision power chucks
Ø 500 - 800 mm

- Closed center
- 3 and 4 jaws

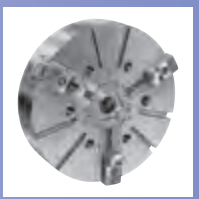

Page 70

IL-D
INCH SERRATION

IL-C
TONGUE & GROOVE

High precision power chucks
Ø 500 - 800 mm

- Long stroke
- Closed center
- 3 and 4 jaws

Continuation on the next page

Closed center power chucks (page 2 of 2)

Continuation from previous page

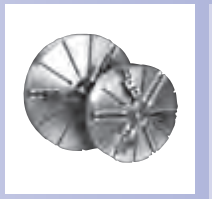

Page 72

IN-D
MODULE 2 serration

IL-D
MODULE 2 serration Long stroke

High precision power chucks
Ø 1000 - 1600 mm

- Closed center
- 3 and 6 jaws (all diameters)

Page 74

IN-D
MODULE 2 serration

IL-D
MODULE 2 serration Long stroke

High precision power chucks
Ø 1000 - 1600 mm

- Closed center
- 4 jaws (all diameters)

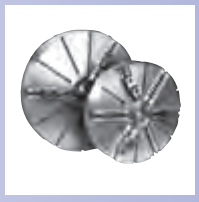

Page 76

IR-C
TONGUE & GROOVE
Radial setting of jaws

High precision power chucks
Ø 1000 - 2500 mm

- Closed center
- 3 and 6 jaws (all diameters)

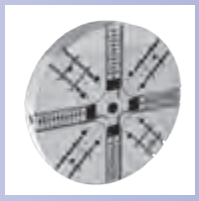

Page 78

IR-C
TONGUE & GROOVE
Radial setting of jaws

High precision power chucks
Ø 1000 - 2000 mm

- Closed center
- 4 jaws (all diameters)

Page 80

RAN
Pull down effect
TONGUE & GROOVE

High precision pull-down chucks
Ø 160 - 400 mm

- Pull-down effect of inclined master jaws
- 3 jaws

Page 82

CL-C
TONGUE & GROOVE

CL-D
INCH SERRATION

High precision power chucks – LONG STROKE
Ø 80 - 315 mm

- Closed center
- Long stroke
- 2 jaws

AN-D

INCH SERRATION

AN-M

METRIC SERRATION

High precision power chucks Ø 125 - 400 mm

- Closed center
- 2 and 3 jaws (4 jaws only Ø 400 mm)

Application/customer benefits

- For chucking parts
- Suitable for vertical machines

AN-D: Master jaws with INCH SERRATION (1/16" x 90°, 3/32" x 90°)
AN-M: Master jaws with METRIC SERRATION (1.5 mm x 60°)
(suitable for japanese chuck top jaws)

Technical features

- Gripping force transmission via wedge hook
- Sealed against swarf and chips
- Case hardened body to assure greatest precision and long chuck life

Standard equipment

2-, 3- or 4-jaw chuck
1 set T-nuts with bolts
1 set soft top jaws
Mounting bolts

Ordering example

3-jaw chuck AN-D 210/A6
or
2-jaw chuck AN-M 250/Z220

Actual gripping force diagrams

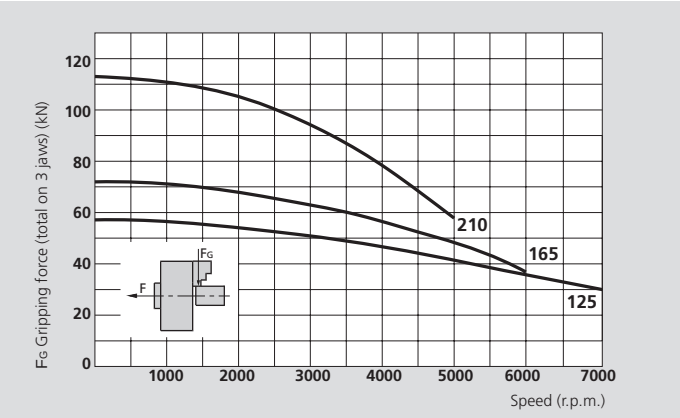

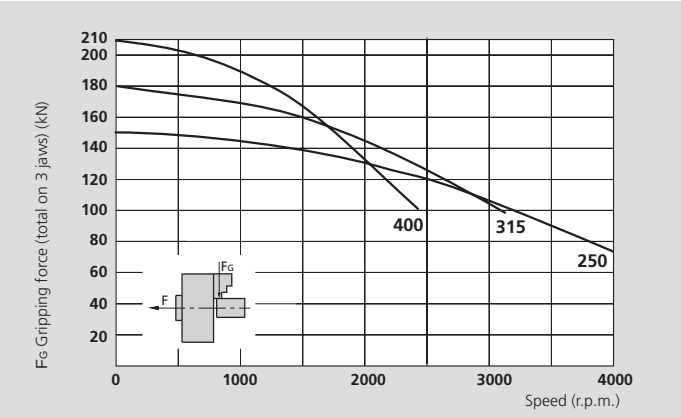

The data in the diagrams refer to 3-jaw-chucks, newly maintained according to their service manuals using SMW-AUTOBLOK K05 grease. The static and dynamic gripping forces have been measured using standard soft top jaws, placed in a position not exceeding the outer diameter of the chuck.

⚠ **Safety advice/danger of damage:**
When using taller/heavier jaws and/or clamping on a bigger diameter reduce draw pull/rotating speed accordingly.

Technical data

SMW-AUTOBLOK Type		AN-D 125 AN-M 125		AN-D 165 AN-M 165		AN-D 210 AN-M 210		AN-D 250 AN-M 250		AN-D 315 AN-M 315		AN-D 400 AN-M 400		
Number of jaws		2	3	2	3	2	3	2	3	2	3	2	3	4
Radial jaw stroke	mm	3.2		3.6		4.4		5		6.3		7		
Axial piston stroke	mm	15		17		21		24		30		33		
Max. draw pull*	kN	14	20	17	25	25	38	33	50	40	60	50	70	70
Max. gripping force*	kN	40	56	50	72	75	115	100	150	120	180	150	210	210
Max. speed	r.p.m.	7000		6000		5000		4000		3200		2400		2000
Weight (without top jaws)	kg	5.5		9.5		19		32		56		84		
Moment of inertia	kg·m²	0.011		0.032		0.105		0.26		0.69		1.6		
Recommended actuating cylinders	**Type**	**SIN-S 85/100**		**SIN-S 100**		**SIN-S 100/125**		**SIN-S 125/150**		**SIN-S 125/150**		**SIN-S 150/175**		

* For internal clamping reduce the draw pull by 30 %

SMW-AUTOBLOK 394

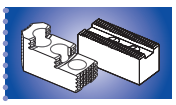

SMW-AUTOBLOK 396

SMW-AUTOBLOK 259

High precision power chucks Ø 125 - 400 mm

- Closed center
- 2 and 3 jaws (4 jaws only Ø 400 mm)

AN-D
INCH SERRATION

AN-M
METRIC SERRATION

1

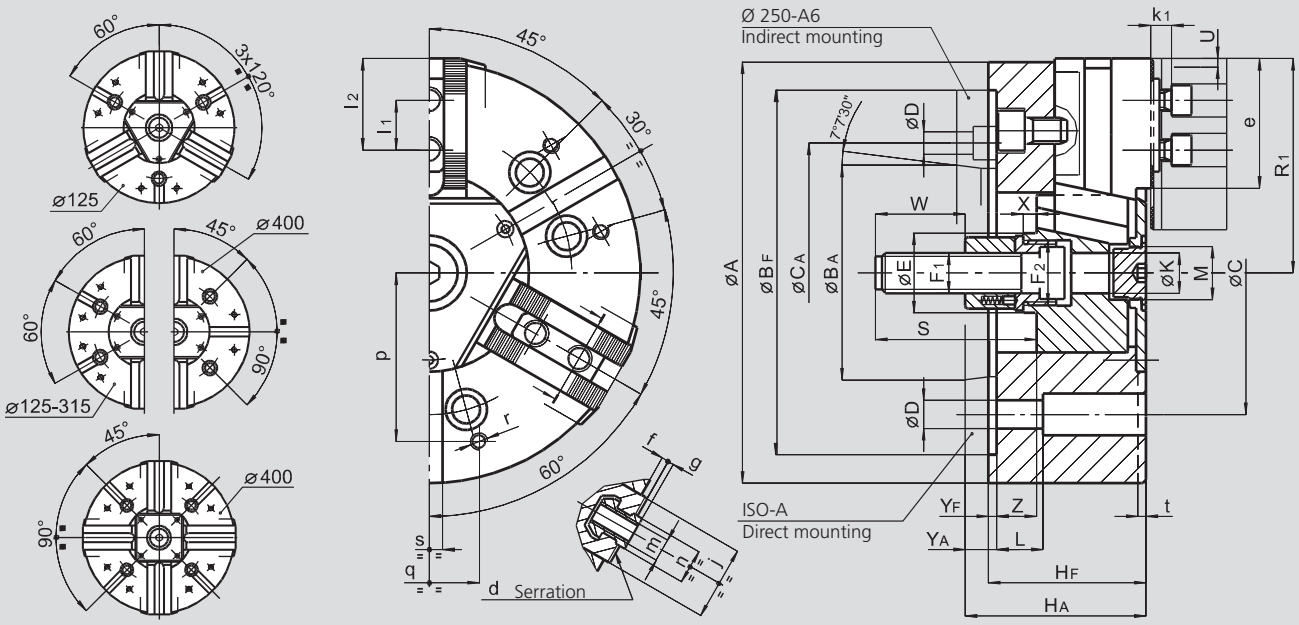

Subject to technical changes.
For more detailed information please ask our customer service.

SMW-AUTOBLOK Type			AN-D 125 AN-M 125		AN-D 165 AN-M 165		AN-D 210 AN-M 210		AN-D 250 AN-M 250			AN-D 315 AN-M 315		AN-D 400 AN-M 400	
Mounting			**Z115**	**A4**	**Z140**	**A5**	**Z170**	**A6**	**Z220**	**A6**	**A8**	**Z220**	**A8**	**Z300**	**A11**
	A	mm	127		165		210		254			315		390	
	BF/BAH6	mm	115	63.513	140	82.563	170	106.375	220	106.375	139.719	220	139.719	300	196.869
	C	mm	82.6		104.8		133.4		171.4	–	171.4	171.4		235	
	CA	mm	–	–	–	–	–	–	–	133.4	–	–	–	–	–
	D	mm	11.5		11.5		13.5		17	13.5	17	17		21	
	E	mm	25		32		41		47			47		86	
	F1	mm	M12 x 1.25		M16		M20		M24			M24		M24	
	F2	mm	M18 x 1.5		M24 x 2		M32 x 1.5		M38 x 1.5			M38 x 1.5		M75 x 2	
	HF/HA	mm	59	67	71	81	85	97	95	114	109	105	119	116	131
	K	mm	9		17		20		25			25		65	
	L	mm	32		23		32		28			38		54	
	M	mm	M16 x 1.5		M24 x 1.5		M32 x 1.5		M32 x 1.5			M38 x 1.5		M68 x 2	
Chuck open	**R1**	mm	64		83		105		128			158		196	
	S	mm	77		104		97		103			103		105	
Jaw stroke	**U**	mm	3.2		3.6		4.4		5			6.3		7	
	W	mm	40		52		55		60			60		60	
	X	mm	12		17		8		8			8		8	
	YF/YA	mm	5	13	5	15	5	17	5	24	19	5	19	6	21
Max./min.	**Z**	mm	15/0		17/0		21/0		24/0			30/0		33/0	
AN-D	**d**	inch	1/16″ x 90°		1/16″ x 90°		1/16″ x 90°		1/16″ x 90°			1/16″ x 90°		3/32″ x 90° (1)	
AN-M	**d**	mm	1.5 x 60°		1.5 x 60°		1.5 x 60°		1.5 x 60°			1.5 x 60°		1.5 x 60°	
	e	mm	37		48		60		77			99		116	
	f	mm	3		4		3		4			4		6	
	g	mm	2.5		2.5		3		3.5			3.5		3.5	
	j	mm	26		30		36		45			45		62	
	k1	mm	10		10		11		12			12		14	
AN-D	**l1**	mm	16		16.5		23		30			30		38	
AN-M	**l1**	mm	16		20		25		30			30		38	
Max./min.	**l2**	mm	30/23		40/24		50/33		62/43			84/43		90/49	
AN-D	**m**	mm	M8		M10		M12		M16			M16		M20	
AN-M	**m**	mm	M8		M10		M12		M12			M16		M20	
AN-D	**n** h8	mm	12		14		17		21			21		25.5	
AN-M	**n** h8	mm	12		12		14		16			21		22	
	p	mm	52		65		80		102			120		150	
	q	mm	30		36		45		60			60		80	
	r	mm	M6		M8		M8		M10			M10		M12	
	s	mm	12		16		16		16			16		20	
	t	mm	4		5		5		5			5		5	

(1) Serration 1/16 x 90° on request

AL-D

INCH SERRATION

AL-M

METRIC SERRATION

High precision power chucks Ø 125 - 400 mm

- Closed center
- Long stroke
- 2 and 3 jaws (4 jaws only Ø 400 mm)

Application/customer benefits

- For chucking parts
- Suitable for vertical machines
- Long clamping stroke (possibility to clamp 1st and 2nd operation with the same jaws)

AL-D: Master jaws with INCH SERRATION (1/16" x 90°, 3/32" x 90°)
AL-M: Master jaws with METRIC SERRATION (1.5 mm x 60°)
(suitable for japanese chuck top jaws)

Technical features

- Extra long jaw stroke
- Gripping force transmission via wedge hook
- Case hardened body to assure greatest precision and long chuck life

Standard equipment

2-, 3- or 4-jaw chuck
1 set T-nuts with bolts
1 set soft top jaws
Mounting bolts

Ordering example

3-jaw chuck AL-D 210/A6
or
2-jaw chuck AL-M 250/Z220

Actual gripping force diagrams

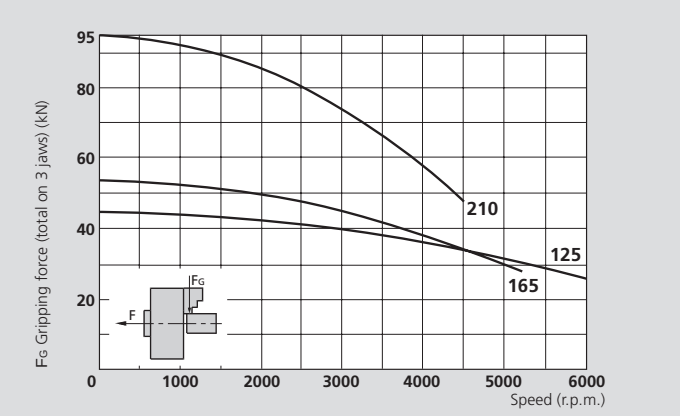

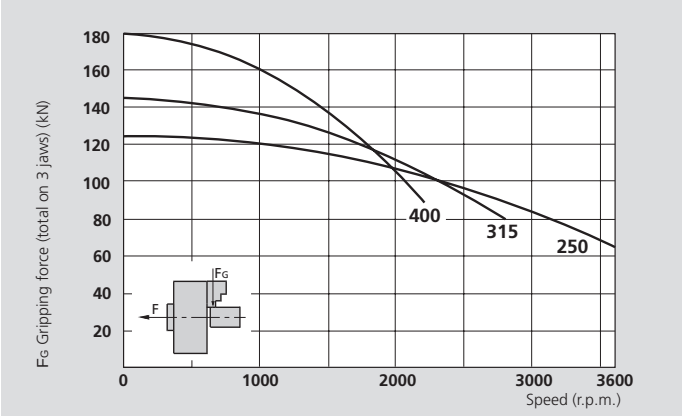

The data in the diagrams refer to 3-jaw-chucks, newly maintained according to their service manuals using SMW-AUTOBLOK K05 grease. The static and dynamic gripping forces have been measured using standard soft top jaws, placed in a position not exceeding the outer diameter of the chuck.

⚠ **Safety advice/danger of damage:**
When using taller/heavier jaws and/or clamping on a bigger diameter reduce draw pull/rotating speed accordingly.

Technical data

SMW-AUTOBLOK Type		AL-D 125 AL-M 125		AL-D 165 AL-M 165		AL-D 210 AL-M 210		AL-D 250 AL-M 250		AL-D 315 AL-M 315		AL-D 400 AL-M 400		
Number of jaws		2	3	2	3	2	3	2	3	2	3	2	3	4
Radial jaw stroke	mm	6		7		8.5		10		12		13		
Axial piston stroke	mm	15		17		21		25		30		33		
Max. draw pull*	kN	17	25	20	30	35	53	45	68	54	80	67	100	100
Max. gripping force*	kN	30	45	36	54	63	95	83	125	97	145	120	180	180
Max. speed	r.p.m.	6000		5200		4500		3600		2800		2000		1700
Weight (without top jaws)	kg	5.5		9.5		19		32		56		84		
Moment of inertia	kg·m²	0.011		0.032		0.105		0.26		0.69		1.6		
Recommended actuating cylinders	**Type**	**SIN-S 85/100**		**SIN-S 100**		**SIN-S 100/125**		**SIN-S 125/150**		**SIN-S 125/150**		**SIN-S 150/175**		

* For internal clamping reduce the draw pull by 30 %

SMW-AUTOBLOK 394

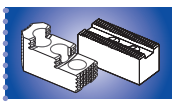
SMW-AUTOBLOK 396

SMW-AUTOBLOK 259

High precision power chucks Ø 125 - 400 mm

- Closed center
- Long stroke
- 2 and 3 jaws (4 jaws only Ø 400 mm)

AL-D
INCH SERRATION

AL-M
METRIC SERRATION

1

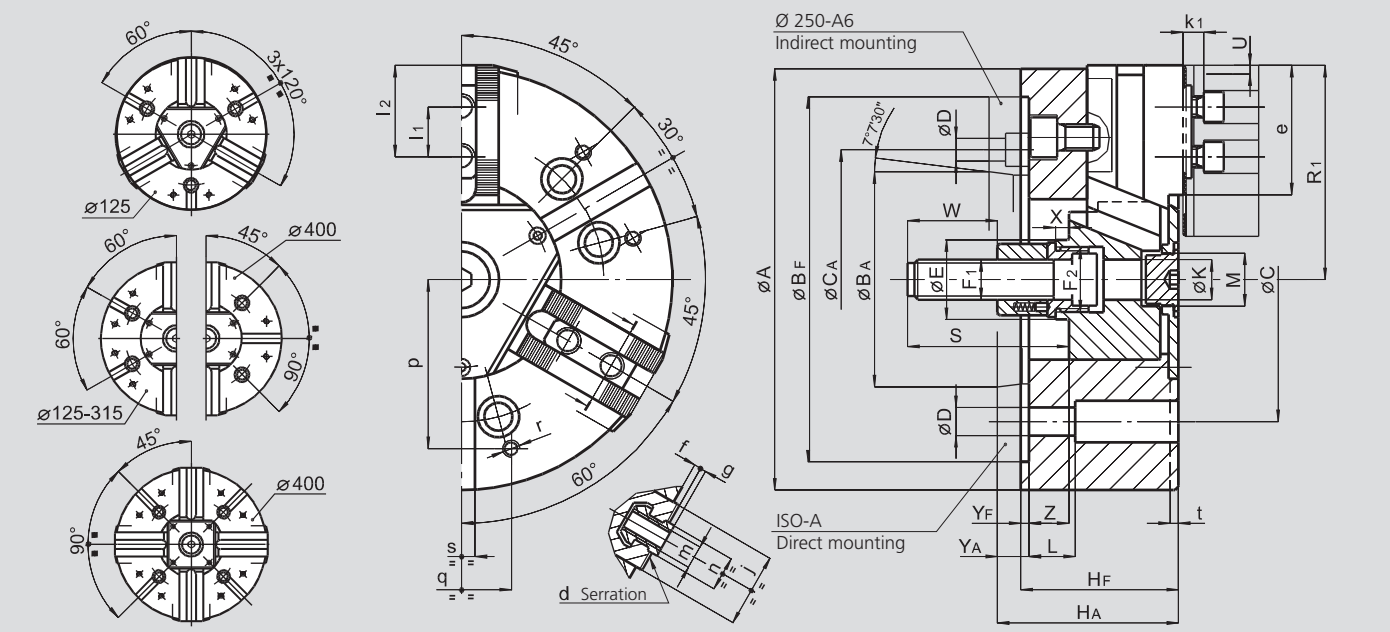

Subject to technical changes.
For more detailed information please ask our customer service.

SMW-AUTOBLOK Type			AL-D 125 AL-M 125		AL-D 165 AL-M 165		AL-D 210 AL-M 210		AL-D 250 AL-M 250			AL-D 315 AL-M 315		AL-D 400 AL-M 400	
Mounting			Z115	A4	Z140	A5	Z170	A6	Z220	A6	A8	Z220	A8	Z300	A11
	A	mm	127		165		210		254			315		390	
	BF/BAH6	mm	115	63.513	140	82.563	170	106.375	220	106.375	139.719	220	139.719	300	196.869
	C	mm	82.6		104.8		133.4		171.4	–	171.4	171.4		235	
	CA	mm	–	–	–	–	–	–	–	133.4	–	–	–	–	–
	D	mm	11.5		11.5		13.5		17	13.5	17	17		21	
	E	mm	25		32		41		47			47		86	
	F1	mm	M12 x 1.25		M16		M20		M24			M24		M24	
	F2	mm	M18 x 1.5		M24 x 2		M32 x 1.5		M38 x 1.5			M38 x 1.5		M75 x 2	
	HF/HA	mm	59	67	71	81	85	97	95	114	109	105	119	116	131
	K	mm	9		17		20		25			25		65	
	L	mm	32		23		32		28			38		54	
	M	mm	M16 x 1.5		M24 x 1.5		M32 x 1.5		M32 x 1.5			M38 x 1.5		M68 x 2	
Chuck open	R1	mm	67		86		109		133			164		202	
	S	mm	77		104		97		103			103		105	
Jaw stroke	U	mm	6		7		8.5		10			12		13	
	W	mm	40		52		55		60			60		60	
	X	mm	12		17		8		8			8		8	
	YF/YA	mm	5	13	5	15	5	17	5	24	19	5	19	6	21
Max./min.	Z	mm	15/0		17/0		21/0		24/-1			30/0		33/0	
AL-D	d	inch	1/16" x 90°		1/16" x 90°		1/16" x 90°		1/16" x 90°			1/16" x 90°		3/32" x 90° (1)	
AL-M	d	mm	1.5 x 60°		1.5 x 60°		1.5 x 60°		1.5 x 60°			1.5 x 60°		1.5 x 60°	
	e	mm	37		49		61		77			99		116	
	f	mm	3		4		3		4			4		6	
	g	mm	2.5		2.5		3		3.5			3.5		3.5	
	j	mm	26		30		36		45			45		62	
	k1	mm	10		10		11		12			12		14	
AL-D	l1	mm	16		16.5		23		30			30		38	
AL-M	l1	mm	16		20		25		30			30		38	
Max./min.	l2	mm	30/23		40/24		50/33		62/43			84/43		90/49	
AL-D	m	mm	M8		M10		M12		M16			M16		M20	
AL-M	m	mm	M8		M10		M12		M12			M16		M20	
AL-D	n h8	mm	12		14		17		21			21		25.5	
AL-M	n h8	mm	12		12		14		16			21		22	
	p	mm	52		65		80		102			120		150	
	q	mm	30		36		45		60			60		80	
	r	mm	M6		M8		M8		M10			M10		M12	
	s	mm	12		16		16		16			16		20	
	t	mm	5		5		5		5			5		5	

(1) Serration 1/16 x 90° on request

AN-C

TONGUE & GROOVE

High precision power chucks Ø 165 - 400 mm

- Closed center
- 2 and 3 jaws (4 jaws only Ø 400 mm)

Application/customer benefits

- For chucking parts
- Suitable for vertical machines
- Tongue & groove master jaws for heavy or very high profile special top jaws

AN-C: TONGUE & GROOVE master jaws (American Standard)

Technical features

- Gripping force transmission via wedge hook
- Case hardened body to assure greatest precision and long chuck life

Standard equipment

2-, 3- or 4-jaw chuck
Mounting bolts

Ordering example

3-jaw chuck AN-C 250/Z220
or
2-jaw chuck AN-C 315/A8

Actual gripping force diagrams

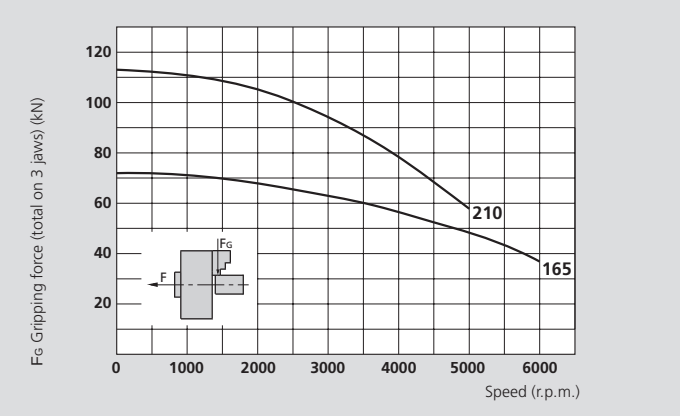

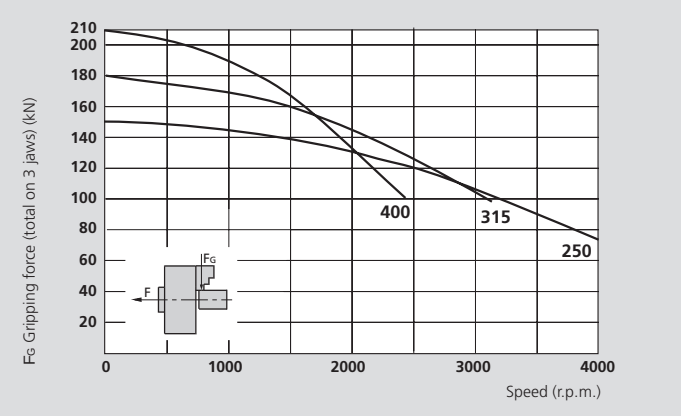

The data in the diagrams refer to 3-jaw-chucks, newly maintained according to their service manuals using SMW-AUTOBLOK K05 grease. The static and dynamic gripping forces have been measured using standard soft top jaws, placed in a position not exceeding the outer diameter of the chuck.

⚠ **Safety advice/danger of damage:**
When using taller/heavier jaws and/or clamping on a bigger diameter reduce draw pull/rotating speed accordingly.

Technical data

SMW-AUTOBLOK Type		AN-C 165		AN-C 210		AN-C 250		AN-C 315		AN-C 400		
Number of jaws		2	3	2	3	2	3	2	3	2	3	4
Radial jaw stroke	mm	3.6		4.4		5		6.3		7		
Axial piston stroke	mm	17		21		24		30		33		
Max. draw pull*	kN	17	25	25	38	33	50	40	60	50	70	70
Max. gripping force*	kN	50	72	75	115	100	150	120	180	150	210	210
Max. speed	r.p.m.	6000		5000		4000		3200		2400		2000
Weight (without top jaws)	kg	10		19.5		33		57		84		
Moment of inertia	kg·m²	0.034		0.11		0.27		0.70		1.6		
Recommended actuating cylinders	**Type**	**SIN-S 100**		**SIN-S 100/125**		**SIN-S 125/150**		**SIN-S 125/150**		**SIN-S 150/175**		

* For internal clamping reduce the draw pull by 30 %.

SMW-AUTOBLOK 394

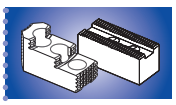

SMW-AUTOBLOK 396

SMW-AUTOBLOK 259

High precision power chucks Ø 165 - 400 mm

AN-C

- Closed center
- 2 and 3 jaws (4 jaws only Ø 400 mm)

TONGUE & GROOVE

1

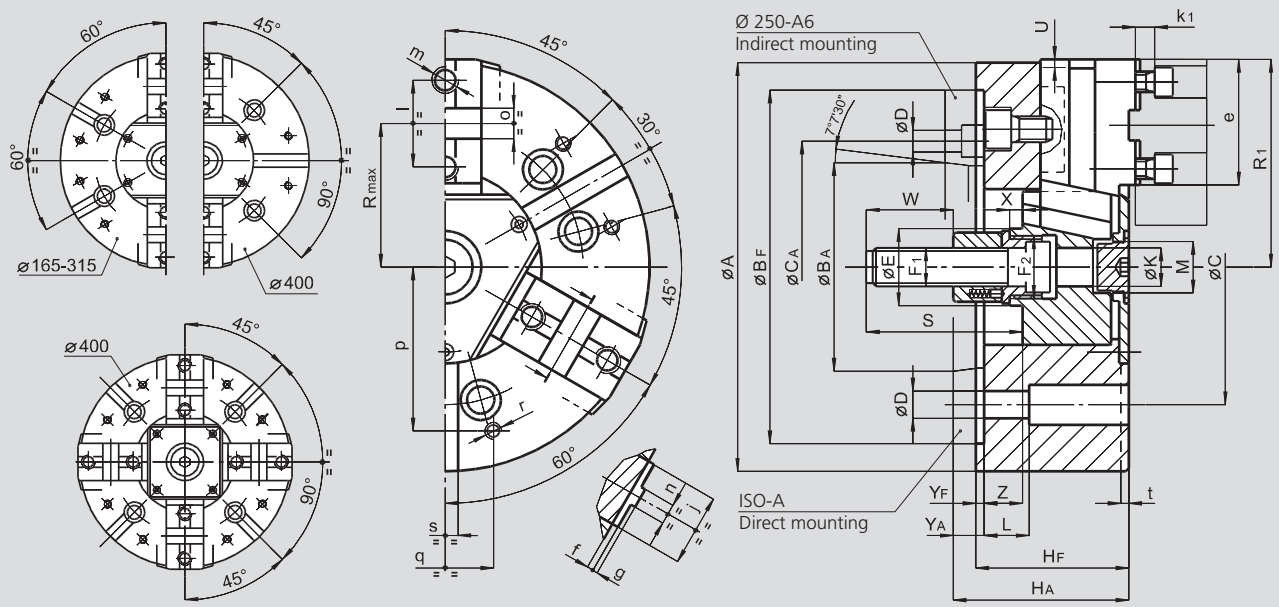

Subject to technical changes.
For more detailed information please ask our customer service.

SMW-AUTOBLOK Type			AN-C 165		AN-C 210		AN-C 250			AN-C 315		AN-C 400	
Mounting			Z140	A5	Z170	A6	Z220	A6	A8	Z220	A8	Z300	A11
	A	mm	165		210		254			315		390	
	BF/BAH6	mm	140	82.563	170	106.375	220	106.375	139.719	220	139.719	300	196.869
	C	mm	104.8		133.4		171.4	–	171.4	171.4		235	
	CA	mm	–	–	–	–	–	133.4	–	–	–	–	–
	D	mm	11.5		13.5		17	13.5	17	17		21	
	E	mm	32		41		47			47		86	
	F1	mm	M16		M20		M24			M24		M24	
	F2	mm	M24 x 2		M32 x 1.5		M38 x 1.5			M38 x 1.5		M75 x 2	
	HF/HA	mm	71	81	85	97	95	114	109	105	119	116	131
	K	mm	17		20		25			25		65	
	L	mm	23		32		28			38		54	
	M	mm	M24 x 1.5		M32 x 1.5		M32 x 1.5			M38 x 1.5		M68 x 2	
Chuck open	**R1**	mm	83		105		128			158		196	
Max.	**R**	mm	56		72		88			105		133.5	
	S	mm	104		97		103			103		105	
Jaw stroke	**U**	mm	3.6		4.4		5			6.3		7	
	W	mm	52		55		60			60		60	
	X	mm	17		8		8			8		8	
	YF/YA	mm	5	15	5	17	5	24	19	5	19	6	21
Max./min.	**Z**	mm	17/0		21/0		24/0			30/0		33/0	
	e	mm	54		71		77			99		116	
	f	mm	4		4		4			4		7	
	g	mm	3		3		3			3		3	
	j	mm	30		36		45			45		62	
	k1	mm	10		11		12			12		14	
	l	mm	38		44.4		54			63.5		76.2	
	m	mm	M10		M12		M16			M16		M20	
	n h8	mm	7.94		7.94		12.70			12.70		12.70	
	o H7	mm	12.68		12.68		19.03			19.03		19.03	
	p	mm	65		80		102			120		150	
	q	mm	36		45		60			60		80	
	r	mm	M8		M8		M10			M10		M12	
	s	mm	16		16		16			16		20	
	t	mm	5		5		5			5		5	

AP®-D

INCH SERRATION

AP®-M

METRIC SERRATION

High precision power chucks Ø 170 - 400 mm

- Closed center
- 3 jaws
- proofline® chucks = fully sealed – low maintenance

Application/customer benefits

- For mid to large batch production
- Fully sealed, ideal for dry machining of castings and forgings or if high pressure coolant is used

AP-D: Master jaws with INCH SERRATION (1/16" x 90°, 3/32" x 90°)
AP-M: Master jaws with METRIC SERRATION (1.5 mm x 60°) (suitable for japanese chuck top jaws)

Technical features

- Constant gripping force with permanent grease lubrication
- Central bore for coolant and/or air
- Chuck body and internal parts case hardened
- **proofline® chucks** = fully sealed – low maintenance

Standard equipment

3-jaw chuck
1 set T-nuts and bolts
1 set soft top jaws
Mounting bolts

Ordering example

3-jaw chuck AP-D 215/A6
or
3-jaw chuck AP-M 260/Z220

Actual gripping force diagrams

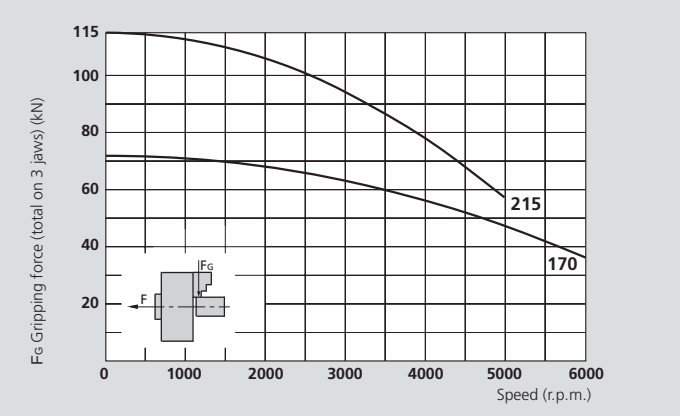

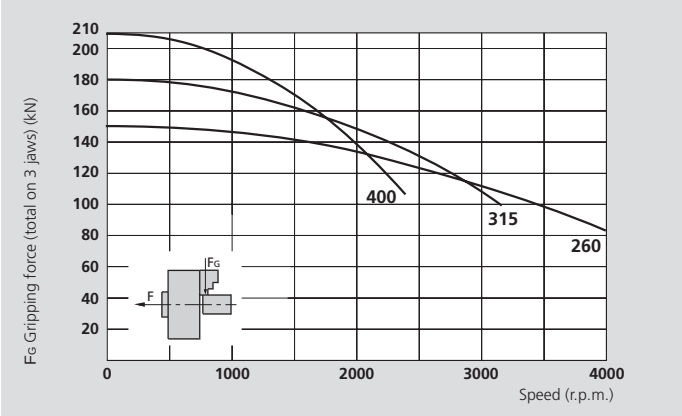

The data in the diagrams refer to 3-jaw-chucks, newly maintained according to their service manuals using SMW-AUTOBLOK K67 grease. The static and dynamic gripping forces have been measured using standard soft top jaws, placed in a position not exceeding the outer diameter of the chuck.

⚠ **Safety advice/danger of damage:**
When using taller/heavier jaws and/or clamping on a bigger diameter reduce draw pull/rotating speed accordingly.

Technical data

SMW-AUTOBLOK Type		AP-D 170 AP-M 170	AP-D 215 AP-M 215	AP-D 260 AP-M 260	AP-D 315 AP-M 315	AP-D 400 AP-M 400
Number of jaws		3	3	3	3	3
Radial jaw stroke	mm	3.6	4.6	5	6.3	7
Axial piston stroke	mm	17	22	24	30	33
Max. draw pull*	kN	30	42	55	65	75
Max. gripping force*	kN	72	112	150	180	210
Max. speed	r.p.m.	6000	5000	4000	3200	2400
Weight (without top jaws)	kg	10	19.5	32.5	56	90
Moment of inertia	kg·m²	0.037	0.113	0.28	0.69	1.7
Recommended actuating cylinders	**Type**	**SIN-S 100**	**SIN-S 100/125**	**SIN-S 125/150**	**SIN-S 125/150**	**SIN-S 150/175**

* For internal clamping reduce the draw pull by 30 %

on request:
Tooling Standard Parts Catalog

SMW-AUTOBLOK 394

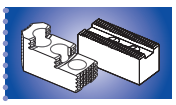

SMW-AUTOBLOK 396

SMW-AUTOBLOK 259

High precision power chucks Ø 170 - 400 mm

- Closed center
- 3 jaws
- proofline® chucks = fully sealed – low maintenance

AP®-D
INCH SERRATION

AP®-M
METRIC SERRATION

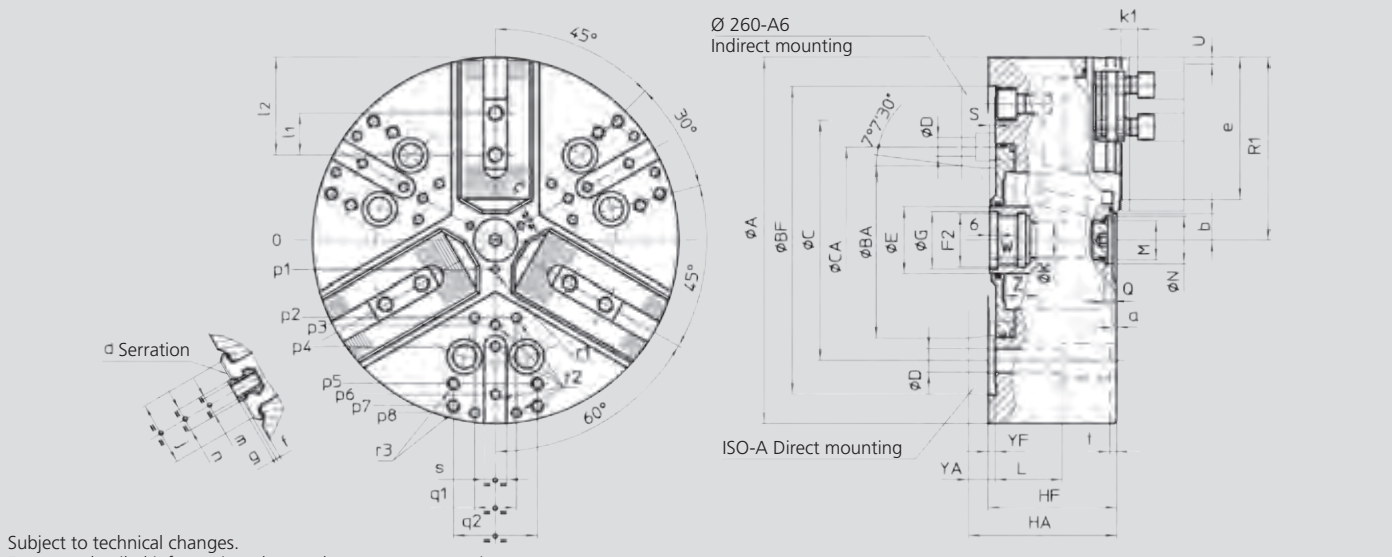

Subject to technical changes.
For more detailed information please ask our customer service.

SMW-AUTOBLOK Type			AP-D 170 AP-M 170		AP-D 215 AP-M 215		AP-D 260 AP-M 260			AP-D 315 AP-M 315		AP-D 400 AP-M 400	
Mounting			Z140	A5	Z170	A6	Z220	A6	A8	Z220	A8	Z300	A11
	A	mm	172		216		262			315		390	
	BF/BAH6	mm	140	82.563	170	106.375	220	106.375	139.719	220	139.719	300	196.869
	C	mm	104.8		133.4		171.4		171.4	171.4		235	
	CA	mm	-	-	-	-	-	133.4	-	-	-	-	-
	D	mm	11.5		13.5		17	13.5	17	17		21	
	E	mm	32		42		48			48		75	
	F2	mm	M24 x 2		M32 x 1.5		M38 x 1.5			M38 x 1.5		M60 x 1.5	
	G H8	mm	25		33		39			39		61	
	HF/HA	mm	68	78	81	93	92	111	106	101	115	112	127
	K	mm	18.5		20		25			25		48	
	L	mm	23		32		38			38		54	
	M	mm	M10 x 1.0		M22 x 1.5		M28 x 1.5			M28 x 1.5		M52 x 1.5	
	N H9	mm	15		24		34			34		60	
	Q	mm	4.5		5.5		5.5			5.5		9	
Chuck open	R1	mm	86.5		108		131			157.5		195	
max./min.	S	mm	21/4		26/4		28/4			34/4		37/4	
Jaw stroke	U	mm	3.6		4.6		5			6.3		7	
	W	mm	22		26		26			26		38	
	YF/YA	mm	5	15	5	17	5	24	19	5	19	6	21
Max./min.	Z	mm	17/0		22/0		24/0			30/0		33/0	
	a	mm	3		3		3			3		3	
Min.	b	mm	8.5		12		14			16.5		31	
Min.	c	mm	9		13		14			16		38	
AP-D	d	inch	1/16" x 90°		1/16" x 90°		1/16" x 90°			1/16" x 90°		3/32" x 90° (1)	
AP-M	d	mm	1.5 x 60°		1.5 x 60°		1.5 x 60°			1.5 x 60°		1.5 x 60°	
	e	mm	67		82		102			123		144	
	f	mm	3		3		3			3		6	
	g	mm	2.5		2.5		2.5			3.5		3.5	
	j	mm	34		46		48			58		63	
	k1	mm	10		11		12			12		14	
AP-D	l1	mm	16.5		23		30			30		38	
AP-M	l1	mm	20		25		30			30		38	
Max./min.	l2	mm	43/24		53/33		70/41			84/43		98/54	
AP-D	m	mm	M10		M12		M12			M16		M20	
AP-M	m	mm	M10		M12		M12			M16		M20	
AP-D	n g6	mm	14		17		17			21		25.5	
AP-M	n g6	mm	12		14		16			21		22	
	p1	mm	16		16		21			21		37.5	
	p2	mm	-		-		-			60		80	
	p3	mm	38		49		55			62.5		83	
	p4	mm	-		80		70			80		110	
	p5	mm	65		80		102			102		140	
	p6	mm	70		-		102			120		155	
	p7	mm	-		-		-			135		170	
	p8	mm	-		-		-			-		170	
	q1	mm	-		-		-			30		36	
	q2	mm	36		45		60			60		80	
	r1	mm	M5/7		M5/8		M6/10			M6/10		M6/12	
	r2	mm	M6/14		M8/17		M8/17			M8/17		M10/19	
	r3	mm	M8/17		M8/17		M10/19			M10/19		M12/22	
	s	mm	16		16		16			16		20	
	t	mm	5		5		5			5		5	

(1) Serration 1/16 x 90° on request

AP®-C

TONGUE & GROOVE

High precision power chucks Ø 170 - 400 mm

- Closed center
- 3 jaws
- proofline® chucks = fully sealed – low maintenance

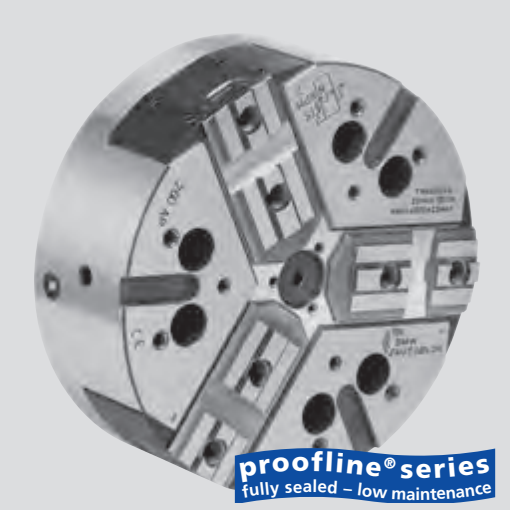

Application/customer benefits

- For large batch production
- Fully sealed, ideal for dry machining of castings and forgings or if high pressure coolant is used

AP-C: TONGUE & GROOVE master jaws (American Standard)

Technical features

- Constant gripping force with permanent grease lubrication
- Central bore for coolant and/or air
- Chuck body and internal parts case hardened
- **proofline® chucks** = fully sealed – low maintenance

Standard equipment

3-jaw chuck
Mounting bolts

Ordering example

3-jaw chuck AP-C 215/A6

Actual gripping force diagrams

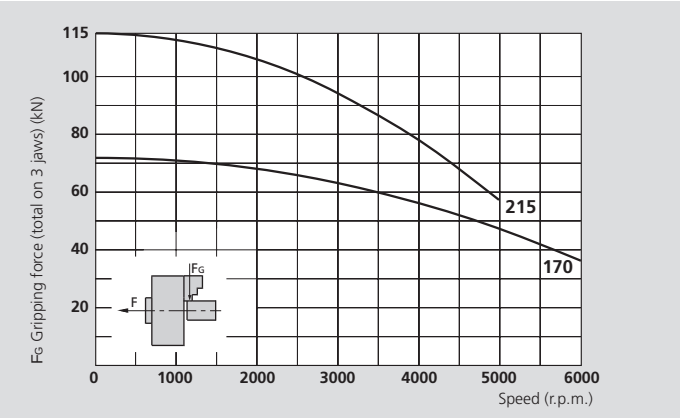

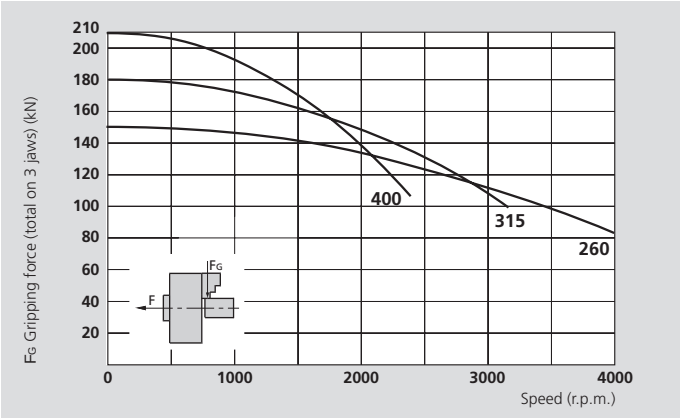

The data in the diagrams refer to 3-jaw-chucks, newly maintained according to their service manuals using SMW-AUTOBLOK K67 grease. The static and dynamic gripping forces have been measured using standard soft top jaws, placed in a position not exceeding the outer diameter of the chuck.

⚠ **Safety advice/danger of damage:**
When using taller/heavier jaws and/or clamping on a bigger diameter reduce draw pull/rotating speed accordingly.

Technical data

SMW-AUTOBLOK Type		AP-C 170	AP-C 215	AP-C 260	AP-C 315	AP-C 400
Number of jaws		**3**	**3**	**3**	**3**	**3**
Radial jaw stroke	mm	3.6	4.6	5	6.3	7
Axial piston stroke	mm	17	22	24	30	33
Max. draw pull*	kN	30	42	55	65	75
Max. gripping force*	kN	72	112	150	180	210
Max. speed	r.p.m.	6000	5000	4000	3200	2400
Weight (without top jaws)	kg	10	19.5	32.5	56	90
Moment of inertia	kg·m²	0.037	0.113	0.28	0.69	1.7
Recommended actuating cylinders	**Type**	**SIN-S 100**	**SIN-S 100/125**	**SIN-S 125/150**	**SIN-S 125/150**	**SIN-S 150/175**

* For internal clamping reduce the draw pull by 30 %.

on request:
Tooling Standard Parts Catalog

SMW-AUTOBLOK 394

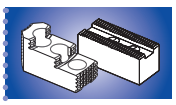

SMW-AUTOBLOK 396

SMW-AUTOBLOK 259

High precision power chucks Ø 170 - 400 mm

- Closed center
- 3 jaws
- proofline® chucks = fully sealed – low maintenance

AP®-C

TONGUE & GROOVE

1

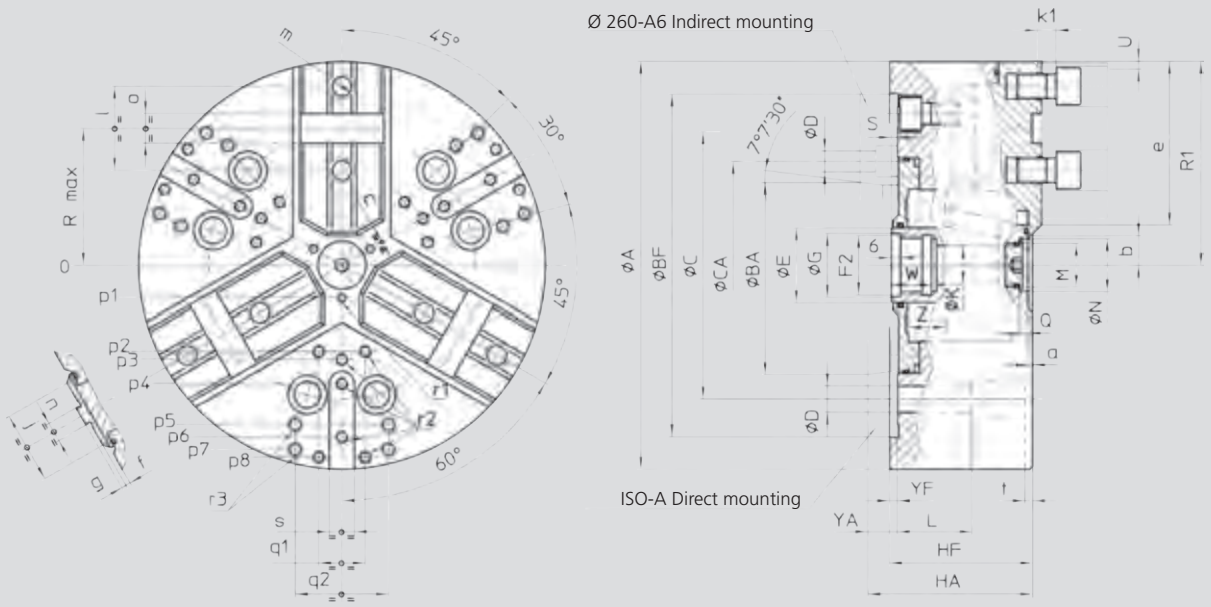

Subject to technical changes.
For more detailed information please ask our customer service.

SMW-AUTOBLOK Type			AP-C 170		AP-C 215		AP-C 260			AP-C 315		AP-C 400	
Mounting			Z140	A5	Z170	A6	Z220	A6	A8	Z220	A8	Z300	A11
	A	mm	172		216		262			315		390	
	BF/BAH6	mm	140	82.563	170	106.375	220	106.375	139.719	220	139.719	300	196.869
	C	mm	104.8		133.4		171.4		171.4	171.4		235	
	CA	mm	-	-	-	-	-	133.4	-	-	-	-	-
	D	mm	11.5		13.5		17	13.5	17	17		21	
	E	mm	32		42		48			48		75	
	F2	mm	M24 x 2		M32 x 1.5		M38 x 1.5			M38 x 1.5		M60 x 1.5	
	G H8	mm	25		33		39			39		61	
	HF/HA	mm	68	78	81	93	92	111	106	101	115	112	127
	K	mm	18.5		20		25			25		48	
	L	mm	23		32		38			38		54	
	M	mm	M10 x 1		M22 x 1.5		M28 x 1.5			M28 x 1.5		M52 x 1.5	
	N H9	mm	15		24		34			34		60	
	Q	mm	4.5		5.5		5.5			5.5		9	
Chuck open	**R1**	mm	86.5		108		131			157.5		195	
Max.	**R**	mm	56		72		88			105		133.5	
Max./min.	**S**	mm	21/4		26/4		28/4			34/4		37/4	
Radial jaw stroke	**U**	mm	3.6		4.6		5			6.3		7	
	W	mm	22		26		26			26		38	
	YF/YA	mm	5	15	5	17	5	24	19	5	19	6	21
Max./min.	**Z**	mm	17/0		22/0		24/0			30/0		33/0	
	a	mm	3		3		3			3		3	
Min.	**b**	mm	8.5		12		14			16.5		31	
Min.	**c**	mm	9		13		14			16		38	
	e	mm	70		87		107			129		150	
	f	mm	3		3		3			3		6	
	g	mm	3		3		3			3		3	
	j	mm	34		46		48			58		63	
	k1	mm	10		11		12			12		14	
	l	mm	38		44.4		54			63.5		76.2	
	m	mm	M10		M12		M16			M16		M20	
	n h8	mm	7.94		7.94		12.70			12.70		12.70	
	o H7	mm	12.68		12.68		19.03			19.03		19.03	
	p1	mm	16		16		21			21		37.5	
	p2	mm	-		-		-			60		80	
	p3	mm	38		49		55			62.5		83	
	p4	mm	-		80		70			80		110	
	p5	mm	65		80		102			102		140	
	p6	mm	70		-		102			120		155	
	p7	mm	-		-		-			135		170	
	p8	mm	-		-		-			-		170	
	q1	mm	-		-		-			30		36	
	q2	mm	36		45		60			60		80	
	r1	mm	M5/7		M5/8		M6/10			M6/10		M6/12	
	r2	mm	M6/14		M8/17		M8/17			M8/17		M10/19	
	r3	mm	M8/17		M8/17		M10/19			M10/19		M12/22	
	s	mm	16		16		16			16		20	
	t	mm	5		5		5			5		5	

APL-D

INCH SERRATION

APL-M

METRIC SERRATION

High precision power chucks Ø 215 - 400 mm

- Closed center
- Long stroke
- 3 jaws
- proofline® chucks = fully sealed – low maintenance

Application/customer benefits

- For mid to large batch production
- Fully sealed, ideal for dry machining of castings and forgings or if high pressure coolant is used
- Large clamping range

APL-D: Master jaws with INCH SERRATION (1/16" x 90°, 3/32" x 90°)
APL-M: Master jaws with METRIC SERRATION (1.5 mm x 60°)
(suitable for japanese chuck top jaws)

Technical features

- Extra long jaw stroke
- Constant gripping force with permanent grease lubrication
- Central bore for coolant and/or air
- Chuck body and internal parts case hardened
- **proofline® chucks** = fully sealed – low maintenance

Standard equipment

3-jaw chuck
1 set T-nuts and bolts
1 set soft top jaws
Mounting bolts

Ordering example

3-jaw chuck APL-D 215/A6
or
3-jaw chuck APL-M 260/Z220

Actual gripping force diagrams

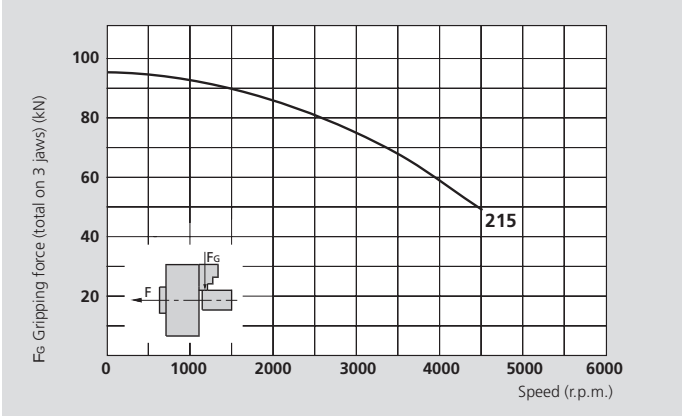

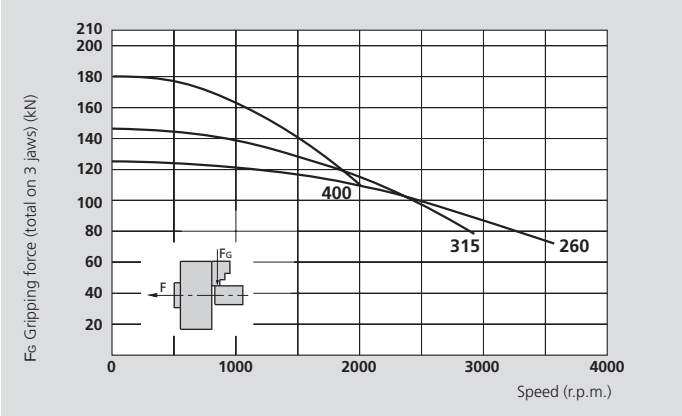

The data in the diagrams refer to 3-jaw-chucks, newly maintained according to their service manuals using SMW-AUTOBLOK K67 grease. The static and dynamic gripping forces have been measured using standard soft top jaws, placed in a position not exceeding the outer diameter of the chuck.

⚠ **Safety advice/danger of damage:**
When using taller/heavier jaws and/or clamping on a bigger diameter reduce draw pull/rotating speed accordingly.

Technical data

SMW-AUTOBLOK Type		APL-D 215 APL-M 215	APL-D 260 APL-M 260	APL-D 315 APL-M 315	APL-D 400 APL-M 400
Radial jaw stroke	mm	8.5	9.7	12.1	13.3
Axial piston stroke	mm	21	24	30	33
Max. draw pull*	kN	53	68	80	100
Max. gripping force*	kN	95	125	145	180
Max. speed	r.p.m.	4500	3600	2800	2000
Weight (without top jaws)	kg	19.5	32.5	56	90
Moment of inertia	kg·m²	0.113	0.28	0.69	1.7
Recommended actuating cylinders	**Type**	**SIN-S 100/125**	**SIN-S 125/150**	**SIN-S 125/150**	**SIN-S 150/175**

* For internal clamping reduce the draw pull by 30 %.

on request:
Tooling Standard Parts Catalog

SMW-AUTOBLOK 394

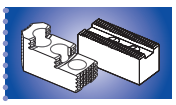

SMW-AUTOBLOK 396

SMW-AUTOBLOK 259

High precision power chucks Ø 215 - 400 mm

- Closed center
- Long stroke
- 3 jaws
- proofline® chucks = fully sealed – low maintenance

APL-D
INCH SERRATION

APL-M
METRIC SERRATION

1

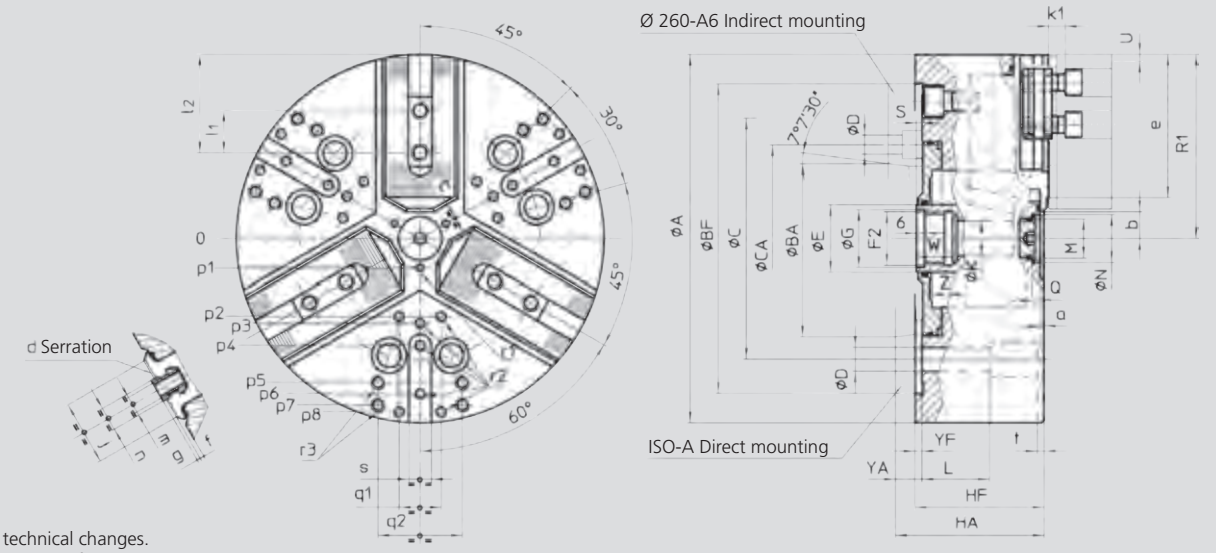

Subject to technical changes.
For more detailed information please ask our customer service.

SMW-AUTOBLOK Type			APL-D 215 APL-M 215		APL-D 260 APL-M 260			APL-D 315 APL-M 315		APL-D 400 APL-M 400	
Mounting			**Z170**	**A6**	**Z220**	**A6**	**A8**	**Z220**	**A8**	**Z300**	**A11**
	A	mm	216		262			315		390	
	BF/BA H6	mm	170	106.375	220	106.375	139.719	220	139.719	300	196.869
	C	mm	133.4		171.4		171.4	171.4		235	
	CA	mm	-	-	-	133.4	-	-	-	-	-
	D	mm	13.5		17	13.5	17	17		21	
	E	mm	42		48			48		75	
	F2	mm	M32 x 1.5		M38 x 1.5			M38 x 1.5		M60 x 1.5	
	G H8	mm	33		39			39		61	
	HF/HA	mm	81	93	92	111	106	101	115	112	127
	K	mm	20		25			25		48	
	L	mm	32		38			38		54	
	M	mm	M22 x 1.5		M28 x 1.5			M28 x 1.5		M52 x 1.5	
	N H9	mm	24		34			34		60	
	Q	mm	5.5		5.5			5.5		9	
Chuck open	**R1**	mm	112.5		136			163.5		202	
Max./min.	**S**	mm	25/4		28/4			34/4		37/4	
Radial jaw stroke	**U**	mm	8.5		9.7			12.1		13.3	
	W	mm	26		26			26		38	
	YF/YA	mm	5	17	5	24	19	5	19	6	21
Max./min.	**Z**	mm	21/0		24/0			30/0		33/0	
	a	mm	3		3			3		3	
Min.	**b**	mm	8.5		9			11		24.5	
Min.	**c**	mm	6.2		6			6		28	
APL-D	**d**	inch	1/16″ x 90°		1/16″ x 90°			1/16″ x 90°		3/32″ x 90° (1)	
APL-M	**d**	mm	1.5 x 60°		1.5 x 60°			1.5 x 60°		1.5 x 60°	
	e	mm	82.5		102			123.5		145.5	
	f	mm	3		3			3		6	
	g	mm	2.5		2.5			3.5		3.5	
	j	mm	46		48			58		63	
	k1	mm	11		12			12		14	
APL-D	**l1**	mm	23		30			30		38	
APL-M	**l1**	mm	25		30			30		38	
Max./min.	**l2**	mm	53/33		73/41			88/43		102/54	
APL-D	**m**	mm	M12		M12			M16		M20	
APL-M	**m**	mm	M12		M12			M16		M20	
APL-D	**n** h8	mm	17		17			21		25.5	
APL-M	**n** h8	mm	14		16			21		22	
	p1	mm	16		21			21		37.5	
	p2	mm	-		-			60		80	
	p3	mm	49		55			62.5		83	
	p4	mm	80		70			80		110	
	p5	mm	80		102			102		140	
	p6	mm	-		102			120		155	
	p7	mm	-		-			135		170	
	p8	mm	-		-			-		170	
	q1	mm	-		-			30		36	
	q2	mm	45		60			60		80	
	r1	mm	M5/8		M6/10			M6/10		M6/12	
	r2	mm	M8/17		M8/17			M8/17		M10/19	
	r3	mm	M8/17		M10/19			M10/19		M12/22	
	s	mm	16		16			16		20	
	t	mm	5		5			5		5	

(1) Serration 1/16 x 90° on request

APL-D

INCH SERRATION

APL-C

TONGUE & GROOVE

High precision power chucks Ø 500 - 1000 mm

- Closed center
- Long stroke
- 3 jaws
- proofline® chucks = fully sealed – low maintenance

Application/customer benefits

- For large batch production
- Fully sealed, ideal for dry machining of castings and forgings or if high pressure coolant is used
- Large clamping range

APL-D: INCH SERRATION master jaws
APL-C: TONGUE & GROOVE master jaws (American Standard)

Technical features

- Extra long jaw stroke
- Constant gripping force with permanent grease lubrication
- Center bore for coolant and/or air
- Chuck body and internal parts case hardened
- **proofline® chucks** = fully sealed – low maintenance

Standard equipment

3-jaw chuck
1 set T-nuts and bolts (no APL-C)
1 set soft top jaws (no APL-C)
Mounting bolts

Ordering example

3-jaw chuck APL-C 630 Z380

Actual gripping force diagrams

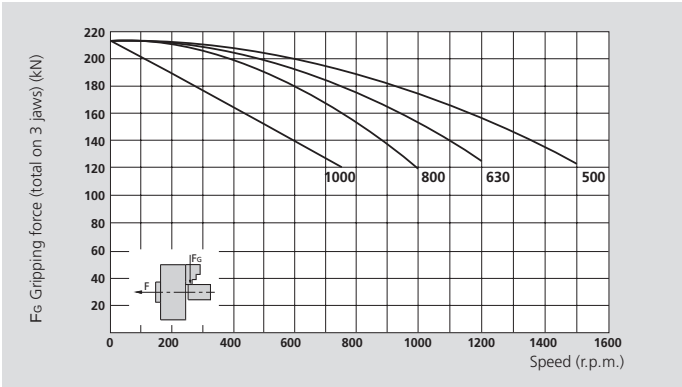

The data in the diagrams refer to 3-jaw-chucks, newly maintained according to their service manuals using SMW-AUTOBLOK K67 grease. The static and dynamic gripping forces have been measured using standard soft top jaws, placed in a position not exceeding the outer diameter of the chuck.

⚠ **Safety advice/danger of damage:**
When using taller/heavier jaws and/or clamping on a bigger diameter reduce draw pull/rotating speed accordingly.

Technical data

SMW-AUTOBLOK Type		APL-D 500 APL-C 500	APL-D 630 APL-C 630	APL-D 800 APL-C 800	APL-D 1000 APL-C 1000
Radial jaw stroke	mm	13.3	13.3	13.3	13.3
Axial piston stroke	mm	33	33	33	33
Max. draw pull*	kN	120	120	120	120
Max. gripping force*	kN	215	215	215	215
Max. speed	r.p.m.	1400	1000	800	750
Weight (without top jaws)	kg	170	297	535	840
Moment of inertia	kg·m²	5.5	14.6	44	105
Recommended actuating cylinders	**Type**	**SIN-S 175/200**	**SIN-S 175/200**	**SIN-S 175/200**	**SIN-S 175/200**

* For internal clamping reduce the draw pull by 30 %.

SMW-AUTOBLOK 394

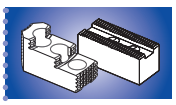
SMW-AUTOBLOK 396

SMW-AUTOBLOK 259

High precision power chucks Ø 500 - 1000 mm

- Closed center
- Long stroke
- 3 jaws
- proofline® chucks = fully sealed – low maintenance

APL-D

INCH SERRATION

APL-C

TONGUE & GROOVE

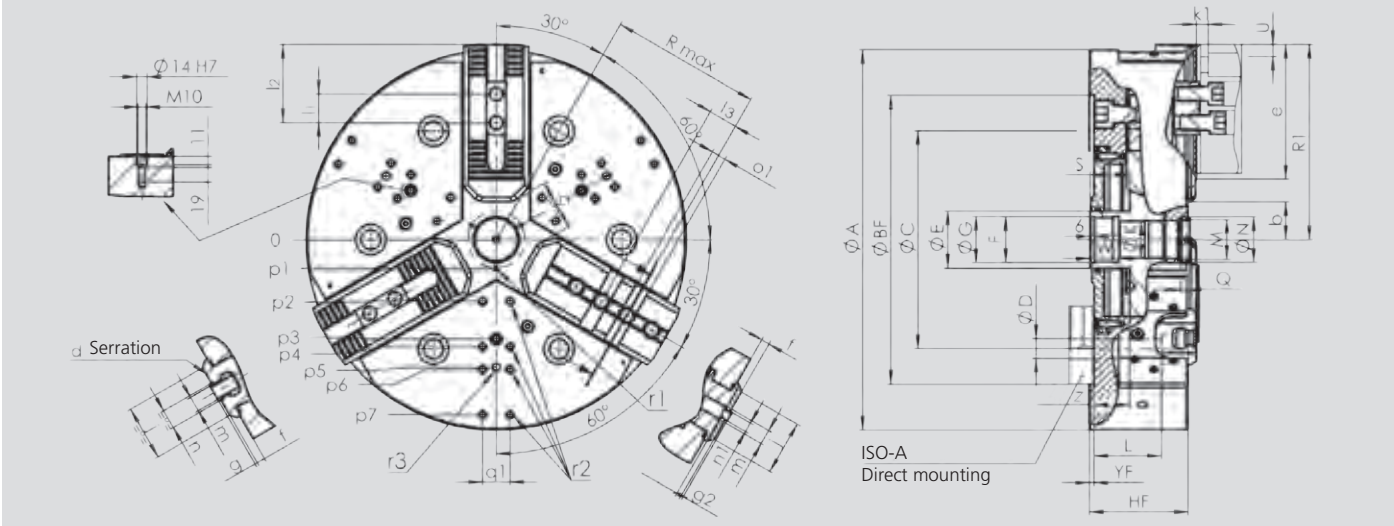

Subject to technical changes.
For more detailed information please ask our customer service.

SMW-AUTOBLOK Type			APL-D 500 APL-C 500	APL-D 630 APL-C 630	APL-D 800 APL-C 800	APL-D 1000 APL-C 1000
Mounting			**Z380**	**Z380**	**Z520**	**Z520**
	A	mm	500	630	800	1000
	BF H6	mm	380	380	520	520
	C	mm	330.2	330.2	463.6	463.6
	D	mm	26	26	26	26
	E	mm	75	75	75	75
	F	mm	M60 x 1.5	M60 x 1.5	M60 x 1.5	M60 x 1.5
	G H8	mm	61	61	61	61
	HF	mm	130	140	150	150
	K	mm	48	48	48	48
	L	mm	89	89	89	89
	M	mm	M52 x 1.5	M52 x 1.5	M52 x 1.5	M52 x 1.5
	N H8	mm	60	60	60	60
	Q	mm	7.5	7.5	7.5	7.5
Chuck open	**R1**	mm	257	322	407	507
Max.	**R**	mm	198	250	351	465
	S	mm	52	52	52	52
Jaw stroke	**U**	mm	13.3	13.3	13.3	13.3
	W	mm	38	38	38	38
Max./min.	**Z**	mm	47/14	57/24	57/24	67/34
Min.	**b**	mm	36.5	36.5	36.5	36.5
Min.	**c**	mm	42	42	42	42
	d	mm	3/32x90°	3/32x90°	3/32x90°	3/32x90°
	e	mm	177	242	327	457
	f	mm	11	11	11	11
	g	mm	3.5	3.5	3.5	3.5
	g2	mm	3	3	3	3
	g3	mm	6.5	6.5	6.5	6.5
	j	mm	72	72	72	72
	k1	mm	16	16	16	16
	l1	mm	38	38	38	38
Max./min.	**l2**	mm	145/54	210/54	295/54	393/54
	l3	mm	38.1	38.1	38.1	38.1
	m	mm	M20	M20	M20	M20
	n H8	mm	25.5	25.5	25.5	25.5
	n1 H8	mm	12.7	12.7	12.7	12.7
	o1	mm	19.03	19.03	19.03	19.03
	p1	mm	37.5	37.5	37.5	37.5
	p2	mm	80	80	-	80
	p3	mm	130	130	130	130
	p4	mm	140	170	200	170
	p5	mm	167.5	280	280	280
	p6	mm	170	-	290	260
	p7	mm	230	260	380	350
	q1	mm	36	36	36	36
	r1	mm	M6	M6	M6	M6
	r2	mm	M10	M10	M10	M10
	r3	mm	M12	M16	M16	M16
	YF	mm	6	6	6	6
Number of „o1“ cross grooves (only for APL-C)			2	3	6	9
Number of „m“ threads (only for APL-C)			4	5	8	10

APL-C

TONGUE & GROOVE

High precision power chucks Ø 215 - 400 mm

- Long stroke
- Closed center
- 3 jaws
- proofline® chucks = fully sealed – low maintenance

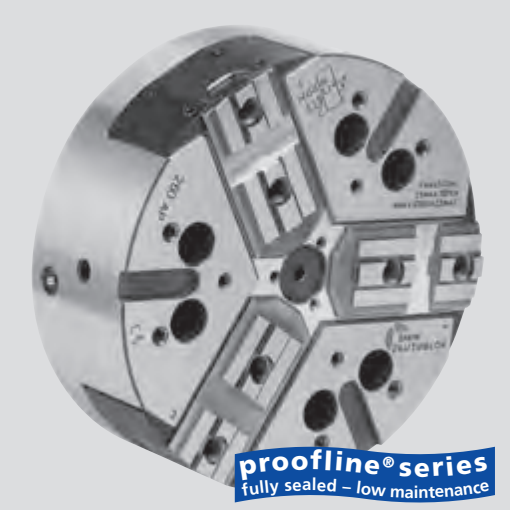

Application/customer benefits

- For large batch production
- Fully sealed, ideal for dry machining of castings and forgings or if high pressure coolant is used
- Large clamping range

APL-C: TONGUE & GROOVE master jaws (American Standard)

Technical features

- Extra long jaw stroke
- Constant gripping force with permanent grease lubrication
- Center bore for coolant and/or air
- Chuck body and internal parts case hardened
- **proofline® chucks** = fully sealed – low maintenance

Standard equipment

3-jaw chuck
Mounting bolts

Ordering example

3-jaw chuck APL-C 215/A6

Actual gripping force diagrams

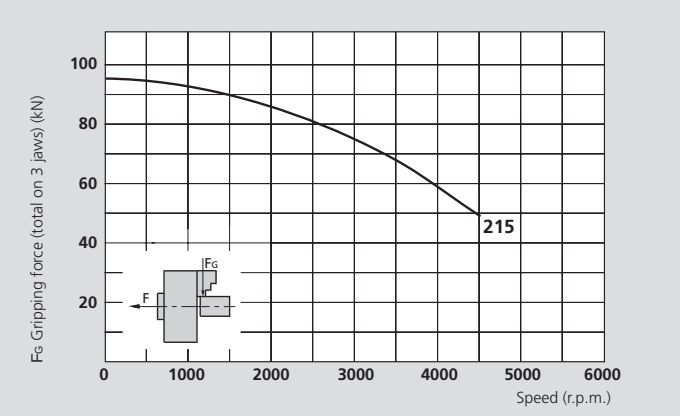

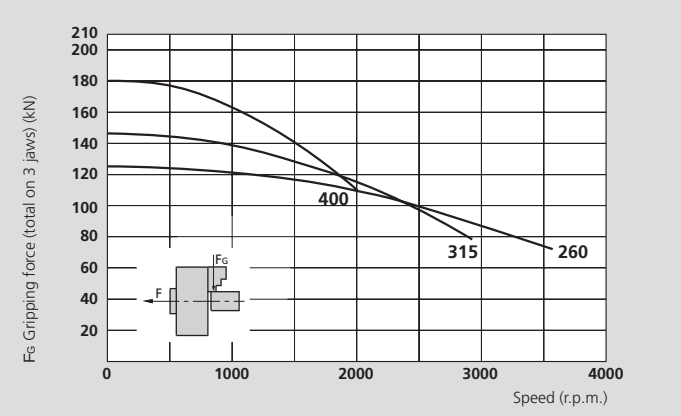

The data in the diagrams refer to 3-jaw-chucks, newly maintained according to their service manuals using SMW-AUTOBLOK K67 grease. The static and dynamic gripping forces have been measured using standard soft top jaws, placed in a position not exceeding the outer diameter of the chuck.

⚠ **Safety advice/danger of damage:**
When using taller/heavier jaws and/or clamping on a bigger diameter reduce draw pull/rotating speed accordingly.

Technical data

SMW-AUTOBLOK Type		APL-C 215	APL-C 260	APL-C 315	APL-C 400
Radial jaw stroke	mm	8.5	9.7	12.1	13.3
Axial piston stroke	mm	21	24	30	33
Max. draw pull*	kN	53	68	80	100
Max. gripping force*	kN	95	125	145	180
Max. speed	r.p.m.	4500	3600	2800	2000
Weight (without top jaws)	kg	19.5	32.5	56	90
Moment of inertia	kg·m²	0.113	0.28	0.69	1.7
Recommended actuating cylinders	**Type**	**SIN-S 100/125**	**SIN-S 125/150**	**SIN-S 125/150**	**SIN-S 150/175**

* For internal clamping reduce the draw pull by 30 %.

on request:
Tooling Standard Parts Catalog

SMW-AUTOBLOK 394

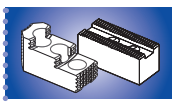

SMW-AUTOBLOK 396

SMW-AUTOBLOK 259

High precision power chucks Ø 215 - 400 mm

- Long stroke
- Closed center
- 3 jaws
- proofline® chucks = fully sealed – low maintenance

APL-C

TONGUE & GROOVE

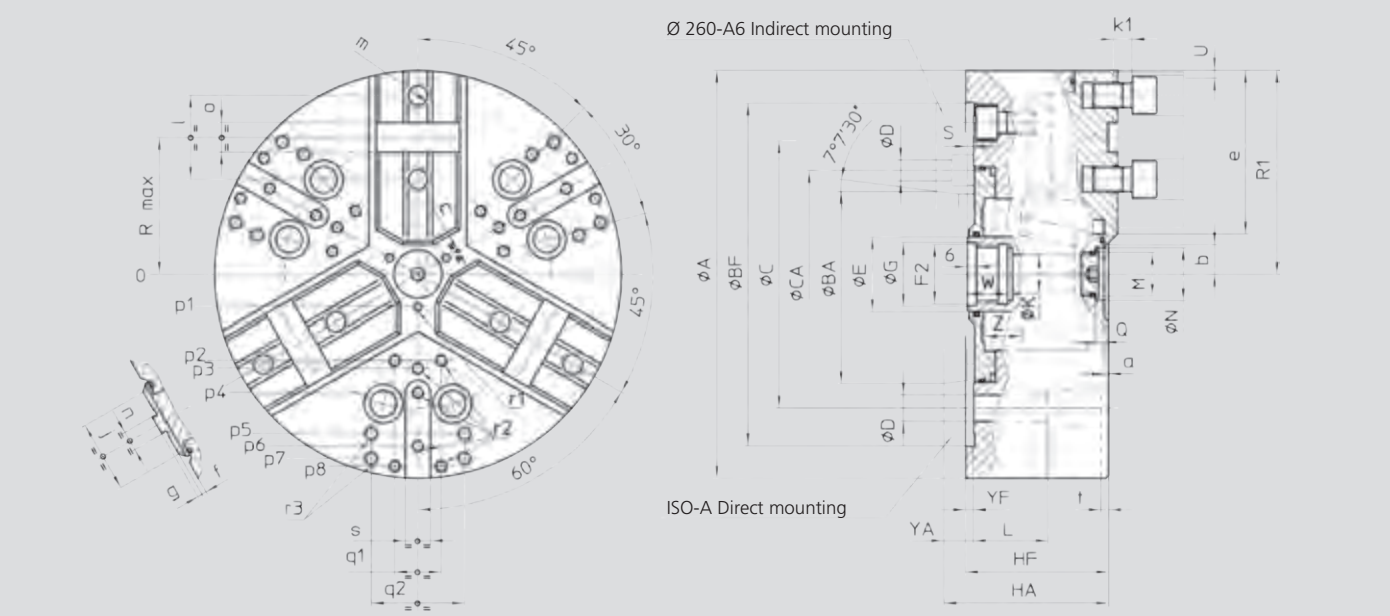

Subject to technical changes.
For more detailed information please ask our customer service.

SMW-AUTOBLOK Type			APL-C 215		APL-C 260			APL-C 315		APL-C 400	
Mounting			Z170	A6	Z220	A6	A8	Z220	A8	Z300	A11
	A	mm	216		262			315		390	
	BF/BA H6	mm	170	106.375	220	106.375	139.719	220	139.719	300	196.869
	C	mm	133.4		171.4		171.4	171.4		235	
	CA	mm	-	-	-	133.4	-	-	-	-	-
	D	mm	13.5		17	13.5	17	17		21	
	E	mm	42		48			48		75	
	F2	mm	M32 x 1.5		M38 x 1.5			M38 x 1.5		M60 x 1.5	
	G H8	mm	33		39			39		61	
	HF/HA	mm	81	93	92	111	106	101	115	112	127
	K	mm	20		25			25		48	
	L	mm	32		38			38		54	
	M	mm	M22 x 1.5		M28 x 1.5			M28 x 1.5		M52 x 1.5	
	N H9	mm	24		34			34		60	
	Q	mm	5.5		5.5			5.5		9	
Chuck open	R1	mm	112.5		136			163.5		202	
Max.	R	mm	76		92.5			111		139	
Max./min.	S	mm	25/4		28/4			34/4		37/4	
Radial jaw stroke	U	mm	8.5		9.7			12.1		13.3	
	W	mm	26		26			26		38	
	YF/YA	mm	5	17	5	24	19	5	19	6	21
Max./min.	Z	mm	21/0		24/0			30/0		33/0	
	a	mm	3		3			3		3	
Min.	b	mm	8.5		9			11		24.5	
Min.	c	mm	6.2		6			6		28	
	e	mm	87		107			129		150	
	f	mm	3		3			3		6	
	g	mm	3		3			3		3	
	j	mm	46		48			58		63	
	k1	mm	11		12			12		14	
	l	mm	44.4		54			63.5		76.2	
	m	mm	M12		M16			M16		M20	
	n h8	mm	7.94		12.70			12.70		12.70	
	o H7	mm	12.68		19.03			19.03		19.03	
	p1	mm	16		21			21		37.5	
	p2	mm	-		-			60		80	
	p3	mm	49		55			62.5		83	
	p4	mm	80		70			80		110	
	p5	mm	80		102			102		140	
	p6	mm	-		102			120		155	
	p7	mm	-		-			135		170	
	p8	mm	-		-			-		170	
	q1	mm	-		-			30		36	
	q2	mm	45		60			60		80	
	r1	mm	M5/8		M6/10			M6/10		M6/12	
	r2	mm	M8/17		M8/17			M8/17		M10/19	
	r3	mm	M8/17		M10/19			M10/19		M12/22	
	s	mm	16		16			16		20	
	t	mm	5		5			5		5	

NT-C

TONGUE & GROOVE

High precision power chucks Ø 170 - 400 mm

- Centrifugal force compensation
- Closed center
- 3 jaws
- proofline® chucks = fully sealed – low maintenance

Application/customer benefits

- For large batch production
- For high speed machining and for fragile parts
- Fully sealed, ideal for dry machining of castings and forgings or if high pressure coolant is used

NT-C: TONGUE & GROOVE master jaws (American Standard)

Technical features

- Centrifugal force compensation
- Constant gripping force with permanent grease lubrication
- Center bore for coolant and/or air
- Chuck body and internal parts case hardened
- **proofline® chucks** = fully sealed – low maintenance

Standard equipment

3-jaw chuck
Mounting bolts

Ordering example

3-jaw chuck NT-C 215/A6

Actual gripping force diagrams

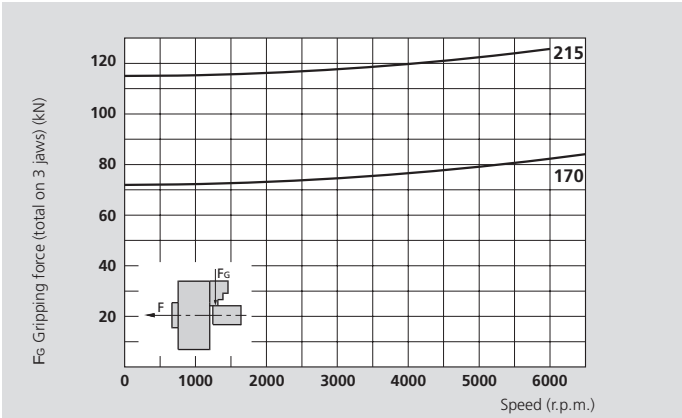

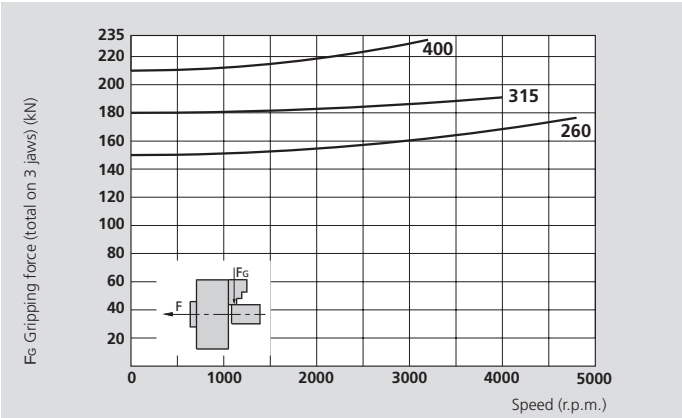

The data in the diagrams refer to 3-jaw-chucks, newly maintained according to their service manuals using SMW-AUTOBLOK K67 grease. The static and dynamic gripping forces have been measured using standard soft top jaws, placed in a position not exceeding the outer diameter of the chuck.

⚠ **Safety advice/danger of damage:**
When using taller/heavier jaws and/or clamping on a bigger diameter reduce draw pull/rotating speed accordingly.

Technical data

SMW-AUTOBLOK Type		NT-C 170	NT-C 215	NT-C 260	NT-C 315	NT-C 400
Number of jaws		**3**	**3**	**3**	**3**	**3**
Radial jaw stroke	mm	3.6	4.6	5	6.3	7
Axial piston stroke	mm	17	22	24	30	33
Max. draw pull*	kN	30	42	55	65	75
Max. gripping force*	kN	72	112	150	180	210
Max. speed	r.p.m.	6500	6000	4800	4000	3200
Weight (without top jaws)	kg	13	25	40	68	112
Moment of inertia	kg·m²	0.048	0.146	0.34	0.84	2.15
Recommended actuating cylinders	**Type**	**SIN-S 100**	**SIN-S 100/125**	**SIN-S 125/150**	**SIN-S 125/150**	**SIN-S 150/175**

* For internal clamping reduce the draw pull by 30 %.

on request:
Tooling Standard Parts Catalog

SMW-AUTOBLOK 394

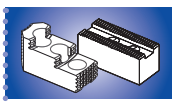

SMW-AUTOBLOK 396

SMW-AUTOBLOK 259

High precision power chucks Ø 170 - 400 mm

- Centrifugal force compensation
- Closed center
- 3 jaws
- proofline® chucks = fully sealed – low maintenance

NT-C

TONGUE & GROOVE

1

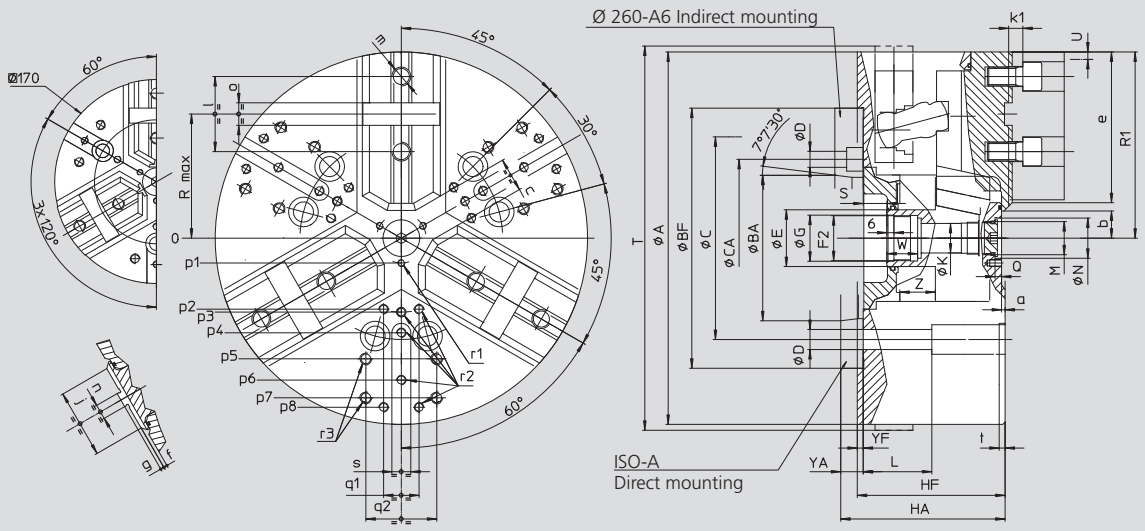

Subject to technical changes.
For more detailed information please ask our customer service.

SMW-AUTOBLOK Type			NT-C 170		NT-C 215		NT-C 260			NT-C 315		NT-C 400	
Mounting			Z140	A5	Z170	A6	Z220	A6	A8	Z220	A8	Z300	A11
	A	mm	172		216		262			315		390	
	BF/BAH6	mm	140	82.563	170	106.375	220	106.375	139.719	220	139.719	300	196.869
	C	mm	104.8		133.4		171.4	-	171.4	171.4		235	
	CA	mm	-	-	-	-	-	133.4	-	-	-	-	-
	D	mm	11.5		13.5		17	13.5	17	17		21	
	E	mm	32		42		48			48		75	
	F2	mm	M24 x 2		M32 x 1.5		M38 x 1.5			M38 x 1.5		M60 x 1.5	
	G H8	mm	25		33		39			39		61	
	HF/HA	mm	92	102	104	116	118	137	132	125	139	149	164
	K	mm	18.5		20		25			25		48	
	L	mm	43		52		58			58		74	
	M	mm	M10 x 1		M22 x 1.5		M28 x 1.5			M28 x 1.5		M52 x 1.5	
	N H9	mm	15		24		34			34		60	
	Q	mm	4.5		5.5		5.5			5.5		9	
Max.	R	mm	56		72		88			105		133.5	
Chuck open	R1	mm	86.5		108		131			157.5		195	
Max./min.	S	mm	20/3		19/-3		22/-2			20/-10		33/0	
Chuck fully closed	T	mm	175		220		-			-		-	
Radial jaw stroke	U	mm	3.6		4.6		5			6.3		7	
	W	mm	22		26		26			26		38	
	YF/YA	mm	5	15	5	17	5	24	19	5	19	6	21
Max./min.	Z	mm	17/0		22/0		24/0			30/0		33/0	
	a	mm	3		3		3			3		3	
Min.	b	mm	8.5		12		14			16.5		31	
Min.	c	mm	9		13		14			16		38	
	e	mm	70		87		107			129		150	
	f	mm	3		3		3			3		6	
	g	mm	3		3		3			3		3	
	j	mm	34		46		48			58		63	
	k1	mm	10		11		12			12		14	
	l	mm	38		44.4		54			63.5		76.2	
	m	mm	M10		M12		M16			M16		M20	
	n	mm	7.94		7.94		12.7			12.7		12.7	
	o	mm	12.68		12.68		19.03			19.03		19.03	
	p1	mm	16		16		21			21		37.5	
	p2	mm	-		-		-			60		80	
	p3	mm	38		49		55			62.5		83	
	p4	mm	-		80		70			80		110	
	p5	mm	65		80		102			102		140	
	p6	mm	70		-		102			120		155	
	p7	mm	-		-		-			135		170	
	p8	mm	-		-		-			-		170	
	q1	mm	-		-		-			30		36	
	q2	mm	36		45		60			60		80	
	r1	mm	M5/7		M5/8		M6/10			M6/10		M6/12	
	r2	mm	M6/14		M8/17		M8/17			M8/17		M10/19	
	r3	mm	M8/17		M8/17		M10/19			M10/19		M12/22	
	s	mm	16		16		16			16		20	
	t	mm	5		5		5			5		5	

NT-D

INCH SERRATION

NT-M

METRIC SERRATION

High precision power chucks Ø 170 - 400 mm

- Centrifugal force compensation
- Closed center
- 3 jaws
- proofline® chucks = fully sealed – low maintenance

Application/customer benefits

- For mid to large batch production/high speed machining and for fragile parts
- Fully sealed, ideal for dry machining of castings and forgings or if high pressure coolant is used

NT-D: Master jaws with INCH SERRATION (1/16" x 90°, 3/32" x 90°)
NT-M: Master jaws with METRIC SERRATION (1.5 mm x 60°) (suitable for japanese chuck top jaws)

Technical features

- Centrifugal force compensation
- Constant gripping force with permanent grease lubrication
- Center bore for coolant and/or air
- Chuck body and internal parts case hardened
- **proofline® chucks** = fully sealed – low maintenance

Standard equipment

3-jaw chuck
1 set T-nuts and bolts
1 set soft top jaws

Ordering example

3-jaw chuck NT-D 215/A6
or
3-jaw chuck NT-M 260/Z220

Actual gripping force diagrams

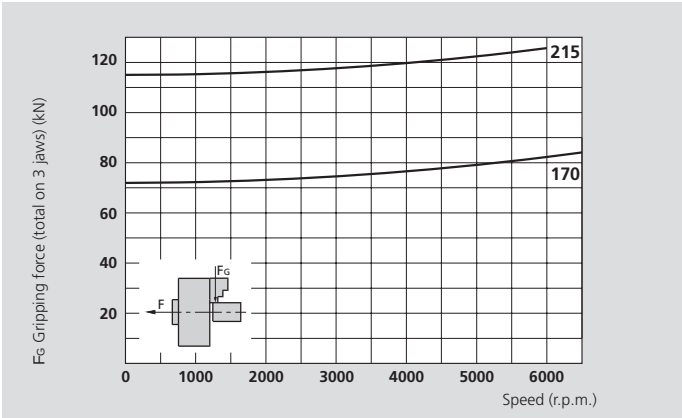

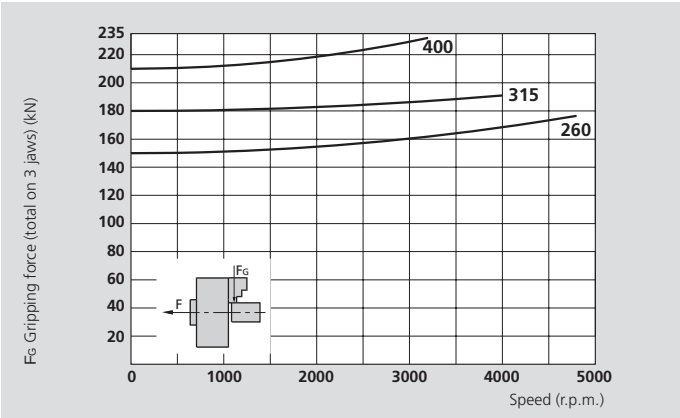

The data in the diagrams refer to 3-jaw-chucks, newly maintained according to their service manuals using SMW-AUTOBLOK K67 grease. The static and dynamic gripping forces have been measured using standard soft top jaws, placed in a position not exceeding the outer diameter of the chuck.

⚠ **Safety advice/danger of damage:**
When using taller/heavier jaws and/or clamping on a bigger diameter reduce draw pull/rotating speed accordingly.

Technical data

SMW-AUTOBLOK Type		NT-D 170 NT-M 170	NT-D 215 NT-M 215	NT-D 260 NT-M 260	NT-D 315 NT-M 315	NT-D 400 NT-M 400
Number of jaws		**3**	**3**	**3**	**3**	**3**
Radial jaw stroke	mm	3.6	4.6	5	6.3	7
Axial piston stroke	mm	17	22	24	30	33
Max. draw pull*	kN	30	42	55	65	75
Max. gripping force*	kN	72	112	150	180	210
Max. speed	r.p.m.	6500	6000	4800	4000	3200
Weight (without top jaws)	kg	13	25	40	68	112
Moment of inertia	kg·m²	0.048	0.146	0.34	0.84	2.15
Recommended actuating cylinders	**Type**	**SIN-S 100**	**SIN-S 100/125**	**SIN-S 125/150**	**SIN-S 125/150**	**SIN-S 150/175**

* For internal clamping reduce the draw pull by 30 %.

on request:
Tooling Standard Parts Catalog

SMW-AUTOBLOK 394

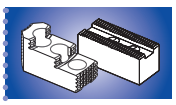

SMW-AUTOBLOK 396

SMW-AUTOBLOK 259

High precision power chucks Ø 170 - 400 mm

- Centrifugal force compensation
- Closed center
- 3 jaws
- proofline® chucks = fully sealed – low maintenance

NT-D
INCH SERRATION

NT-M
METRIC SERRATION

1

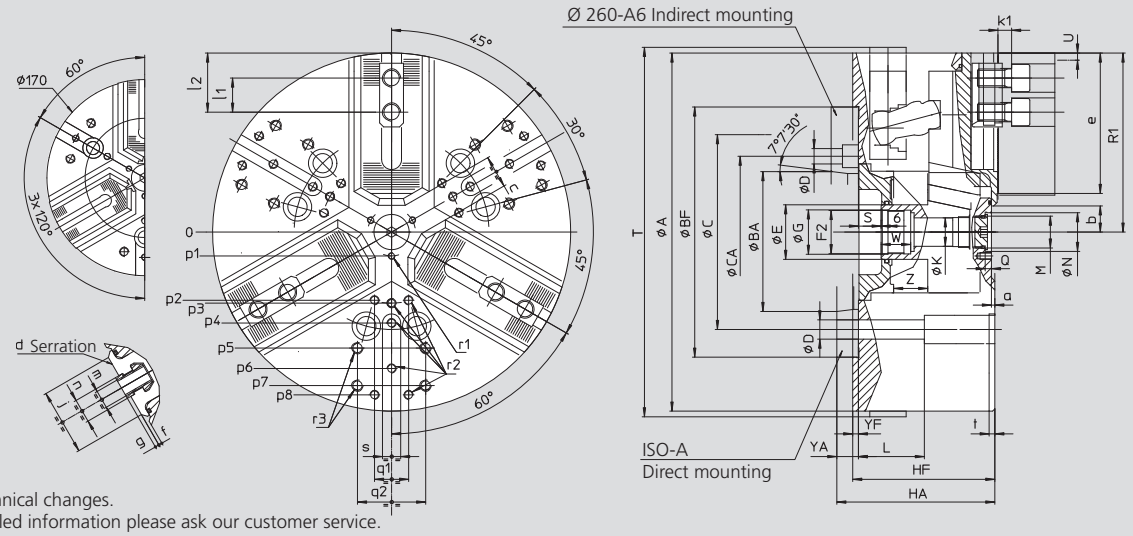

Subject to technical changes.
For more detailed information please ask our customer service.

SMW-AUTOBLOK Type			NT-D 170 NT-M 170		NT-D 215 NT-M 215		NT-D 260 NT-M 260			NT-D 315 NT-M 315		NT-D 400 NT-M 400	
Mounting			Z140	A5	Z170	A6	Z220	A6	A8	Z220	A8	Z300	A11
	A	mm	172		216		262			315		390	
	BF/BAH6	mm	140	82.563	170	106.375	220	106.375	139.719	220	139.719	300	196.869
	C	mm	104.8		133.4		171.4	-	171.4	171.4		235	
	CA	mm	-	-	-	-	-	133.4	-	-	-	-	-
	D	mm	11.5		13.5		17	13.5	17	17		21	
	E	mm	32		42		48			48		75	
	F2	mm	M24 x 2		M32 x 1.5		M38 x 1.5			M38 x 1.5		M60 x 1.5	
	G H8	mm	25		33		39			39		61	
	HF/HA	mm	92	102	104	116	118	137	132	125	139	149	164
	K	mm	18.5		20		25			25		48	
	L	mm	43		52		58			58		74	
	M	mm	M10 x 1		M22 x 1.5		M28 x 1.5			M28 x 1.5		M52 x 1.5	
	N H9	mm	15		24		34			34		60	
	Q	mm	4.5		5.5		5.5			5.5		9	
Chuck open	R1	mm	86.5		108		131			157.5		195	
Max./min.	S	mm	20/3		19/-3		22/-2			20/-10		33/0	
Chuck fully closed	T	mm	175		220		-			-		-	
Radial jaw stroke	U	mm	3.6		4.6		5			6.3		7	
	W	mm	22		26		26			26		38	
	YF/YA	mm	5	15	5	17	5	24	19	5	19	6	21
Max./min.	Z	mm	17/0		22/0		24/0			30/0		33/0	
	a	mm	3		3		3			3		3	
Min.	b	mm	8.5		12		14			16.5		31	
Min.	c	mm	9		13		14			16		38	
NT-D serration	d	inch	1/16″ x 90°		1/16″ x 90°		1/16″ x 90°			1/16″ x 90°		3/32″ x 90° (1)	
NT-M serration	d	mm	1.5 x 60°		1.5 x 60°		1.5 x 60°			1.5 x 60°		1.5 x 60°	
	e	mm	67		82		102			123		144	
	f	mm	3		3		3			3		6	
	g	mm	2.5		2.5		2.5			3.5		3.5	
	j	mm	34		46		48			58		63	
	k1	mm	10		11		12			12		14	
NT-D	l1	mm	16.5		23		30			30		38	
NT-M	l1	mm	20		25		30			30		38	
	l2	mm	43/24		53/33		70/41			84/43		98/54	
NT-D	m	mm	M10		M12		M12			M16		M20	
NT-M	m	mm	M10		M12		M12			M16		M20	
NT-D	n	mm	14		17		17			21		25.5	
NT-M	n	mm	12		14		16			21		22	
	p1	mm	16		16		21			21		37.5	
	p2	mm	-		-		-			60		80	
	p3	mm	38		49		55			62.5		83	
	p4	mm	-		80		70			80		110	
	p5	mm	65		80		102			102		140	
	p6	mm	70		-		102			120		155	
	p7	mm	-		-		-			135		170	
	p8	mm	-		-		-			-		170	
	q1	mm	-		-		-			30		36	
	q2	mm	36		45		60			60		80	
	r1	mm	M5/7		M5/8		M6/10			M6/10		M6/12	
	r2	mm	M6/14		M8/17		M8/17			M8/17		M10/19	
	r3	mm	M8/17		M8/17		M10/19			M10/19		M12/22	
	s	mm	16		16		16			16		20	
	t	mm	5		5		5			5		5	

(1) Serration 1/16 x 90° on request

NTL-D

INCH SERRATION

NTL-M

METRIC SERRATION

High precision power chucks Ø 260 - 400 mm

- Centrifugal force compensation
- Closed center - 3 jaws
- Long stroke
- proofline® chucks = fully sealed – low maintenance

Application/customer benefits

- For mid to large batch production/high speed machining and for fragile parts
- Fully sealed, ideal for dry machining of castings and forgings or if high pressure coolant is used

NTL-D: Master jaws with INCH SERRATION (1/16" x 90°, 3/32" x 90°)
NTL-M: Master jaws with METRIC SERRATION (1.5 mm x 60°)
(suitable for japanese chuck top jaws)

Technical features

- Long jaw stroke
- Centrifugal force compensation
- Constant gripping force with permanent grease lubrication
- Center bore for coolant and/or air
- Chuck body and internal parts case hardened
- **proofline® chucks** = fully sealed – low maintenance

Standard equipment

3-jaw chuck
1 set T-nuts and bolts
1 set soft top jaws

Ordering example

3-jaw chuck NTL-D 260/A6
or
3-jaw chuck NTL-M 260/Z220

Actual gripping force diagram

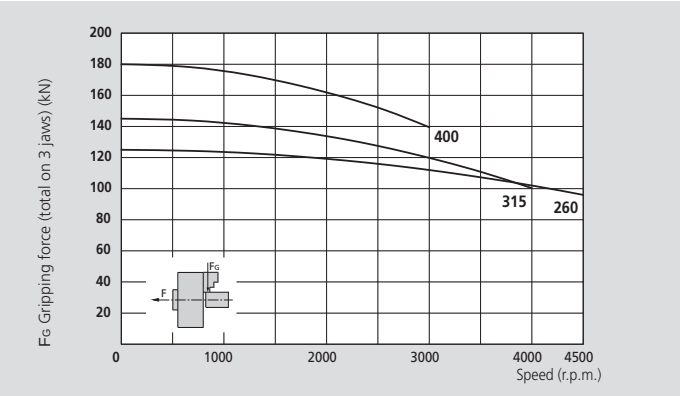

The data in the diagram refer to 3-jaw-chucks, newly maintained according to their service manuals using SMW-AUTOBLOK K67 grease. The static and dynamic gripping forces have been measured using standard soft top jaws, placed in a position not exceeding the outer diameter of the chuck.

⚠ **Safety advice/danger of damage:**
When using taller/heavier jaws and/or clamping on a bigger diameter reduce draw pull/rotating speed accordingly.

Technical data

SMW-AUTOBLOK Type		NTL-D 260 NTL-M 260	NTL-D 315 NTL-M 315	NTL-D 400 NTL-M 400
Number of jaws		**3**	**3**	**3**
Radial jaw stroke	mm	9	11	12
Axial piston stroke	mm	22.3	27.3	30
Max. draw pull*	kN	68	80	100
Max. gripping force*	kN	125	145	180
Max. speed	r.p.m.	4400	3700	3000
Weight (without top jaws)	kg	44	69	114
Moment of inertia	kg·m²	0.35	0.85	2.15
Recommended actuating cylinders	**Type**	**SIN-S 125/150**	**SIN-S 125/150**	**SIN-S 150/175**

* For internal clamping reduce the draw pull by 30 %.

on request:
Tooling Standard Parts Catalog

SMW-AUTOBLOK 394

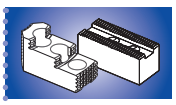

SMW-AUTOBLOK 396

SMW-AUTOBLOK 259

High precision power chucks Ø 260 - 400 mm

- Centrifugal force compensation
- Closed center - 3 jaws
- Long stroke
- proofline® chucks = fully sealed – low maintenance

NTL-D
INCH SERRATION

NTL-M
METRIC SERRATION

1

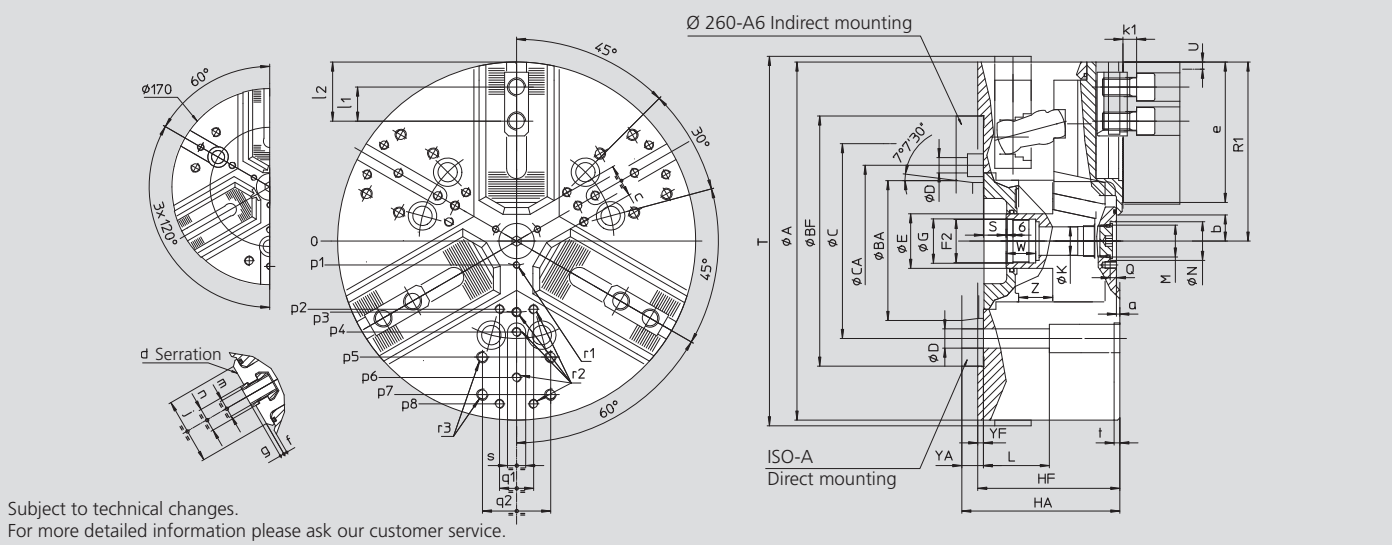

SMW-AUTOBLOK Type			NTL-D 260 NTL-M 260			NTL-D 315 NTL-M 315		NTL-D 400 NTL-M 400	
Mounting			Z220	A6	A8	Z220	A8	Z300	A11
	A	mm		262		315		390	
	BF/BA H6	mm	220	106.375	139.719	220	139.719	300	196.869
	C	mm	171.4	-	171.4	171.4		235	
	CA	mm	-	133.4	-	-	-	-	-
	D	mm	17	13.5	17	17		21	
	E	mm		48		48		75	
	F2	mm		M38 x 1.5		M38 x 1.5		M60 x 1.5	
	G H8	mm		39		39		61	
	HF/HA	mm	118	137	132	125	139	149	164
	K	mm		25		25		48	
	L	mm		58		58		74	
	M	mm		M28 x 1.5		M28 x 1.5		M52 x 1.5	
	N H9	mm		34		34		60	
	Q	mm		5.5		5.5		9	
Chuck open	R1	mm		136		163.6		202	
Max./min.	S	mm		22/-0.3		20/-7.3		33/3	
Chuck fully closed	T	mm		275		328		412	
Radial jaw stroke	U	mm		9		11		12	
	W	mm		26		26		38	
	YF/YA	mm	5	24	19	5	19	6	21
Max./min.	Z	mm		22.3/0		27.3/0		30/0	
	a	mm		3		3		3	
Min.	b	mm		10		12		26	
Min.	c	mm		7.4		7.9		30	
NTL-D serration	d	inch		1/16" x 90°		1/16" x 90°		3/32" x 90° (1)	
NTL-M serration	d	mm		1.5 x 60°		1.5 x 60°		1.5 x 60°	
	e	mm		102		123		144	
	f	mm		3		3		6	
	g	mm		2.5		3.5		3.5	
	j	mm		48		58		63	
	k1	mm		12		12		14	
NTL-D	l1	mm		30		30		38	
NTL-M	l1	mm		30		30		38	
	l2	mm		70/41		88/43		102/54	
NTL-D	m	mm		M12		M16		M20	
NTL-M	m	mm		M12		M16		M20	
NTL-D	n	mm		17		21		25.5	
NTL-M	n	mm		16		21		22	
	p1	mm		21		21		37.5	
	p2	mm		-		60		80	
	p3	mm		55		62.5		83	
	p4	mm		70		80		110	
	p5	mm		102		102		140	
	p6	mm		102		120		155	
	p7	mm		-		135		170	
	p8	mm		-		-		170	
	q1	mm		-		30		36	
	q2	mm		60		60		80	
	r1	mm		M6/10		M6/10		M6/12	
	r2	mm		M8/17		M8/17		M10/19	
	r3	mm		M10/19		M10/19		M12/22	
	s	mm		16		16		20	
	t	mm		5		5		5	

(1) Serration 1/16 x 90° on request

NTL-C

LONG STROKE
TONGUE & GROOVE

High precision power chucks Ø 260 - 400 mm

- Centrifugal force compensation
- Closed center - 3 jaws
- Long stroke
- proofline® chucks = fully sealed – low maintenance

Application/customer benefits

- For large batch production/high speed machining and for fragile parts
- Fully sealed, ideal for dry machining of castings and forgings or if high pressure coolant is used

NTL-C: TONGUE & GROOVE master jaws (American Standard)

Technical features

- Long jaw stroke
- Centrifugal force compensation
- Constant gripping force with permanent grease lubrication
- Center bore for coolant and/or air
- Chuck body and internal parts case hardened
- **proofline® chucks** = fully sealed – low maintenance

Standard equipment

3-jaw chuck
Mounting bolts

Ordering example

3-jaw chuck NTL-C 260/A6

Actual gripping force diagram

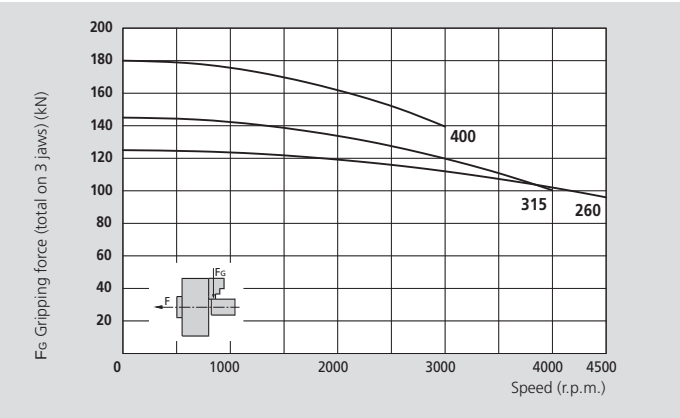

The data in the diagram refer to 3-jaw-chucks, newly maintained according to their service manuals using SMW-AUTOBLOK K67 grease.The static and dynamic gripping forces have been measured using standard soft top jaws, placed in a position not exceeding the outer diameter of the chuck.

⚠ **Safety advice/danger of damage:**
When using taller/heavier jaws and/or clamping on a bigger diameter reduce draw pull/rotating speed accordingly.

Technical data

SMW-AUTOBLOK Type		NTL-C 260	NTL-C 315	NTL-C 400
Number of jaws		**3**	**3**	**3**
Radial jaw stroke	mm	9	11	12
Axial piston stroke	mm	22.3	27.3	30
Max. draw pull*	kN	68	80	100
Max. gripping force*	kN	125	145	180
Max. speed	r.p.m.	4400	3700	3000
Weight (without top jaws)	kg	44	69	114
Moment of inertia	kg·m²	0.35	0.85	2.15
Recommended actuating cylinders	**Type**	**SIN-S 125/150**	**SIN-S 125/150**	**SIN-S 150/175**

* For internal clamping reduce the draw pull by 30 %.

on request:
Tooling Standard
Parts Catalog

SMW-AUTOBLOK
394

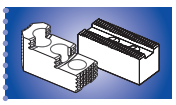

SMW-AUTOBLOK
396

SMW-AUTOBLOK
259

High precision power chucks Ø 260 - 400 mm

- Centrifugal force compensation
- Closed center - 3 jaws
- Long stroke
- proofline® chucks = fully sealed – low maintenance

NTL-C

LONG STROKE
TONGUE & GROOVE

1

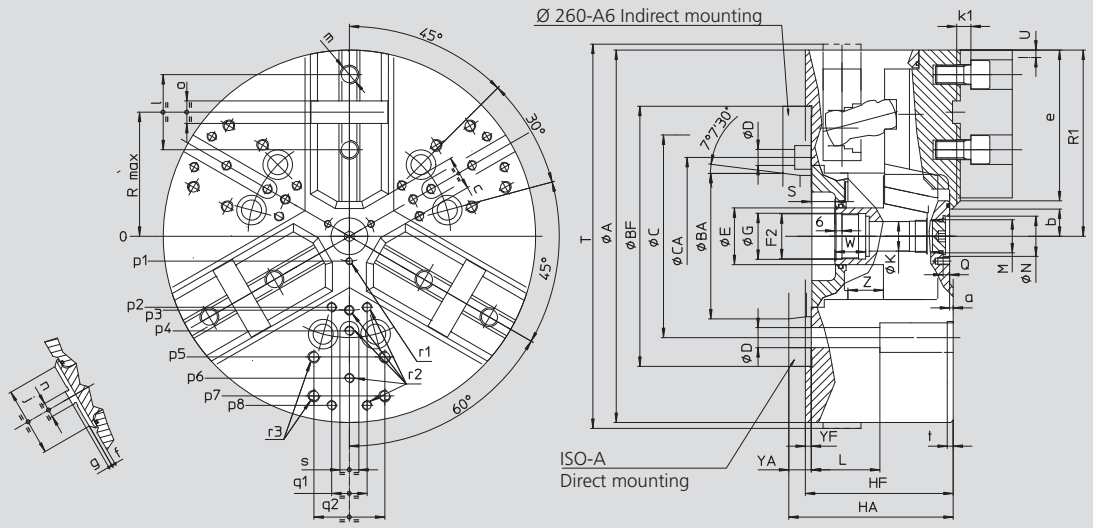

Subject to technical changes.
For more detailed information please ask our customer service.

SMW-AUTOBLOK Type			NTL-C 260			NTL-C 315		NTL-C 400	
Mounting			Z220	A6	A8	Z220	A8	Z300	A11
	A	mm		262		315		390	
	BF/BA H6	mm	220	106.375	139.719	220	139.719	300	196.869
	C	mm	171.4	-	171.4	171.4		235	
	CA	mm	-	133.4	-	-	-	-	-
	D	mm	17	13.5	17	17		21	
	E	mm		48		48		75	
	F2	mm		M38 x 1.5		M38 x 1.5		M60 x 1.5	
	G H8	mm		39		39		61	
	HF/HA	mm	118	137	132	125	139	149	164
	K	mm		25		25		48	
	L	mm		58		58		74	
	M	mm		M28 x 1.5		M28 x 1.5		M52 x 1.5	
	N H9	mm		34		34		60	
	Q	mm		5.5		5.5		9	
	R	mm		92.5		111		139	
Chuck open	R1	mm		136		163.6		202	
Max./min.	S	mm		22/-0.3		20/-7.3		33/3	
Chuck fully closed	T	mm		275		328		412	
Radial jaw stroke	U	mm		9		11		12	
	W	mm		26		26		38	
	YF/YA	mm	5	24	19	5	19	6	21
Max./min.	Z	mm		22.3/0		27.3/0		30/0	
	a	mm		3		3		3	
Min.	b	mm		10		12		26	
Min.	c	mm		7.4		7.9		30	
	e	mm		110		134		154	
	f	mm		3		3		6	
	g	mm		3		3		3	
	j	mm		48		58		63	
	k1	mm		12		12		14	
	l	mm		54		63.5		76.2	
	m	mm		M16		M16		M20	
	n	mm		12.7		12.7		12.7	
	o	mm		19.03		19.03		19.03	
	p1	mm		21		21		37.5	
	p2	mm		-		60		80	
	p3	mm		55		62.5		83	
	p4	mm		70		80		110	
	p5	mm		102		102		140	
	p6	mm		102		120		155	
	p7	mm		-		135		170	
	p8	mm		-		-		170	
	q1	mm		-		30		36	
	q2	mm		60		60		80	
	r1	mm		M6/10		M6/10		M6/12	
	r2	mm		M8/17		M8/17		M10/19	
	r3	mm		M10/19		M10/19		M12/22	
	s	mm		16		16		20	
	t	mm		5		5		5	

NTL-D

INCH
SERRATION

NTL-C

TONGUE & GROOVE

High precision power chucks Ø 500 - 1000 mm

- Centrifugal force compensation
- Closed center - 3 jaws
- Long stroke
- proofline® chucks = fully sealed – low maintenance

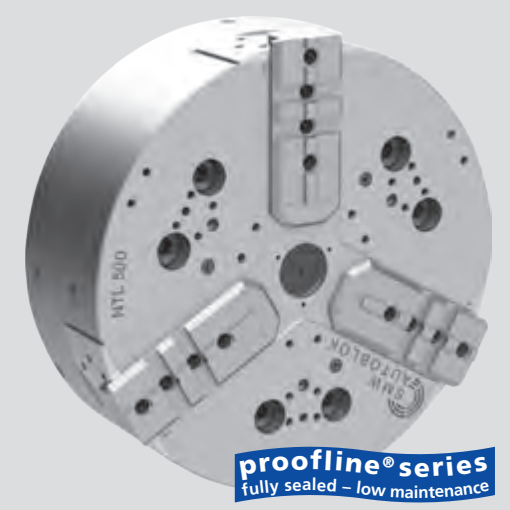

Application/customer benefits

- For mid to large batch production/high speed machining and for fragile parts
- Fully sealed, ideal for dry machining of castings and forgings or if high pressure coolant is used

NTL-D: Master jaws with INCH SERRATION (3/32" x 90°)
NTL-C: Master jaws with TONGUE & GROOVE

Technical features

- Long jaw stroke
- Centrifugal force compensation
- Constant gripping force with permanent grease lubrication
- Center bore for coolant and/or air
- Chuck body and internal parts case hardened
- **proofline® chucks** = fully sealed – low maintenance

Standard equipment

3-jaw chuck
1 set soft top jaws
Mounting bolts

Ordering example

3-jaw chuck NTL-D 500/Z380
or
3-jaw chuck NTL-C 800/Z520

Actual gripping force diagram

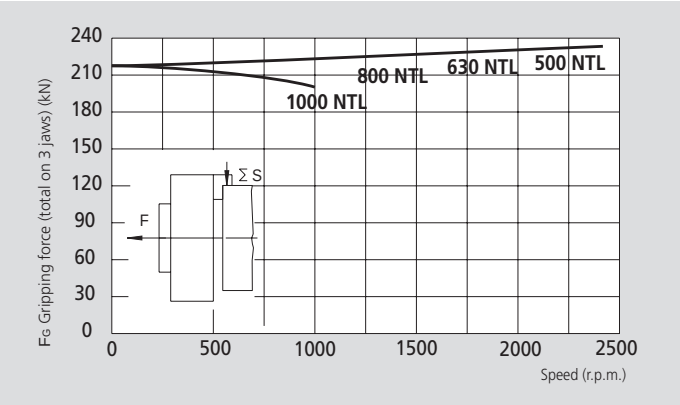

The data in the diagram refer to 3-jaw-chucks, newly maintained according to their service manuals using SMW-AUTOBLOK K67 grease. The static and dynamic gripping forces have been measured using standard soft top jaws, placed in a position not exceeding the outer diameter of the chuck.

⚠ **Safety advice/danger of damage:**
When using taller/heavier jaws and/or clamping on a bigger diameter reduce draw pull/rotating speed accordingly.

Technical data

SMW-AUTOBLOK Type		NTL-D 500 NTL-C 500	NTL-D 630 NTL-C 630	NTL-D 800 NTL-C 800	NTL-D 1000 NTL-C 1000
Radial jaw stroke	mm	12.1	12.1	12.1	12.1
Axial piston stroke	mm	30	30	30	30
Max. draw pull*	kN	120	120	120	120
Max. gripping force*	kN	215	215	215	215
Max. speed	r.p.m.	2400	2000	1500	1000
Weight (without top jaws)	kg	255	420	680	970
Moment of inertia	kg·m²	8.2	21.2	55.7	110
Recommended actuating cylinders	**Type**	**SIN-S 175/200**	**SIN-S 175/200**	**SIN-S 175/200**	**SIN-S 175/200**

* For internal clamping reduce the draw pull by 30 %.

on request:
Tooling Standard
Parts Catalog

SMW-AUTOBLOK
394

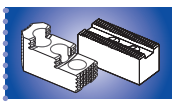

SMW-AUTOBLOK
396

SMW-AUTOBLOK
259

High precision power chucks Ø 500 - 1000 mm

- Centrifugal force compensation
- Closed center - 3 jaws
- Long stroke
- proofline® chucks = fully sealed – low maintenance

NTL-D

INCH SERRATION

NTL-C

TONGUE & GROOVE

1

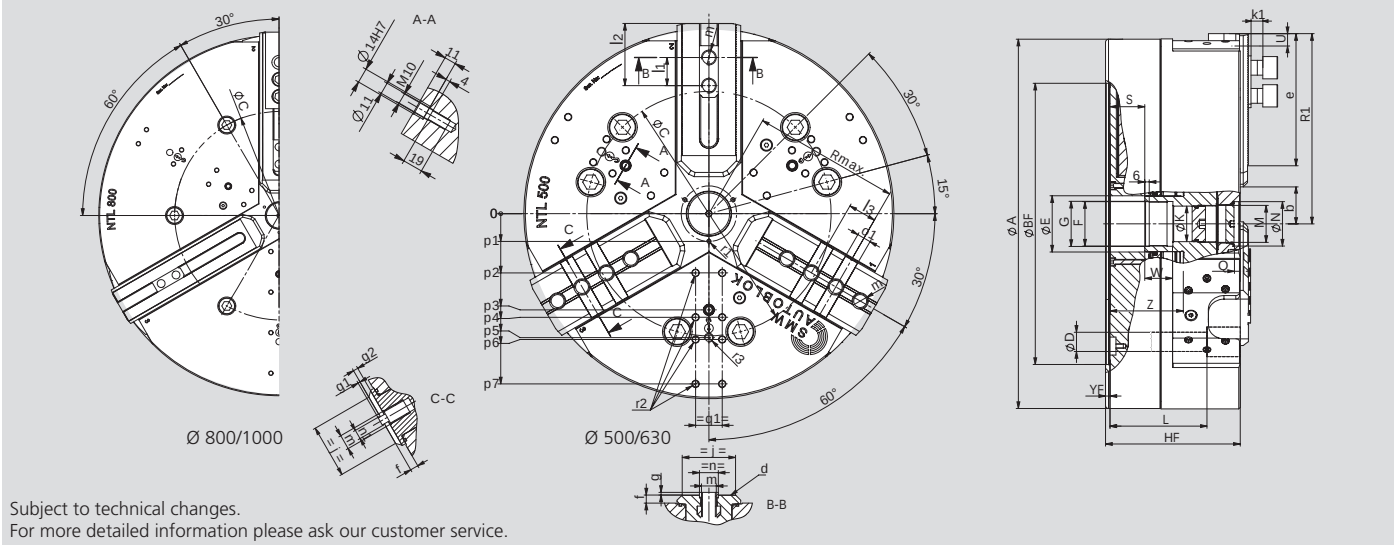

Subject to technical changes.
For more detailed information please ask our customer service.

SMW-AUTOBLOK Type				NTL-D 500 NTL-C 500	NTL-D 630 NTL-C 630	NTL-D 800 NTL-C 800	NTL-D 1000 NTL-C 1000
Mounting				**Z380**	**Z380**	**Z520**	**Z520**
	A		mm	500	630	800	1000
	BF	H6	mm	380	380	520	520
	C		mm	330.2	330.2	463.6	463.6
	D		mm	26	26	26	26
	E		mm	75	75	75	75
	F		mm	M60 x 1.5	M60 x 1.5	M60 x 1.5	M60 x 1.5
	G	H8	mm	61	61	61	61
	HF		mm	182	182	182	187
	K		mm	48	48	48	48
	L		mm	131	131	131	146
	M		mm	M52 x 1.5	M52 x 1.5	M52 x 1.5	M52 x 1.5
	N	H8	mm	60	60	60	60
	Q		mm	7.5	7.5	7.5	7.5
Chuck open	**R1**		mm	257	322	407	507
	R max.		mm	198	250	351	465
	S		mm	47	47	47	52
Jaw stroke	**U**		mm	12.1	12.1	12.1	12.1
	W		mm	38	38	38	38
Max./min.	**Z**		mm	99.5/69.5	99.5/69.5	99.5/69.5	99.5/69.5
Min.	**b**		mm	38	38	38	38
	d		mm	3/32x90°	3/32x90°	3/32x90°	3/32x90°
	e		mm	177	242	327	457
	f		mm	11	11	11	11
	g		mm	3.5	3.5	3.5	3.5
	g1		mm	3	3	3	3
	g2		mm	6.5	6.5	6.5	6.5
	j		mm	72	72	72	72
	k1		mm	16	16	16	16
	l1		mm	38	38	38	38
Max./min.	**l2**		mm	145/54	210/54	295/54	393/54
	l3		mm	38.1	38.1	38.1	38.1
	m		mm	M20	M20	M20	M20
	n	h8	mm	25.5	25.5	25.5	25.5
	n1	h8	mm	12.7	12.7	12.7	12.7
	o1	H8	mm	19.03	19.03	19.03	19.03
	p1		mm	37.5	37.5	37.5	37.5
	p2		mm	80	80	80	80
	p3		mm	130	130	130	130
	p4		mm	140	170	170	170
	p5		mm	167.5	280	280	280
	p6		mm	170	-	260	260
	p7		mm	230	260	350	350
	q1		mm	36	36	36	36
	r1		mm	M6	M6	M6	M6
	r2		mm	M10	M10	M10	M10
	r3		mm	M12	M16	M16	M16
	YF		mm	6	6	6	6
Number of 01 cross grooves (only for NTL-C)				2	3	6	9
Number of "m" threads (only for NTL-C)				4	5	8	10

IN-D

INCH SERRATION

IN-C

TONGUE & GROOVE

High precision power chucks Ø 500 - 800 mm

- Closed center
- 3 and 4 jaws

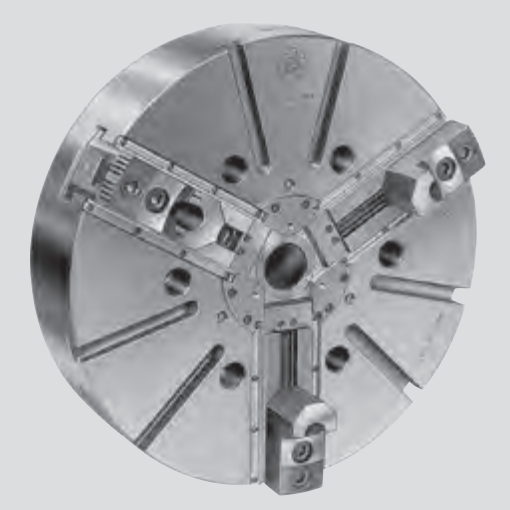

Application/customer benefits

- For large parts
- Suitable for vertical machines

IN-D: Master jaws with INCH SERRATION (3/32" x 90°)
IN-C: TONGUE & GROOVE master jaws

Technical features

- Gripping force transmission via wedge hook
- Sealed against swarf and chips

Standard equipment

3- or 4-jaw chuck
1 set T-nuts with bolts
1 set soft top jaws (not IN-C)
Mounting bolts

Ordering example

3-jaw chuck IN-D 500/A15
or
4-jaw chuck IN-C 630/Z380

Actual gripping force diagram

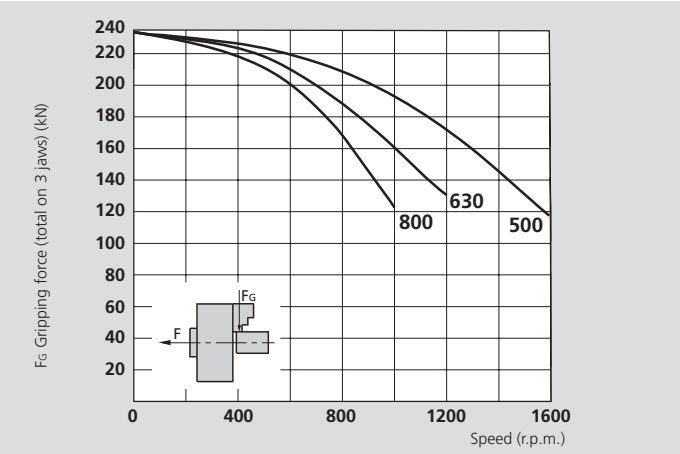

The data in the diagram refer to 3-jaw-chucks, newly maintained according to their service manuals using SMW-AUTOBLOK K05 grease. The static and dynamic gripping forces have been measured using standard soft top jaws, placed in a position not exceeding the outer diameter of the chuck.

⚠ **Safety advice/danger of damage:**
When using taller/heavier jaws and/or clamping on a bigger diameter reduce draw pull/rotating speed accordingly.

Technical data

SMW-AUTOBLOK Type		IN-D 500 IN-C 500		IN-D 630 IN-C 630		IN-D 800 IN-C 800	
Number of jaws		**3**	**4**	**3**	**4**	**3**	**4**
Radial jaw stroke	mm	8.5	8.5	10	10	10	10
Axial piston stroke	mm	32	32	38	38	38	38
Max. draw pull*	kN	100	100	100	100	100	100
Max. gripping force*	kN	240	240	240	240	240	240
Max. speed	r.p.m.	1500	1200	1100	850	900	750
Weight (without top jaws)	kg	130	180	220	325	320	550
Moment of inertia	kg·m²	4.2	5.9	10.8	16	23.8	44
Recommended actuating cylinders	**Type**	**SIN-S 150/175/200**		**SIN-S 150/175/200**		**SIN-S 150/175/200**	

* For internal clamping reduce the draw pull by 30 %.

SMW-AUTOBLOK 394

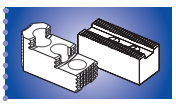

SMW-AUTOBLOK 396

SMW-AUTOBLOK 259

High precision power chucks Ø 500 - 800 mm

- Closed center
- 3 and 4 jaws

IN-D
INCH
SERRATION

IN-C
TONGUE & GROOVE

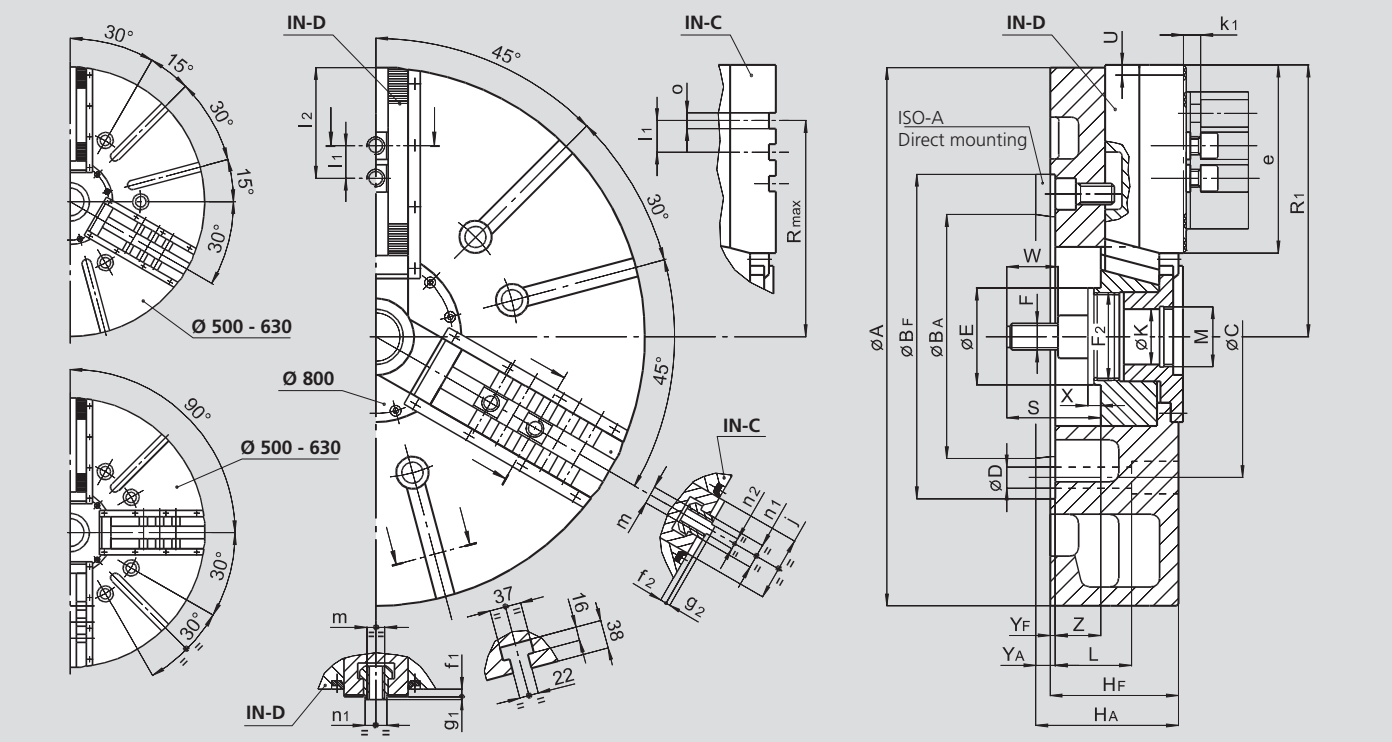

Subject to technical changes.
For more detailed information please ask our customer service.

SMW-AUTOBLOK Type			IN-D 500 IN-C 500		IN-D 630 IN-C 630		IN-D 800 IN-C 800	
Mounting			Z380	A15	Z380	A15	Z380	A15
	A	mm	510		630		800	
	BF/BAH6	mm	380	285.775	380	285.775	380	285.775
	C	mm	330.2		330.2		330.2	
	D	mm	25		25		25	
	E	mm	114		114		114	
	F	mm	M30		M30		M30	
	F2	mm	M102 x 2		M102 x 2		M102 x 2	
	HF/HA	mm	130	147	150	167	150	167
	K	mm	65		65		65	
	L	mm	89		89		89	
	M	mm	M68 x 2		M68 x 2		M68 x 2	
Chuck open	R1	mm	263		318		405	
	Rmax	mm	209.5		247.5		349	
	S	mm	110		110		110	
Stroke per jaw	U	mm	8.5		10		10	
	W	mm	60		60		60	
	X	mm	15		15		15	
	YF/YA	mm	6	23	6	23	6	23
Max./min.	Z	mm	33/1		53/15		53/15	
	e	mm	165		220		307	
	f1	mm	9		9		9	
	f2	mm	8		8		8	
	g1	mm	4		4		4	
	g2	mm	3		3		3	
	j	mm	75		75		75	
	k1	mm	16		16		16	
	l1	mm	38.1		38.1		38.1	
Max./min.	l2	mm	135/48		190/48		277/48	
	m	mm	M20		M20		M20	
	n1 h8	mm	25.5		25.5		25.5	
	n2 h8	mm	12.7		12.7		12.7	
	o H7	mm	19.03		19.03		19.03	

IL-D

INCH SERRATION

IL-C

TONGUE & GROOVE

High precision power chucks Ø 500 - 800 mm

- Closed center
- Long stroke
- 3 and 4 jaws

Application/customer benefits

- For large parts
- Suitable for vertical machines
- Long clamping stroke (possibility to clamp 1st and 2nd operation with the same jaws)

IL-D: Master jaws with INCH SERRATION (3/32" x 90°)
IL-C: TONGUE & GROOVE master jaws

Technical features

- Extra long stroke per jaw
- Gripping force transmission via wedge hook
- Sealed against swarf and chips

Standard equipment

3- or 4-jaws chuck
1 set T-nuts with bolts
1 set soft top jaws (not in IL-C)
Mounting bolts

Ordering example

3-jaw chuck IL-D 500/A15
or
4-jaw chuck IL-C 630/Z380

Actual gripping force diagram

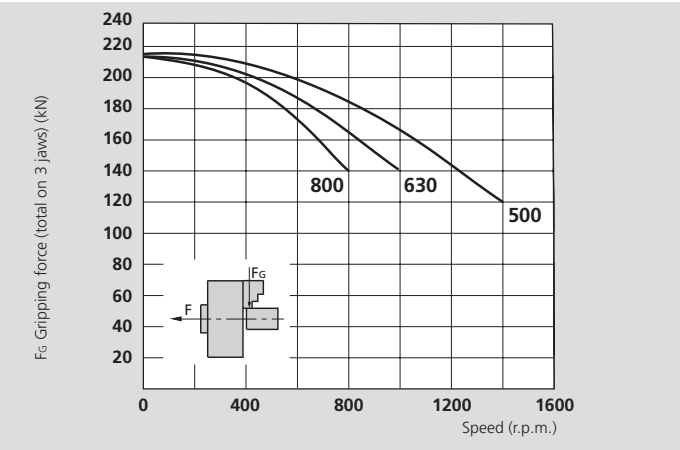

The data in the diagram refer to 3-jaw-chucks, newly maintained according to their service manuals using SMW-AUTOBLOK K05 grease. The static and dynamic gripping forces have been measured using standard soft top jaws, placed in a position not exceeding the outer diameter of the chuck.

⚠ **Safety advice/danger of damage:**
When using taller/heavier jaws and/or clamping on a bigger diameter reduce draw pull/rotating speed accordingly.

Technical data

SMW-AUTOBLOK Type		IL-D 500 IL-C 500		IL-D 630 IL-C 630		IL-D 800 IL-C 800	
Number of jaws		**3**	**4**	**3**	**4**	**3**	**4**
Radial jaw stroke	mm	13	13	15	15	15	15
Axial piston stroke	mm	33	33	38	38	38	38
Max. draw pull*	kN	120	120	120	120	120	120
Max. gripping force*	kN	215	215	215	215	215	215
Max. speed	r.p.m.	1400	1100	1000	800	800	650
Weight (without top jaws)	kg	130	180	220	325	320	550
Moment of inertia	kg·m²	4.2	5.9	10.8	16	23.8	44
Recommended actuating cylinders	**Type**	**SIN-S 150/175/200**		**SIN-S 150/175/200**		**SIN-S 150/175/200**	

* For internal clamping reduce the draw pull by 30 %.

SMW-AUTOBLOK 394

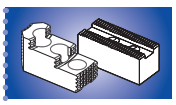

SMW-AUTOBLOK 396

SMW-AUTOBLOK 259

High precision power chucks Ø 500 - 800 mm

- Closed center
- Long stroke
- 3 and 4 jaws

IL-D

INCH SERRATION

IL-C

TONGUE & GROOVE

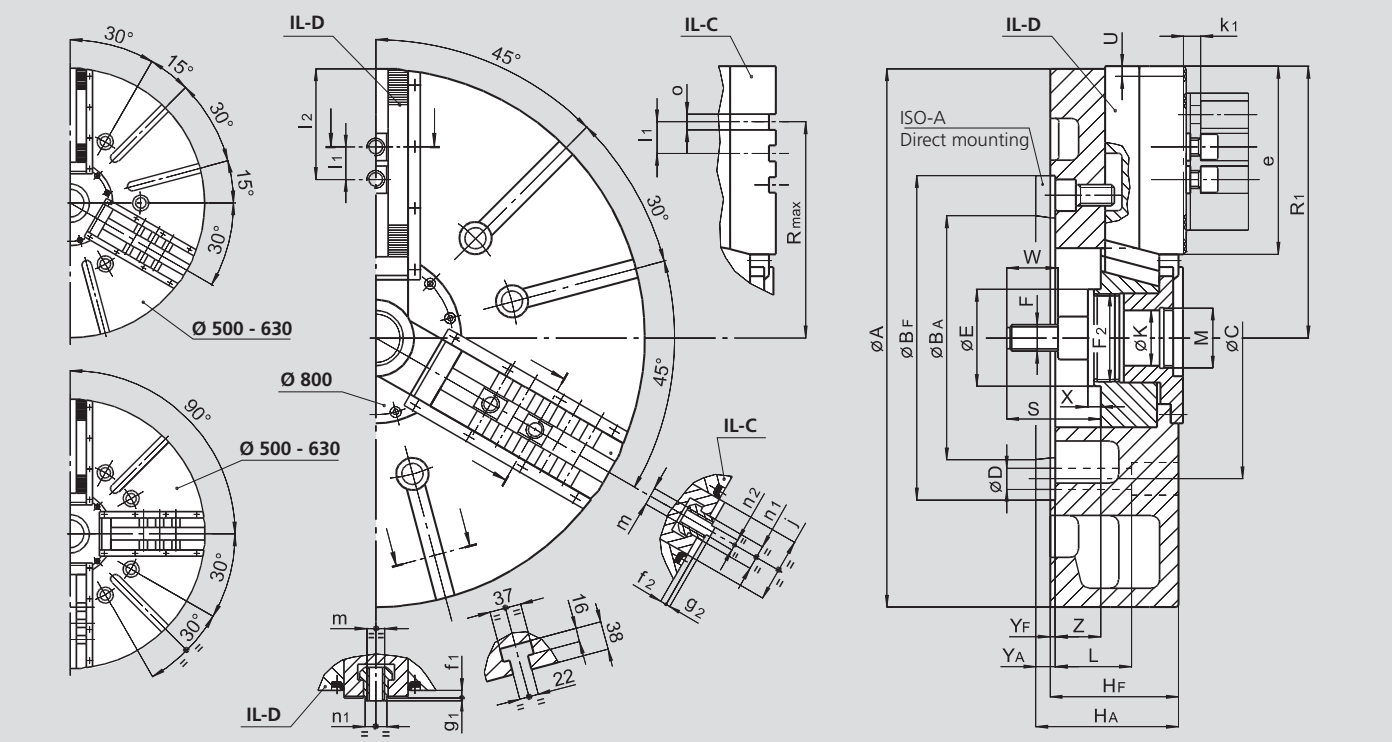

Subject to technical changes.
For more detailed information please ask our customer service.

SMW-AUTOBLOK Type			IL-D 500 IL-C 500		IL-D 630 IL-C 630		IL-D 800 IL-C 800	
Mounting			Z380	A15	Z380	A15	Z380	A15
	A	mm	510		630		800	
	BF/BA H6	mm	380	285.775	380	285.775	380	285.775
	C	mm	330.2		330.2		330.2	
	D	mm	25		25		25	
	E	mm	114		114		114	
	F	mm	M30		M30		M30	
	F2	mm	M102 x 2		M102 x 2		M102 x 2	
	HF/HA	mm	130	147	150	167	150	167
	K	mm	65		65		65	
	L	mm	89		89		89	
	M	mm	M68 x 2		M68 x 2		M68 x 2	
Chuck open	R1	mm	265		321		408	
	Rmax.	mm	212		250		352	
	S	mm	110		110		110	
Jaw stroke	U	mm	13		15		15	
	W	mm	60		60		60	
	X	mm	15		15		15	
	YF/YA	mm	6	23	6	23	6	23
Max./min.	Z	mm	33/0		53/15		53/15	
	e	mm	164		220		307	
	f1	mm	9		9		9	
	f2	mm	8		8		8	
	g1	mm	4		4		4	
	g2	mm	3		3		3	
	j	mm	75		75		75	
	k1	mm	16		16		16	
	l1	mm	38.1		38.1		38.1	
Max./min.	l2	mm	135/48		190/48		277/48	
	m	mm	M20		M20		M20	
	n1 h8	mm	25.5		25.5		25.5	
	n2 h8	mm	12.7		12.7		12.7	
	o H7	mm	19.03		19.03		19.03	

IN-D

MODULE 2
SERRATION

IL-D

LONG JAW STROKE
MODULE 2
SERRATION

High precision power chucks Ø 1000 - 1600 mm

- Closed center
- Long jaw stroke
- 3 and 6 jaws (all diameters)

Application/customer benefits

- Chucking operations of very large components
- Suitable for vertical machines thanks to the front protection of the slide ways

IN-D/ IL-D: MODULE 2 serrated master jaws (pitch 6.28 mm)
(Ø 1000 - 1600 mm)

Technical features

- Gripping force transmission via wedge hook
- Front protection of the slide ways against swarf and chips penetration

Standard equipment

3-or 6-jaws chuck
1 set T-nuts with bolts
1 set soft top jaws with cross keys
Mounting bolts
Grease gun

Ordering example

3-jaw chuck IL-D 1600/Z720
or
6-jaw chuck IL-D 1600/Z720

Actual gripping force diagrams

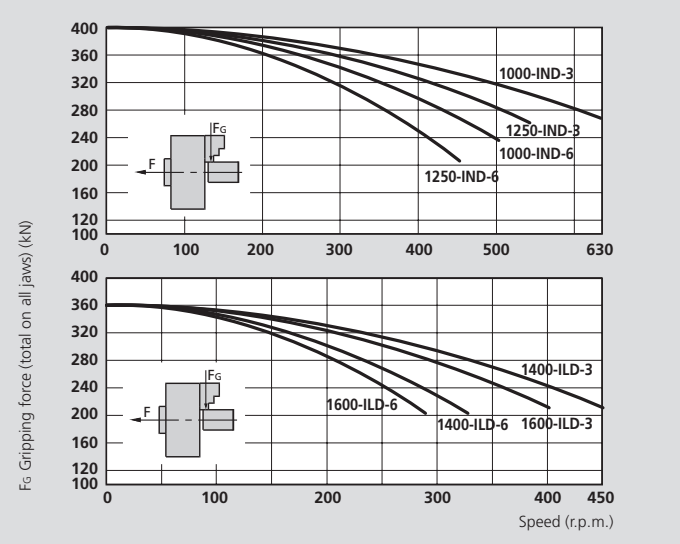

The data in the diagram refer to 3-6 jaw-chucks, newly maintained according to their service manuals using SMW-AUTOBLOK K05 grease. The static and dynamic gripping forces have been measured using standard soft top jaws, placed in a position not exceeding the outer diameter of the chuck.

Soft and hard top jaws for IN-D and IL-D

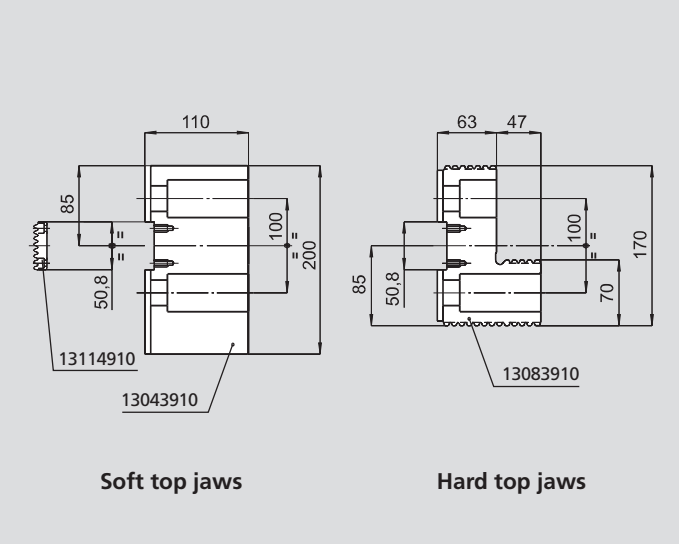

⚠ **Safety advice/danger of damage:**
When using taller/heavier jaws and/or clamping on a bigger diameter reduce draw pull/rotating speed accordingly.

Technical data

SMW-AUTOBLOK Type		IN-D 1000		IN-D 1250		IL-D 1400		IL-D 1600	
Number of jaws		**3**	**6**	**3**	**6**	**3**	**6**	**3**	**6**
Radial jaw stroke	mm	15		15		24		24	
Axial piston stroke	mm	57		57		60		60	
Max. draw pull*	kN	180		180		200		200	
Max. gripping force*	kN	400		400		360		360	
Max. speed	r.p.m.	630	500	500	450	450	320	400	280
Weight (without top jaws)	kg	600		800		1200		1600	
Moment of inertia	kg·m²	68		145		347		562	
Hard top jaw (piece)	Id. No.	13083910		13083910		13083910		13083910	
Soft top jaw (piece)	Id. No.	13043910		13043910		13043910		13043910	
Recommended actuating cylinders	**Type**	**SIN-S 250**		**SIN-S 250**		**SIN-S 250**		**SIN-S 250**	

* For internal clamping reduce the draw pull by 30 %.

SMW-AUTOBLOK
259

High precision power chucks Ø 1000 - 1600 mm

- Closed center
- Long jaw stroke
- 3 and 6 jaws (all diameters)

IN-D

MODULE 2
SERRATION

IL-D

LONG JAW STROKE
MODULE 2
SERRATION

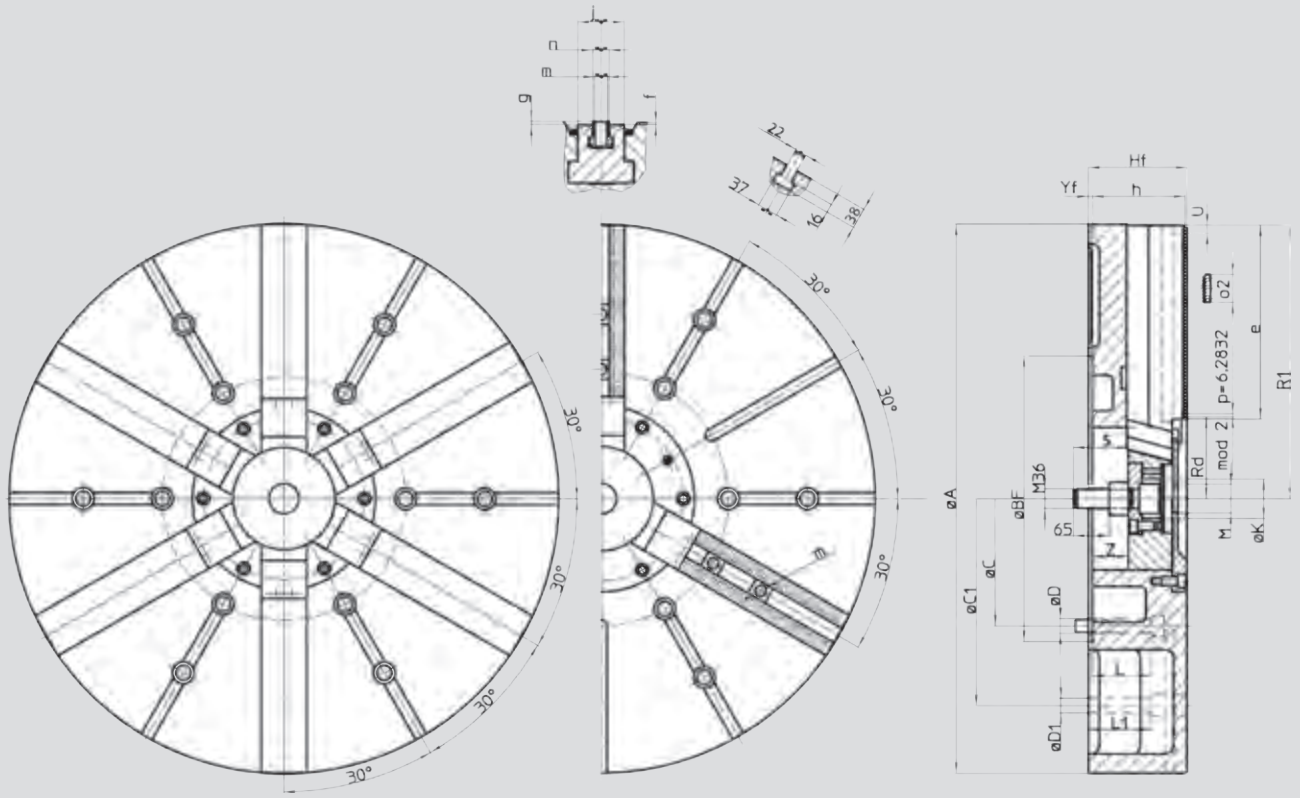

6 jaw version

3 jaw version

Subject to technical changes.
For more detailed information please ask our customer service.

SMW-AUTOBLOK Type			IN-D 1000		IN-D 1250		IL-D 1400	IL-D 1600
Mounting			Z520	A20	Z520	A20	Z720	Z720
	A	mm	1005		1250		1400	1600
	BF H6	mm	520		520		720	720
	C	mm	463.6		463.6		647.6	647.6
	C1	mm	700*		700*		1110	1110
	D	mm	27		27		33	33
	D1	mm	27*		27*		27	27
	HF	mm	184		184		222	222
	K	mm	72		72		72	72
	L	mm	108		108		179	179
	L1	mm	116*		116*		154	154
	M	mm	M52 x 1.5		M52 x 1.5		M52 x 1.5	M52 x 1.5
Chuck open	R1	mm	498		623		696	796
Chuck open	Rd	mm	148.5		148.5		179.5	179.5
Radial stroke	U	mm	15		15		24	24
	S	mm	100		100		100	100
	YF	mm	8		8		8	8
Max.	Z	mm	65		65		82	82
Min.	Z	mm	8		8		22	22
	e	mm	353		478		519	619
	f	mm	8		8		8	8
	g	mm	4		4		4	4
	h	mm	168		168		206	206
	j	mm	85		85		110	110
	m	mm	M24		M24		M24	M24
	n h8	mm	30		30		30	30
	o2 h6	mm	50.8		50.8		50.8	50.8

* On request only

IN-D

MODULE 2
SERRATION

IL-D

LONG JAW STROKE
MODULE 2
SERRATION

High precision power chucks Ø 1000 - 1600 mm

- Closed center
- Long jaw stroke
- 4 jaws (all diameters)

Application/customer benefits

- Clamping of large square and irregular shaped parts, using 2 or 4 jaws self centering
- Suitable for vertical machines thanks to the front protection of the slide ways

IN-D/IL-D: MODULE 2 SERRATED master jaws (pitch 6.28 mm)
(Ø 1000 und 1600 mm)

Technical features

- Gripping force transmission via wedge hook
- Protection from contamination with seals along the master jaw profiles
- Possibility to use jaw boxes for manual clamping mounted on the T-slots between the master jaws

Standard equipment

4-jaws chuck
1 set T-nuts with bolts
1 set soft top jaws with cross keys
Mounting bolts
Grease gun

Ordering example

4-jaw chuck IN-D 1600/Z720

Actual gripping force diagrams

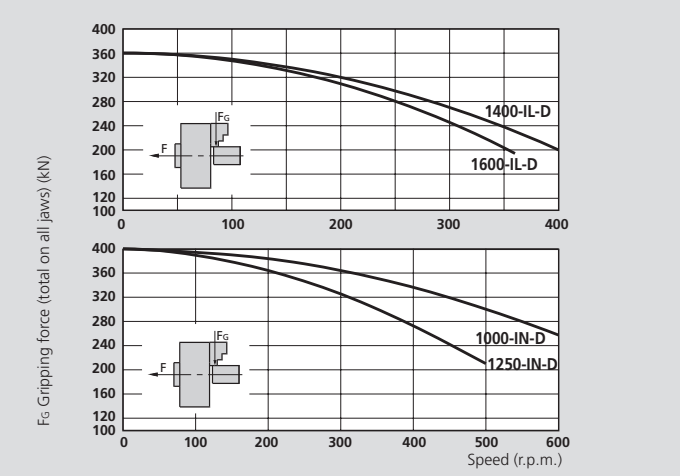

The data in the diagram refer to 4-jaw-chucks, newly maintained according to their service manuals using SMW-AUTOBLOK K05 grease. The static and dynamic gripping forces have been measured using standard soft top jaws, placed in a position not exceeding the outer diameter of the chuck.

Soft and hard top jaws for IN-D and IL-D

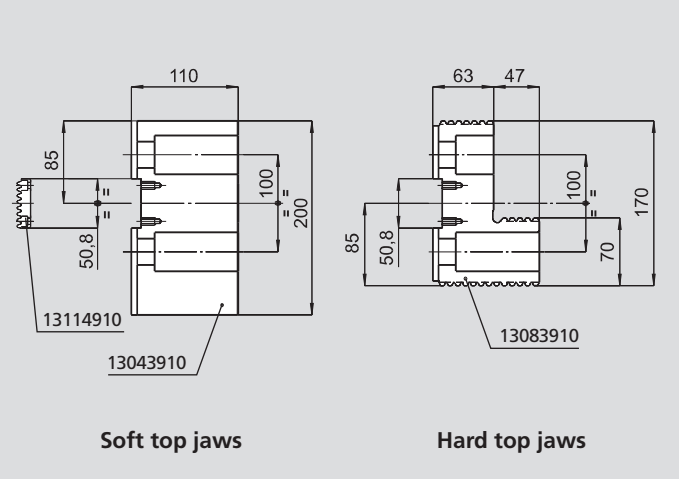

⚠ **Safety advice/danger of damage:**
When using taller/heavier jaws and/or clamping on a bigger diameter reduce draw pull/rotating speed accordingly.

Technical data

SMW-AUTOBLOK Type		IN-D 1000	IN-D 1250	IL-D 1400	IL-D 1600
Radial jaw stroke	mm	15	15	24	24
Axial piston stroke	mm	57	57	60	60
Max. draw pull*	kN	180	180	200	200
Max. gripping force*	kN	400	400	360	360
Max. speed	r.p.m.	600	500	400	360
Weight (without top jaws)	kg	660	900	1425	1765
Moment of inertia	kg·m²	84	178	347	562
Hard top jaw (piece)	Id. No.	13083910	13083910	13083910	13083910
Soft top jaw (piece)	Id. No.	13043910	13043910	13043910	13043910
Recommended actuating cylinders	**Type**	**SIN-S 250**	**SIN-S 250**	**SIN-S 250**	**SIN-S 250**

* For internal clamping reduce the draw pull by 30 %.

SMW-AUTOBLOK
259

High precision power chucks Ø 1000 - 1600 mm

- Closed center
- Long jaw stroke
- 4 jaws (all diameters)

IN-D

MODULE 2
SERRATION

IL-D

LONG JAW STROKE
MODULE 2
SERRATION

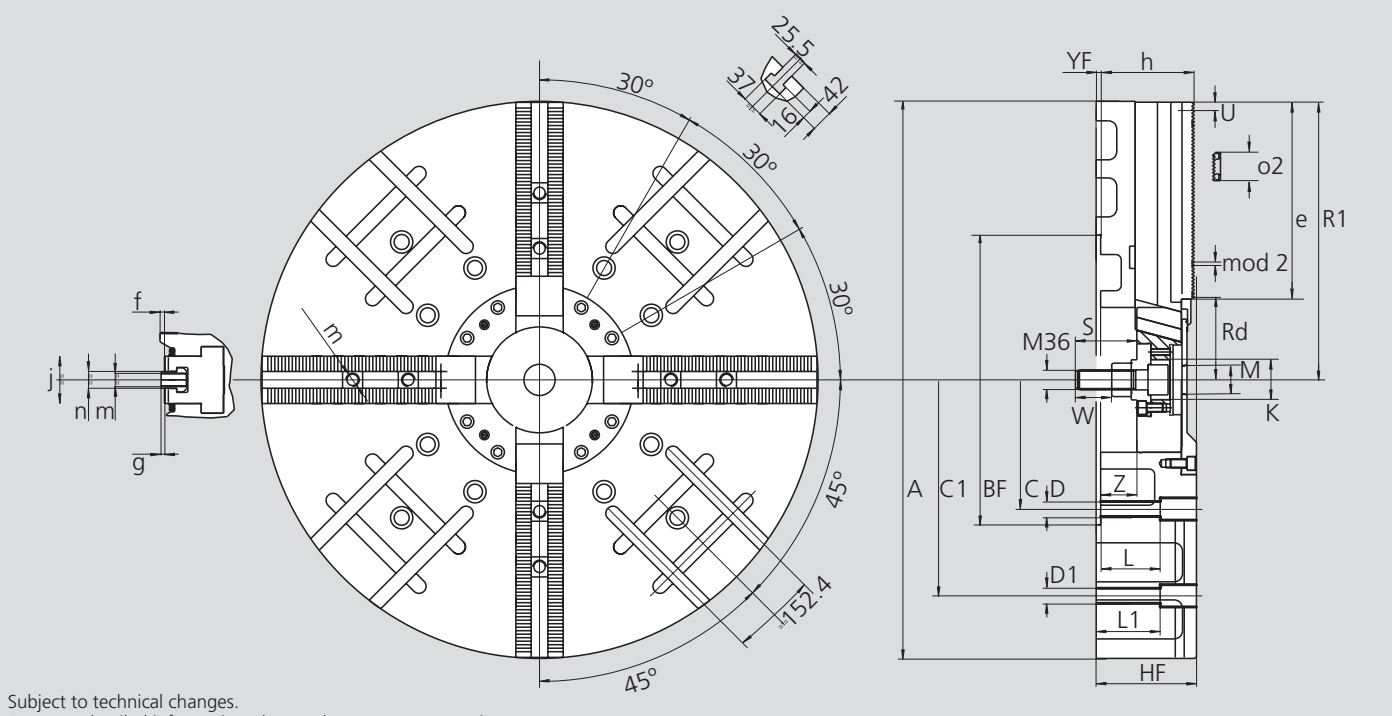

Subject to technical changes.
For more detailed information please ask our customer service.

SMW-AUTOBLOK Type			IN-D 1000		IN-D 1250		IL-D 1400	IL-D 1600
Mounting			Z520	A20	Z520	A20	Z720	Z720
	A	mm	1005		1250		1400	1600
	BF H6	mm	520		520		720	720
	C	mm	463.6		463.6		647.6	647.6
	C1	mm	700		700		1110	1110
	D	mm	27		27		33	33
	D1	mm	27		27		27	27
	HF	mm	200		200		240	240
	K	mm	72		72		72.5	72.5
	L	mm	137		137		177	177
	L1	mm	145		145		177	177
	M	mm	M52 x 1.5		M52 x 1.5		M52 x 1.5	M52 x 1.5
Chuck open	R1	mm	498		623		696	796
Chuck open	Rd	mm	148.5		148.5		179.5	179.5
Radial stroke	U	mm	15		15		24	24
	S	mm	118		118		118	118
	YF	mm	8		8		8	8
Max.	Z	mm	75		75		100	100
Min.	Z	mm	18		18		40	40
	e	mm	353		478		519	619
	f	mm	8		8		8	8
	g	mm	4		4		4	4
	h	mm	184		184		224	224
	j	mm	85		85		110	110
	m	mm	M24		M24		M24	M24
	n h8	mm	30		30		30	30
	o2 h6	mm	50.8		50.8		50.8	50.8

IR-C

TONGUE & GROOVE

High precision power chucks Ø 1000 - 2500 mm

- Radial setting of jaws
- Closed center
- 3 and 6 jaws (all diameters)

Application/customer benefits

- Chucking operations of very large components
- Suitable for vertical machines thanks to the front protection of the slide ways

IR-C: Manual radial setting of master jaws, TONGUE & GROOVE (type "American Standard") (all diameters)

Technical features

- Gripping force transmission via wedge hook
- Front protection of the slide ways against swarf and chips penetration
- IR-C chucks with manual radial setting of master jaws for the workpiece centering

Standard equipment

3- or 6-jaws chuck
1 set soft top jaws
Mounting bolts and grease gun

Ordering example

6-jaw chuck IR-C 1600/Z720

Actual gripping force diagrams

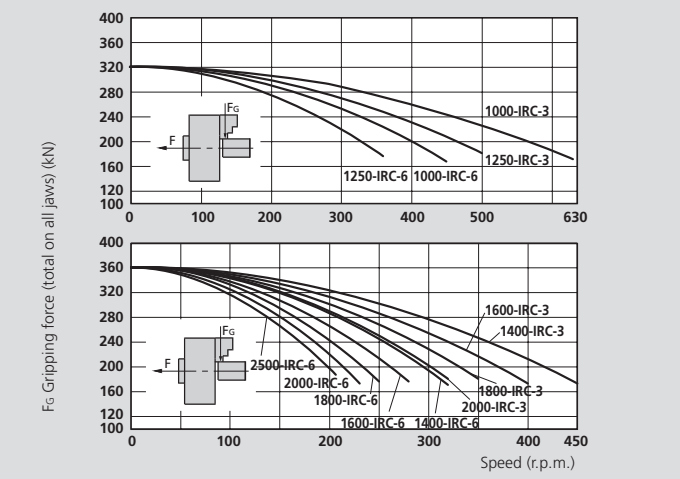

The data in the diagram refer to 3-6 jaw-chucks, newly maintained according to their service manuals using SMW-AUTOBLOK K05 grease. The static and dynamic gripping forces have been measured using standard soft top jaws, placed in a position not exceeding the outer diameter of the chuck.

Soft and hard top jaws for IR-C

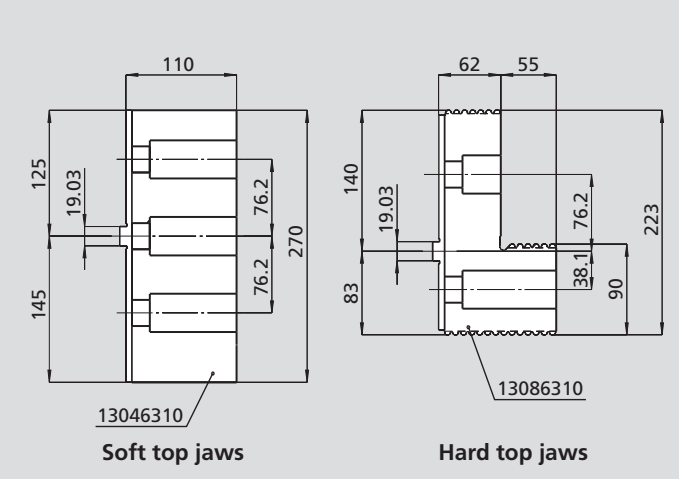

⚠ **Safety advice/danger of damage:**
When using taller/heavier jaws and/or clamping on a bigger diameter reduce draw pull/rotating speed accordingly.

Technical data

SMW-AUTOBLOK Type		IR-C 1000		IR-C 1250		IR-C 1400		IR-C 1600		IR-C 1800		IR-C 2000		IR-C 2500
Number of jaws		3	6	3	6	3	6	3	6	3	6	3	6	6
Radial jaw stroke + (manual setting)	mm	23 + (30)		23 + (30)		24 + (40)		24 + (40)		24 + (40)		24 + (40)		30 + (40)
Axial piston stroke	mm	57		57		60		60		60		60		60
Max. draw pull*	kN	180		180		200		200		200		200		270
Max. gripping force*	kN	320		320		360		360		360		360		380
Max. speed	r.p.m.	630	450	500	360	450	320	400	280	350	250	320	230	200
Weight (without top jaws)	kg	600		800		1200		1600		1800		2500		5100
Moment of inertia	kg·m²	68		145		280		500		750		1250		3860
Hard top jaw (piece)	Id. No.	13086310		13086310		13086310		13086310		13086310		13086310		13086310
Soft top jaw (piece)	Id. No.	13046310		13046310		13046310		13046310		13046310		13046310		13046310
Recommended actuating cylinders	**Type**	**SIN-S 250**		**SIN-S 250**		**SIN-S 250**		**SIN-S 250**		**SIN-S 250**		**SIN-S 250**		**SIN-S 250**

* For internal clamping reduce the draw pull by 30 %

SMW-AUTOBLOK
259

High precision power chucks Ø 1000 - 2500 mm

- Radial setting of jaws
- Closed center
- 3 and 6 jaws (all diameters)

IR-C

TONGUE & GROOVE

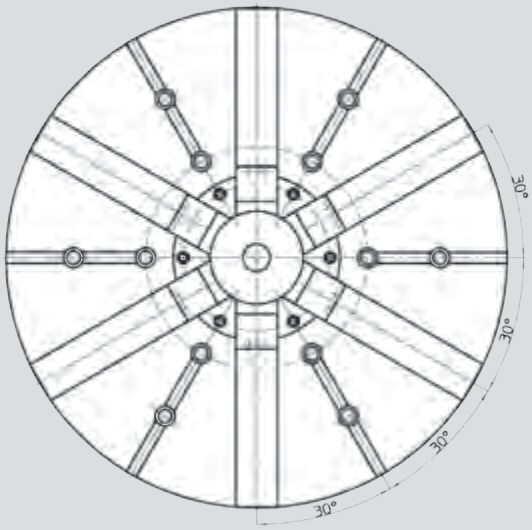

6 jaw version

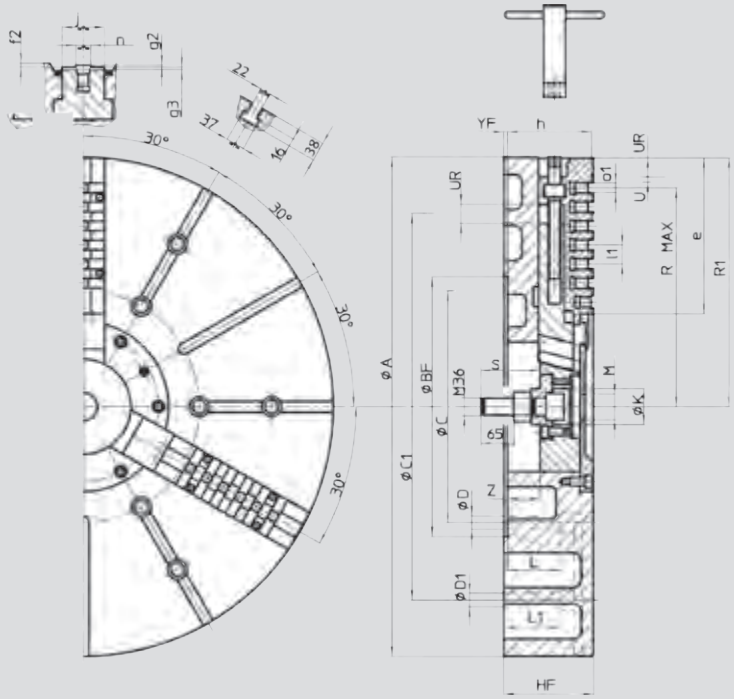

3 jaw version

Subject to technical changes.
For more detailed information please ask our customer service.

SMW-AUTOBLOK Type			IR-C 1000		IR-C 1250		IR-C 1400	IR-C 1600	IR-C 1800	IR-C 2000	IR-C 2500
Mounting			Z520	A20	Z520	A20	Z720	Z720	Z720	Z720	Z720
	A	mm	1005		1250		1400	1600	1800	2000	2500
	BF H6	mm	520		520		720	720	720	720	720
	C	mm	463.6		463.6		647.6	647.6	647.6	647.6	647.6
	C1	mm	700		700		1110	1110	1110	1110	1640
	D	mm	27		27		33	33	33	33	33
	D1	mm	27		27		27	27	27	27	27
	HF	mm	184		184		222	222	222	240	280
	K	mm	72		72		72	72	72	72	72
	L	mm	121		121		159	159	159	177	182
	L1	mm	97		97		130	130	130	148	205
	M	mm	M52 x 1.5		M52 x 1.5		M52 x 1.5	M52 x 1.5	M52 x 1.5	M52 x 1.5	-
Chuck open	R1	mm	502		623		696	796	896	996	1248
Chuck open	Rmax	mm	457		563		657	738	838	914	1176
	S	mm	100		100		100	100	100	100	30
Radial stroke	U	mm	23		23		24	24	24	24	40
Setting stroke	UR	mm	30		30		40	40	40	40	15
	YF	mm	8		8		8	8	8	8	8
Max.	Z	mm	59		59		82	82	82	100	-
Min.	Z	mm	2		2		22	22	22	40	-
	e	mm	295		416		446	546	639	739	959
	f2	mm	8		8		8	8	8	8	8
	g2	mm	4		4		4	4	4	4	4
	g3	mm	7		7		7	7	7	7	7
	h	mm	168		168		206	206	206	224	261
	j	mm	85		85		110	110	110	110	110
	l1	mm	38.1		38.1		38.1	38.1	38.1	38.1	38.1
	m	mm	M24		M24		M24	M24	M24	M24	M24
	n h8	mm	30		30		30	30	30	30	30
	o1 H7	mm	19.03		19.03		19.03	19.03	19.03	19.03	19.03
Number of „o1“ cross grooves			6		9		10	12	14	16	21
Number of „m“ threads			7		10		11	13	15	17	21

IR-C

TONGUE & GROOVE

High precision power chucks Ø 1000 - 2000 mm

- Radial setting of jaws
- Closed center
- 4 jaws (all diameters)

Application/customer benefits

- Clamping of large square and irregular parts using 2 or 4 jaws self centering
- Suitable for vertical machines thanks to the front protection of the slide ways
- Manual radial setting of master jaws
- TONGUE & GROOVE (type "American Standard")

Technical features

- Gripping force transmission via wedge hook
- Manual radial setting of master jaws for workpiece centering
- Protection from contamination with seals along the master jaw profiles
- Possibility to use jaw boxes for manual clamping mounted on the T-slots between the master jaws

Standard equipment

4-jaw chuck
1 set of soft top jaws
Mounting bolts
Grease gun

Ordering example

4-jaw chuck IR-C 1600/Z720

Actual gripping force diagrams

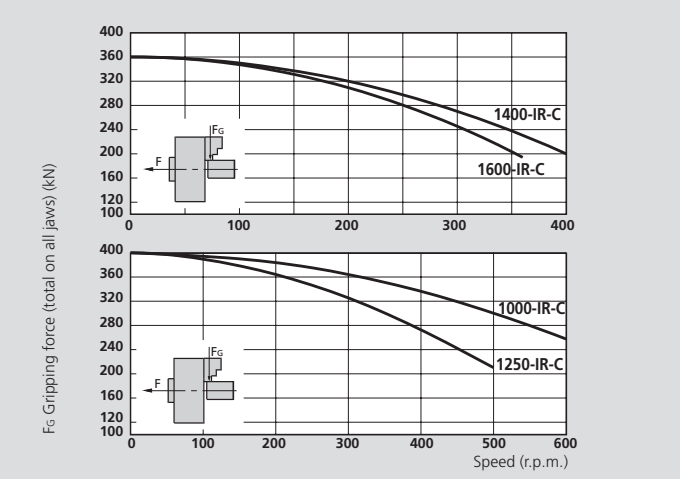

The data in the diagram refer to 4-jaw-chucks, newly maintained according to their service manuals using SMW-AUTOBLOK K05 grease. The static and dynamic gripping forces have been measured using standard soft top jaws, placed in a position not exceeding the outer diameter of the chuck.

Soft and hard top jaws for IR-C

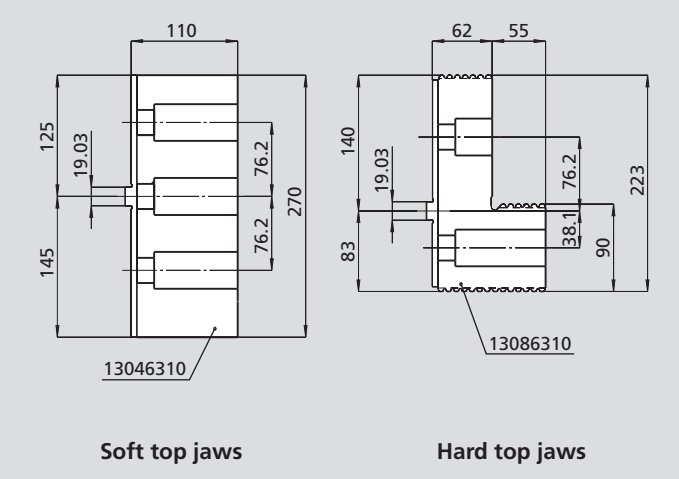

⚠ **Safety advice/danger of damage:**
When using taller/heavier jaws and/or clamping on a bigger diameter reduce draw pull/rotating speed accordingly.

Technical data

SMW-AUTOBLOK Type		IR-C 1000	IR-C 1250	IR-C 1400	IR-C 1600	IR-C 2000
Radial jaw stroke + (manual setting)	mm	23 + (30)	23 + (30)	24 + (40)	24 + (40)	24 + (40)
Axial piston stroke	mm	57	57	60	60	60
Max. draw pull*	kN	180	180	200	200	200
Max. gripping force*	kN	320	320	360	360	360
Max. speed	r.p.m.	550	450	380	340	280
Weight (without top jaws)	kg	660	900	1425	1765	2730
Moment of inertia	kg·m²	84	178	347	562	1360
Hard top jaw (piece)	Id. No.	13086310	13086310	13086310	13086310	13086310
Soft top jaw (piece)	Id. No.	13046310	13046310	13046310	13046310	13046310
Recommended actuating cylinders	**Type**	**SIN-S 250**	**SIN-S 250**	**SIN-S 250**	**SIN-S 250**	**SIN-S 250**

* For internal clamping reduce the draw pull by 30 %.

SMW-AUTOBLOK
259

High precision power chucks Ø 1000 - 2000 mm

- Radial setting of jaws
- Closed center
- 4 jaws (all diameters)

IR-C

TONGUE & GROOVE

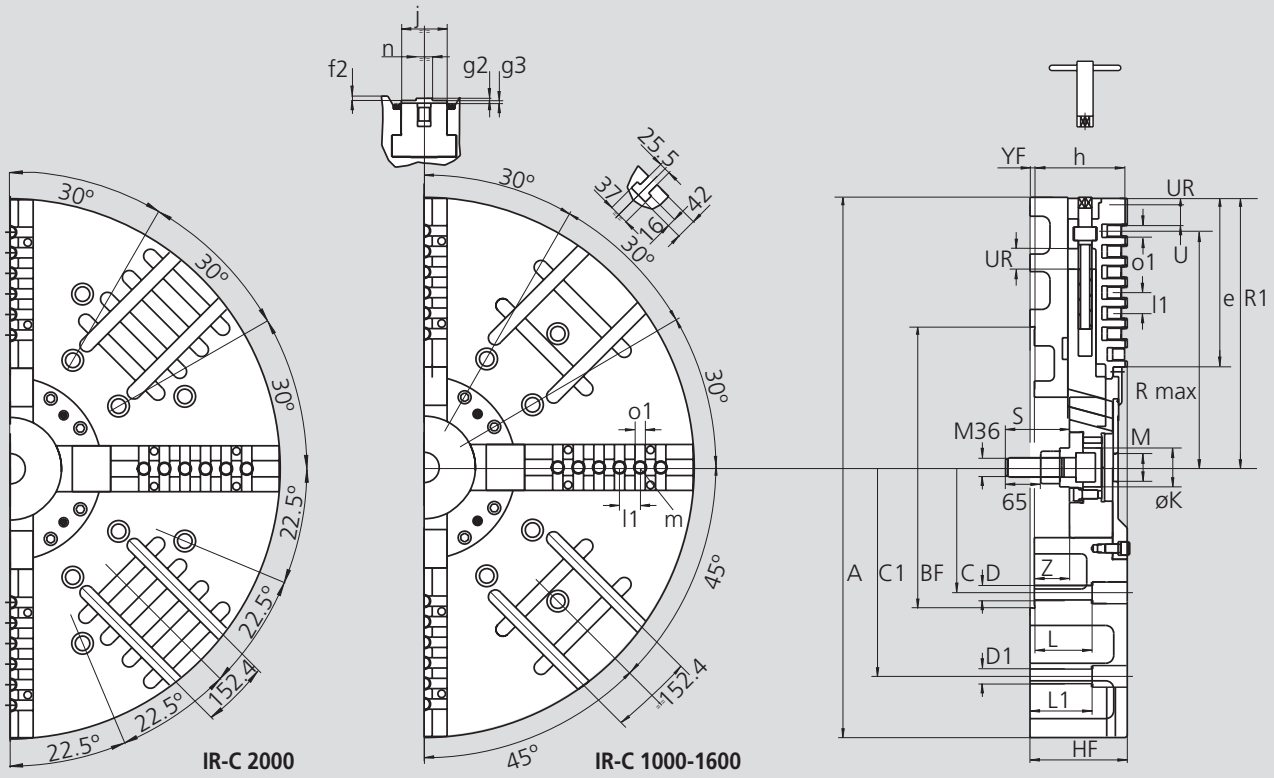

Subject to technical changes.
For more detailed information please ask our customer service.

SMW-AUTOBLOK Type			IR-C 1000		IR-C 1250		IR-C 1400	IR-C 1600	IR-C 2000
Mounting			Z520	A20	Z520	A20	Z720	Z720	Z720
	A	mm	1005		1250		1400	1600	2000
	B_F H6	mm	520		520		720	720	720
	C	mm	463.6		463.6		647.6	647.6	647.6
	C_1	mm	700		700		1110	1110	1110
	D	mm	27		27		33	33	33
	D_1	mm	27		27		27	27	27
	H_F	mm	200		200		240	240	260
	K	mm	72.5		72.5		72.5	72.5	72.5
	L	mm	137		137		177	177	197
	L_1	mm	145		145		177	177	205
	M	mm	M52 x 1.5		M52 x 1.5		M52 x 1.5	M52 x 1.5	M52 x 1.5
Chuck open	R_1	mm	502		623		696	796	996
Chuck open	R_{max}	mm	457		563		651	738	914
Radial stroke	U	mm	23		23		24	24	24
Setting stroke	U_R	mm	30		30		40	40	40
	S	mm	118		118		118	118	118
	Y_F	mm	8		8		8	8	8
Max.	Z	mm	75		75		100	100	120
Min.	Z	mm	18		18		40	40	40
	e	mm	295		416		446	539	739
	f_1	mm	-		-		-	-	-
	f_2	mm	8		8		8	8	8
	g_2	mm	4		4		4	4	4
	g_3	mm	7		7		7	7	7
	h	mm	184		184		224	224	244
	j	mm	85		85		110	110	110
	l_1	mm	38.1		38.1		38.1	38.1	38.1
	m	mm	M24		M24		M24	M24	M24
	n h8	mm	30		30		30	30	30
	o_1 H7	mm	19.03		19.03		19.03	19.03	19.03
Number of „o_1" cross grooves			6		9		10	12	16
Number of „m" threads			7		9		11	13	17

RAN

TONGUE & GROOVE

High precision pull-down chucks Ø 160 - 400 mm

- Pull-down effect of inclined master jaws
- Tongue & groove master jaws
- 3 jaws

Application/customer benefits

- 1st or 2nd operation of parts requesting close squareness and parallelism tolerances
- For chucking parts
- External clamping only

RAN: Inclined master jaws with pull-down effect and TONGUE & GROOVE

Technical features

- Chuck only available with tongue & groove master jaws
- Clamping on raw diameters with carbide inserts, increases the pull-down effect thanks to the penetration into the workpiece
- Central bore for coolant and/or air
- Chuck body and internal parts case hardened

Standard equipment

3-jaw chuck
Mounting bolts

Ordering example

3-jaw chuck RAN 200/A6
or
3-jaw chuck RAN 315/A8

Actual gripping force diagrams

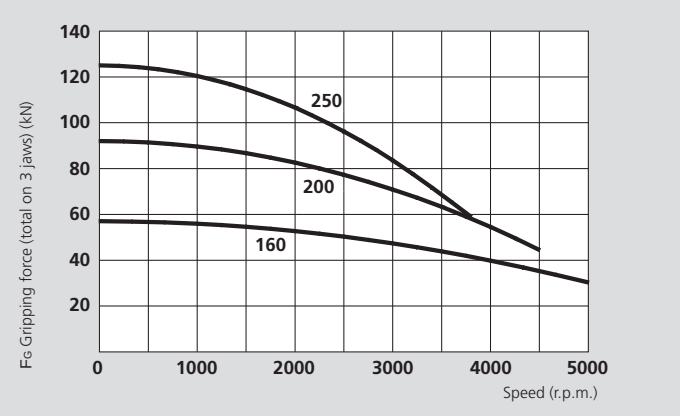

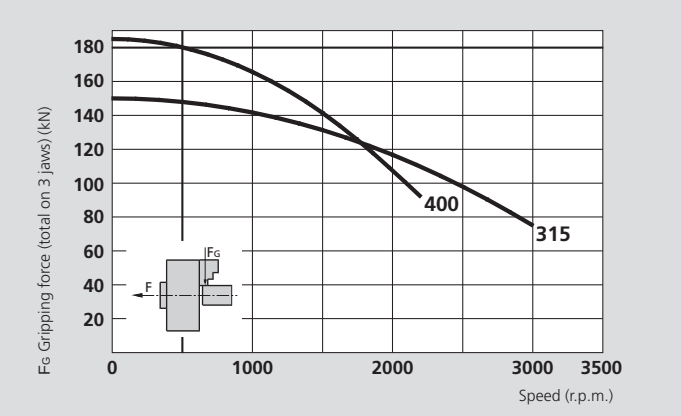

The data in the diagram refer to 3-jaw-chucks, newly maintained according to their service manuals using SMW-AUTOBLOK K05 grease. The static and dynamic gripping forces have been measured using standard soft top jaws, placed in a position not exceeding the outer diameter of the chuck.

⚠ **Safety advice/danger of damage:**
When using taller/heavier jaws and/or clamping on a bigger diameter reduce draw pull/rotating speed accordingly.

Technical data

SMW-AUTOBLOK Type		RAN 160	RAN 200	RAN 250	RAN 315	RAN 400
Number of jaws		**3**	**3**	**3**	**3**	**3**
Radial jaw stroke	mm	5	5	6	8	8
Axial jaw stroke (pull-down)	mm	1.25	1.25	1.5	2	2
Axial piston stroke	mm	20	20	25	32	32
Max. draw pull*	kN	25	40	55	65	80
Max. gripping force*	kN	57	92	125	150	185
Max. speed	r.p.m.	5000	4500	3800	3000	2200
Weight (without top jaws)	kg	10	17	31	54	95
Moment of inertia	kg·m²	0.034	0.10	0.26	0.65	1.85
Top jaw reference mass	kg	0.58	0.92	1.25	2.15	3.6
Recommended actuating cylinders	**Type**	**SIN-S 85/100**	**SIN-S 100/125**	**SIN-S 125/150**	**SIN-S 125/150**	**SIN-S 150/175**

* For internal clamping reduce the draw pull by 30 %.

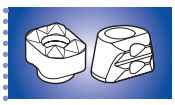
SMW-AUTOBLOK 400

SMW-AUTOBLOK 394

SMW-AUTOBLOK 259

High precision pull-down chucks Ø 160 - 400 mm

- Pull-down effect of inclined master jaws
- Tongue & groove master jaws
- 3 jaws

RAN

TONGUE & GROOVE

1

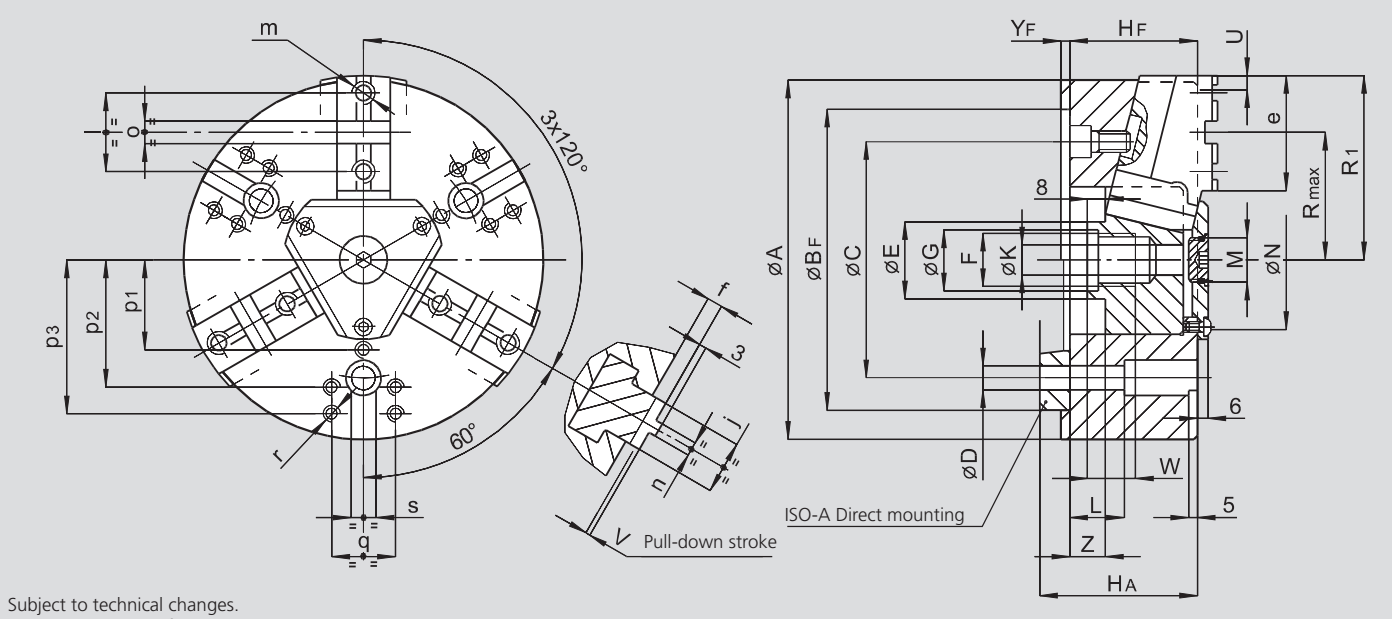

Subject to technical changes.
For more detailed information please ask our customer service.

SMW-AUTOBLOK Type			RAN 160		RAN 200		RAN 250		RAN 315		RAN 400	
Mounting			Z140	A5	Z170	A6	Z220	A8	Z220	A8	Z300	A11
	A	mm	165		203		250		305		390	
	BF H6	mm	140		170		220		220		300	
Fixing holes circle	**C**	mm	104.8		133.4		171.4		171.4		235	
Fixing holes diameter	**D**	mm	11.5		13.5		17		17		21	
	E	mm	32		41		47		47		66	
	F	mm	M24 x 2		M32 x 1.5		M38 x 1.5		M38 x 1.5		M56 x 2	
	G	mm	25		33		39		39		57	
	HF/HA	mm	66	81	72	89	87	106	95	114	104	125
Central through-hole	**K**	mm	16		18		25		25		36	
	L	mm	13		22		18		18		54	
	M	mm	M20 x 1		M24 x 1		M28 x 1.5		M28 x 1.5		M52 x 1.5	
	N	mm	75		90		105		112		145	
Chuck open	**R1**	mm	85		104		128		155		198	
	Rmax	mm	56		72		88		105		133	
Radial clamp. stroke	**U**	mm	5		5		6		8		8	
Pull-down clamp. stroke	**V**	mm	1.25		1.25		1.5		2		2	
	W	mm	20		25		25		25		35	
	YF	mm	5		5		5		5		6	
Axial wedge stroke	**Z**	mm	20		20		25		32		32	
	e	mm	57		65		84		103		130	
Chuck open	**f**	mm	8.25		8.25		8.5		9		11	
	j	mm	24		30		36		36		45	
	l	mm	38		44.4		54		63.5		76.2	
	m	mm	M10		M12		M16		M16		M20	
	n h8	mm	7.94		7.94		12.7		12.7		12.7	
	o H7	mm	12.68		12.68		19.03		19.03		19.03	
	p1	mm	-		-		60		65		85	
	p2	mm	65		72		100		90		120	
	p3	mm	-		87		-		120		150	
	q	mm	36		36		60		60		80	
	r	mm	M8		M8		M10		M10		M12	
	s	mm	16		14		16		20		20	

CL-C

TONGUE & GROOVE

CL-D

INCH SERRATION

High precision power chucks Ø 80 - 315 mm

- Long stroke
- Closed center
- 2 jaws

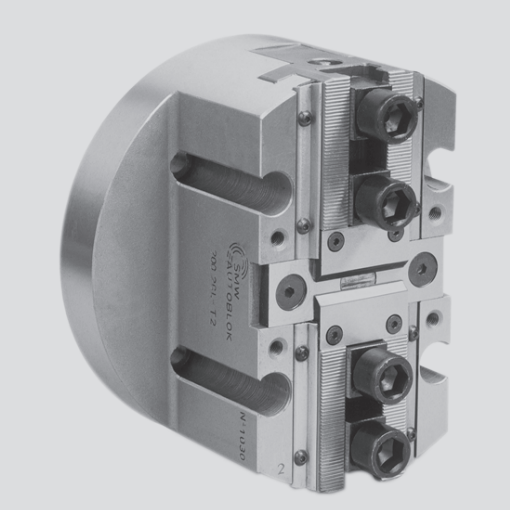

Application/customer benefits

- Gripping or handling of irregular shaped pieces, for example on special machines
- Suitable for vertical machines

CL-C: TONGUE & GROOVE master jaws DIN standard (Ø 80-160 mm)
CL-D: Master jaws with INCH SERRATION (1/16" x 90°) (Ø 200-315 mm)

Technical features

- Extra long stroke per jaw
- Gripping force transmission via wedge hook
- Sealed against swarf and chips

Standard equipment

2-jaw chuck
4 T-nuts with bolts (Ø 200-315 mm)
Without top jaws

Ordering example

2-jaw chuck CL-D 250/A8
or
2-jaw chuck CL-C 100/Z92

Actual gripping force diagrams

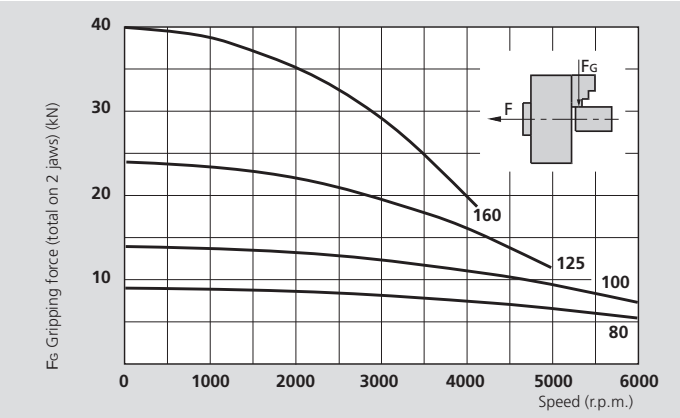

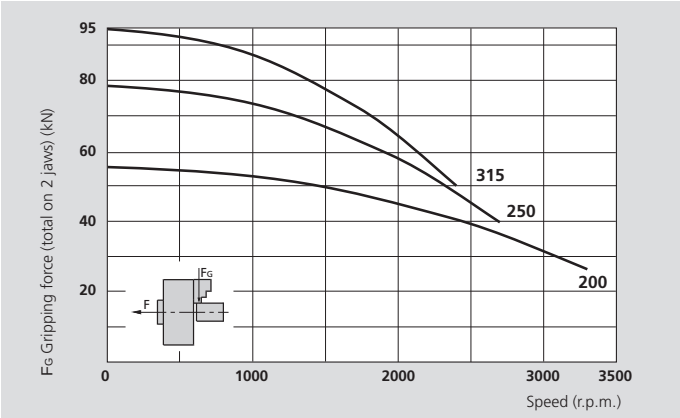

The data in the diagram refer to 2-jaw-chucks, newly maintained according to their service manuals using SMW-AUTOBLOK K05 grease. The static and dynamic gripping forces have been measured using standard soft top jaws, placed in a position not exceeding the outer diameter of the chuck.

⚠ **Safety advice/danger of damage:**
When using taller/heavier jaws and/or clamping on a bigger diameter reduce draw pull/rotating speed accordingly.

Technical data

SMW-AUTOBLOK Type		CL-C 80	CL-C 100	CL-C 125	CL-C 160	CL-D 200	CL-D 250	CL-D 315
Number of jaws		2	2	2	2	2	2	2
Radial jaw stroke	mm	4.4	5.5	8	10	12	13	14
Axial piston stroke	mm	11	14	20	25	30	32	35
Max. draw pull*	kN	6	9	15	25	35	50	60
Max. gripping force*	kN	9	14	24	40	55	78	95
Max. speed	r.p.m.	6000	6000	5000	4100	3300	2700	2400
Weight (without top jaws)	kg	1.5	2.5	5	10	14	24	38
Moment of inertia	kg·m²	0.0012	0.003	0.010	0.03	0.065	0.18	0.41

* For internal clamping reduce the draw pull by 30 %.

SMW-AUTOBLOK 394

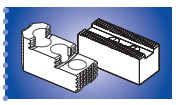

SMW-AUTOBLOK 396

SMW-AUTOBLOK 259

High precision power chucks Ø 80 - 315 mm

- Long stroke
- Closed center
- 2 jaws

CL-C
TONGUE & GROOVE

CL-D
INCH SERRATION

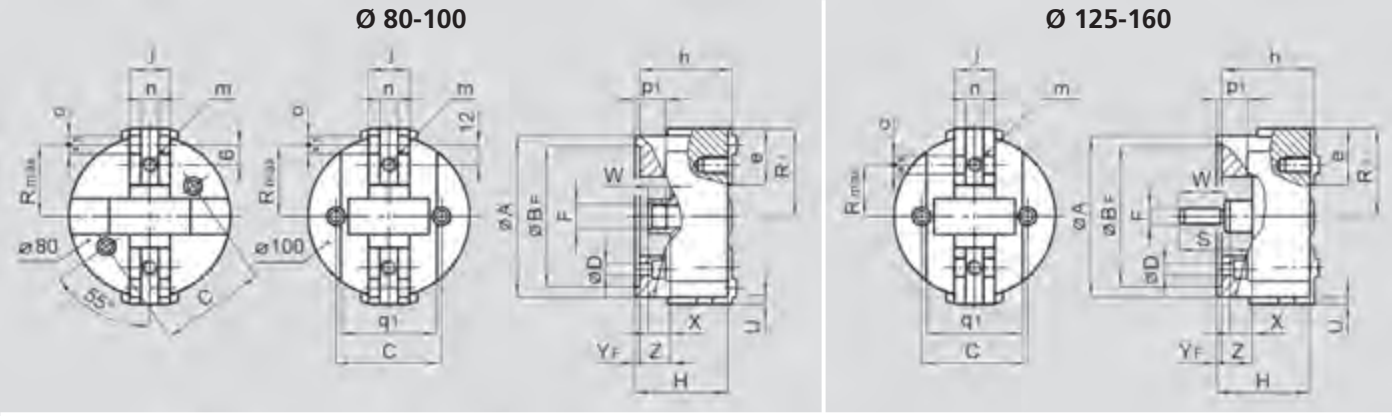

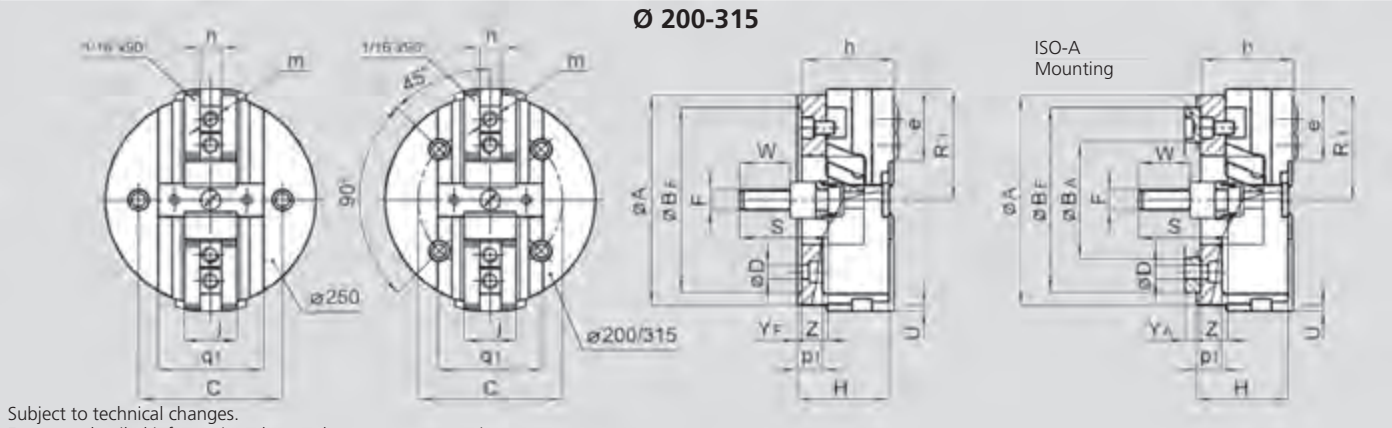

Subject to technical changes.
For more detailed information please ask our customer service.

SMW-AUTOBLOK Type			CL-C 80		CL-C 100		CL-C 125		CL-C 160		CL-D 200		CL-D 250		CL-D 315	
			TONGUE & GROOVE								INCH SERRATION					
Mounting			Z74	-	Z92	-	Z115	-	Z140	A5	Z170	A6	Z220	A8	Z220	A8
	A	mm	80		100		125		160		200		250		315	
	BF H6	mm	74	-	92	-	115	-	140		170		220		220	
	BA	mm	-	-	-	-	-	-	-	82.563	-	106.375	-	139.719	-	139.719
	C	mm	60		75		92		104.8		133.4		171.4		171.4	
	D	mm	9	-	11	-	13.5	-	12	12	13.5	13.5	17	17	17	17
	F	mm	M16 x 1.5		M18 x 1.5		M16		M16		M20		M24		M24	
	HF/HA	mm	45	-	54	-	76	-	92	102	103	115	109	123	114	128
Chuck open	R1	mm	40		50		68		87		108		132		165	
	Rmax	mm	32.4		43		38		51		-		-		-	
	S	mm	-		-		49		109		97		105		105	
Jaw stroke	U	mm	4.4		5.5		8		10		12		13		14	
	W	mm	12		16		40		52		55		60		60	
	X	mm	14		11		6		22		8		10		10	
	YF/YA	mm	4	-	4	-	4	-	5	15	5	17	5	19	5	19
Min./max.	Z	mm	11/0		14/0		26/6		30/5		30/0		32/0		37/2	
	e	mm	24.5		32		46		56		70		86		120	
	h	mm	45		54		76		91		104		110		115	
	j	mm	20		22		30		40		50		62		62	
	m	mm	M8		M10		M12		M16		M16		M20		M20	
	n h8	mm	8		8		14		18		21		25.5		25.5	
	o	mm	8		8		16		18		-		-		-	
	p1	mm	-		22		30		30		31		33		36	
	q1	mm	-		60		75		95		110		125		140	

Open center power chucks

Page 86

BH-D
INCH
SERRATION

High precision power chucks
Ø 130 - 450 mm

- Large through hole
- 2, 3 and 4 jaws

Page 88

BH-M
METRIC
SERRATION

High precision power chucks
Ø 130 - 450 mm

- Large through hole
- 2, 3 and 4 jaws

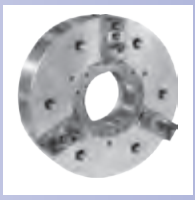

Page 90

BH-D Big diameters
INCH
SERRATION

High precision power chucks
Ø 500 - 800 mm

- Large through hole
- 3 jaws

Page 92

BHD-FC
INCH
SERRATION

BHM-FC
METRIC
SERRATION

High precision power chucks
Ø 165 - 630 mm

- Large through hole
- Centrifugal force compensation
- 3 jaws

Page 94

AG-2G-C
TONGUE & GROOVE

AG-2G-M
METRIC
SERRATION

High precision power chucks
Ø 225 mm

- Large through hole
- Centrifugal force compensation
- 3 jaws
- **proofline® chucks** = fully sealed – low maintenance

Page 96

BP-D
INCH
SERRATION

BP-M
METRIC
SERRATION

High precision power chucks
Ø 220 - 320 mm

- Large through hole
- 3 jaws
- **proofline® chucks** = fully sealed – low maintenance

Page 98

BP-C
TONGUE & GROOVE

High precision power chucks
Ø 220 - 320 mm

- Large through hole
- 3 jaws
- **proofline® chucks** = fully sealed – low maintenance

Page 100

BB-D
INCH
SERRATION

BB-M
METRIC
SERRATION

High precision power chucks
Ø 140 - 315 mm

- EXTRA large through hole
- 3 jaws

Page 102

HFKN-D/-M
INCH/ METRIC
SERRATION

HFKN-C
TONGUE & GROOVE

High precision power chucks
Ø 110 - 500 mm

- Wedge-bar design
- Large through hole
- 3 jaws

BH-D

INCH
SERRATION

High precision power chucks Ø 130 - 450 mm

- Large through hole
- 2, 3 and 4 jaws

Application/customer benefits

- For open center or partial open center clamping
- Large through-hole

BH-D: Master jaws with INCH SERRATION (1/16" x 90°) (400 and 450 3/32" x 90°)

Technical features

- Gripping force transmission via wedge hook
- Case hardened body to assure greatest precision and long chuck life
- 2 jaw version from diameter 130 to 315
- 3 jaw version available in all diameters
- 4 jaw chuck available starting from diameter 165 mm

Standard equipment

2-, 3- or 4-jaw chuck
1 set T-nuts with bolts
1 set soft top jaws
Mounting bolts

Ordering example

2-jaw chuck BH-D 210/A6
or
3-jaw chuck BH-D 250/A8

Actual gripping force diagrams

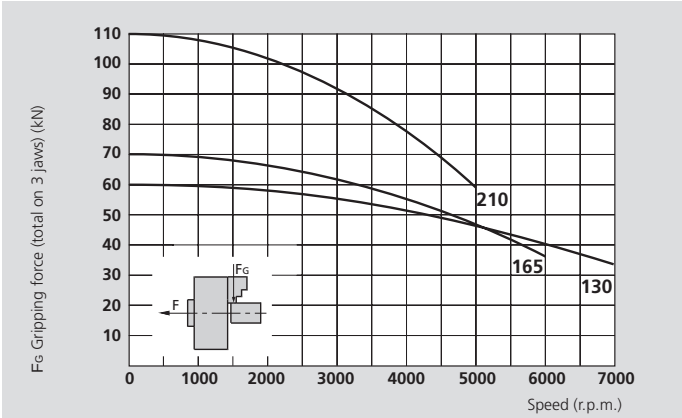

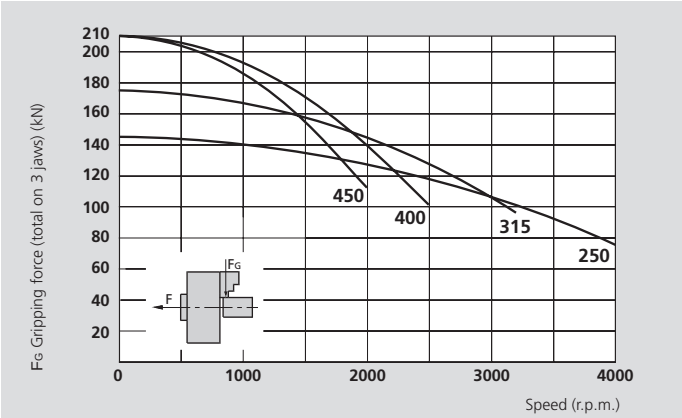

The data in the diagrams refer to 3-jaw-chucks, newly maintained according to their service manuals using SMW-AUTOBLOK K05 grease. The static and dynamic gripping forces have been measured using standard soft top jaws, placed in a position not exceeding the outer diameter of the chuck.

⚠ **Safety advice/danger of damage:**
When using taller/heavier jaws and/or clamping on a bigger diameter reduce draw pull/rotating speed accordingly.

Technical data

SMW-AUTOBLOK Type		BH-D 130		BH-D 165			BH-D 210			BH-D 250			BH-D 315			BH-D 400		BH-D 450	
Number of jaws		2	3	2	3	4	2	3	4	2	3	4	2	3	4	3	4	3	4
Through-hole	mm	32		46			52			66			95			118		118	
Radial jaw stroke	mm	3.2		3.2			4			5			5			6.5		6.5	
Axial piston stroke	mm	15		15			19			24			24			31		31	
Max. draw pull*	kN	15	22	17	25	25	25	38	38	34	50	50	40	60	60	70	70	70	70
Max. gripping force*	kN	42	60	48	70	70	72	110	110	98	145	145	115	175	175	210	210	210	210
Max. speed	r.p.m.	7000	7000	6000	6000	5000	5000	5000	4300	4000	4000	3400	3200	3200	2700	2500	2000	2000	1700
Weight (without top jaws)	kg	5		9.5			19			30			46			86		135	
Moment of inertia	kg·m²	0.012		0.036			0.12			0.27			0.62			2		3.5	
Recommended actuating cylinders		SIN-S 85/100		SIN-S 100			SIN-S 100/125			SIN-S 125/150			SIN-S 125/150			SIN-S 150/175			
		VNK-T2 70-37		VNK-T2 102-46			VNK-T2 130-52			VNK-T2 150-67			VNK-T2 225-95			VNK-T2 320-127			

* For internal clamping reduce the draw pull by 30 %.

SMW-AUTOBLOK 394

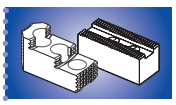

SMW-AUTOBLOK 396

SMW-AUTOBLOK 259

High precision power chucks Ø 130 - 450 mm

BH-D

- Large through hole
- 2, 3 and 4 jaws

INCH
SERRATION

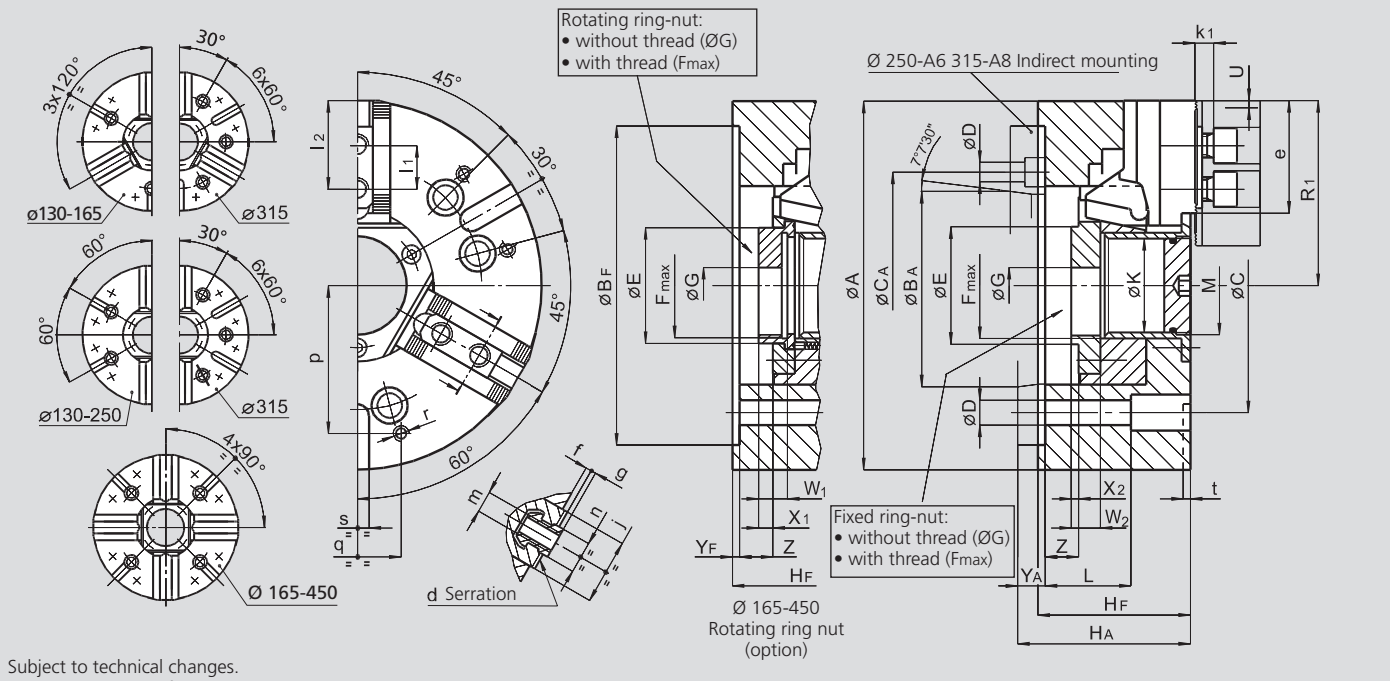

Subject to technical changes.
For more detailed information please ask our customer service.

SMW-AUTOBLOK Type			BH-D 130		BH-D 165		BH-D 210		BH-D 250			BH-D 315			BH-D 400		BH-D 450	
Mounting			Z115	A4	Z140	A5	Z170	A6	Z220	A6	A8	Z300	A8	A11	Z300	A11	Z300	A11
	A	mm	130		165		210		254			315			390		450	
	BF/BA H6	mm	115	63.513	140	82.563	170	106.375	220	106.375	139.719	300	139.719	196.869	300	196.869	300	196.869
	C	mm	82.6		104.8		133.4		171.4	-	171.4	235	-	235	235		235	
	CA	mm	-	-	-	-	-	-	-	133.4	-	-	171.4	-	-	-	-	-
	D	mm	11.5		11.5		13.5		17	13.5	17	17	17	21	21		21	
	E	mm	43.5		(*)		67		78			111			143		143	
	Fmax	mm	M38 x 1.5		(**)		M60 x 1.5		M72 x 1.5			M102 x 2			M130 x 2		M130 x 2	
	G	mm	12.5		20		20		25			25			70		70	
	HF/HA	mm	67	75	77	87	92	104	105	124	119	111	136	127	128	143	128	143
	K	mm	32		46		52		66			95			118		118	
	L	mm	51		61		66		59			33			101		101	
	M	mm	M35 x 1.5		M48 x 1.5		M54 x 1.5		M68 x 2			M98 x 2			M120 x 2		M120 x 2	
Chuck open	R1	mm	66.5		84.5		105.5		127.5			158			195		225	
Jaw stroke	U	mm	3.2		3.2		4		5			5			6.5		6.5	
	W1/W2	mm	-/14		18/16		20/18		20/20			23/23			33/35		33/35	
	X1/X2	mm	-/6		11/5		11/5		11/6			12/7			19/17		19/17	
	YF/YA	mm	5	13	5	15	5	17	5	24	19	5	30	21	6	21	6	21
Max./min.	Z	mm	15/0		15/0		19/0		24/0			24/0			31/0		31/0	
Serration	d	inch	1/16" x 90°		1/16" x 90°		1/16" x 90°		1/16" x 90°			1/16" x 90°			3/32" x 90° (1)		3/32" x 90°	
	e	mm	39		49.5		66		77.5			93			116.5		146.5	
	f	mm	2		3		3		4			4			5		5	
	g	mm	2.5		2.5		2.5		3.5			3.5			3.5		3.5	
	j	mm	30		33		38		45			45			62		62	
	k1	mm	10		10		11		12			12			14		14	
	l1	mm	16		16.5		23		30			30			34		34	
Max./min.	l2	mm	32/23		41/24		56/33		62/43			78/43			90/49		120/49	
	m	mm	M8		M10		M12		M16			M16			M20		M20	
	n h8	mm	12		14		17		21			21			25.5		25.5	
	p	mm	52		65		80		102			100			150		150	
	q	mm	30		36		45		60			60			80		80	
	r	mm	M6		M8		M8		M10			M10			M12		M12	
	s H12	mm	12		16		16		16			20			20		20	
	t	mm	5		5		5		5			5			5		5	

* E fixed ring nut Ø 60
E rotating ring nut Ø 56
** F_{max} fixed ring nut M55 x 2
F_{max} rotating ring nut M50 x 1.5
(1) Serration 1/16 x 90° on request

BH-M

METRIC
SERRATION

High precision power chucks Ø 130 - 450 mm

- Large through hole
- 2, 3 and 4 jaws

Application/customer benefits

- For open center or partial open center clamping
- Large through-hole

BH-M: Master jaws with METRIC SERRATION (1.5 mm x 60°)
(Suitable for Japanese chucks top jaws)

Technical features

- Gripping force transmission via wedge hook
- Case hardened body to assure greatest precision and long chuck life
- 2 jaw version from diameter 130 to 315
- 3 jaw version available in all diameters
- 4 jaw chuck available starting from diameter 165 mm

Standard equipment

2-, 3- or 4-jaw chuck
1 set T-nuts with bolts
1 set soft top jaws
Mounting bolts

Ordering example

2-jaw chuck BH-M 210/A6
or
3-jaw chuck BH-M 250/A8

Actual gripping force diagrams

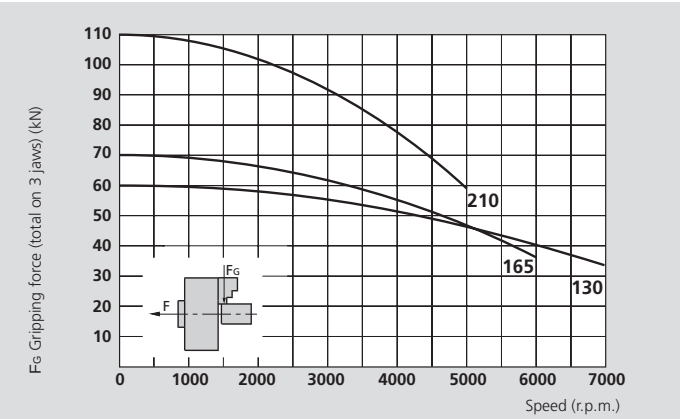

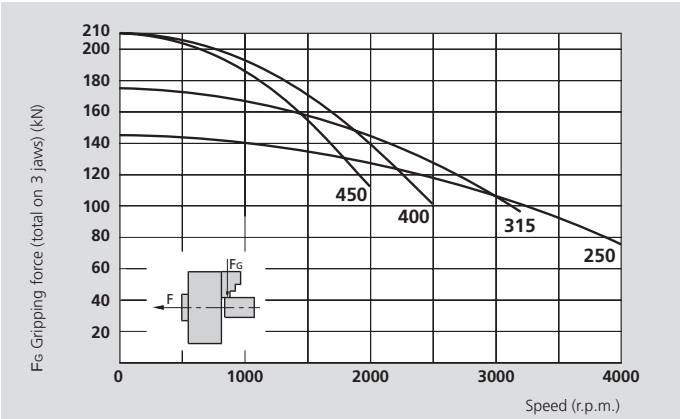

The data in the diagrams refer to 3-jaw-chucks, newly maintained according to their service manuals using SMW-AUTOBLOK K05 grease. The static and dynamic gripping forces have been measured using standard soft top jaws, placed in a position not exceeding the outer diameter of the chuck.

⚠ **Safety advice/danger of damage:**
When using taller/heavier jaws and/or clamping on a bigger diameter reduce draw pull/rotating speed accordingly.

Technical data

SMW-AUTOBLOK Type		BH-M 130		BH-M 165			BH-M 210			BH-M 250			BH-M 315			BH-M 400		BH-M 450	
Number of jaws		2	3	2	3	4	2	3	4	2	3	4	2	3	4	3	4	3	4
Through-hole	mm	32		46			52			66			95			118		118	
Radial jaw stroke	mm	3.2		3.2			4			5			5			6.5		6.5	
Axial piston stroke	mm	15		15			19			24			24			31		31	
Max. draw pull*	kN	15	22	17	25	25	25	38	38	34	50	50	40	60	60	70	70	70	70
Max. gripping force*	kN	42	60	48	70	70	72	110	110	98	145	145	115	175	175	210	210	210	210
Max. speed	r.p.m.	7000	7000	6000	6000	5000	5000	5000	4300	4000	4000	3400	3200	3200	2700	2500	2000	2000	1700
Weight (without top jaws)	kg	5		9.5			19			30			46			86		135	
Moment of inertia	kg·m²	0.012		0.036			0.12			0.27			0.62			2		3.5	
Recommended actuating cylinders		SIN-S 85/100		SIN-S 100			SIN-S 100/125			SIN-S 125/150			SIN-S 125/150			SIN-S 150/175			
		VNK-T2 70-37		VNK-T2 102-46			VNK-T2 130-52			VNK-T2 150-67			VNK-T2 225-95			VNK-T2 320-127			

* For internal clamping reduce the draw pull by 30 %.

SMW-AUTOBLOK 394

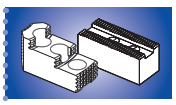
SMW-AUTOBLOK 396

SMW-AUTOBLOK 259

High precision power chucks Ø 130 - 450 mm

BH-M

- Large through hole
- 2, 3 and 4 jaws

METRIC SERRATION

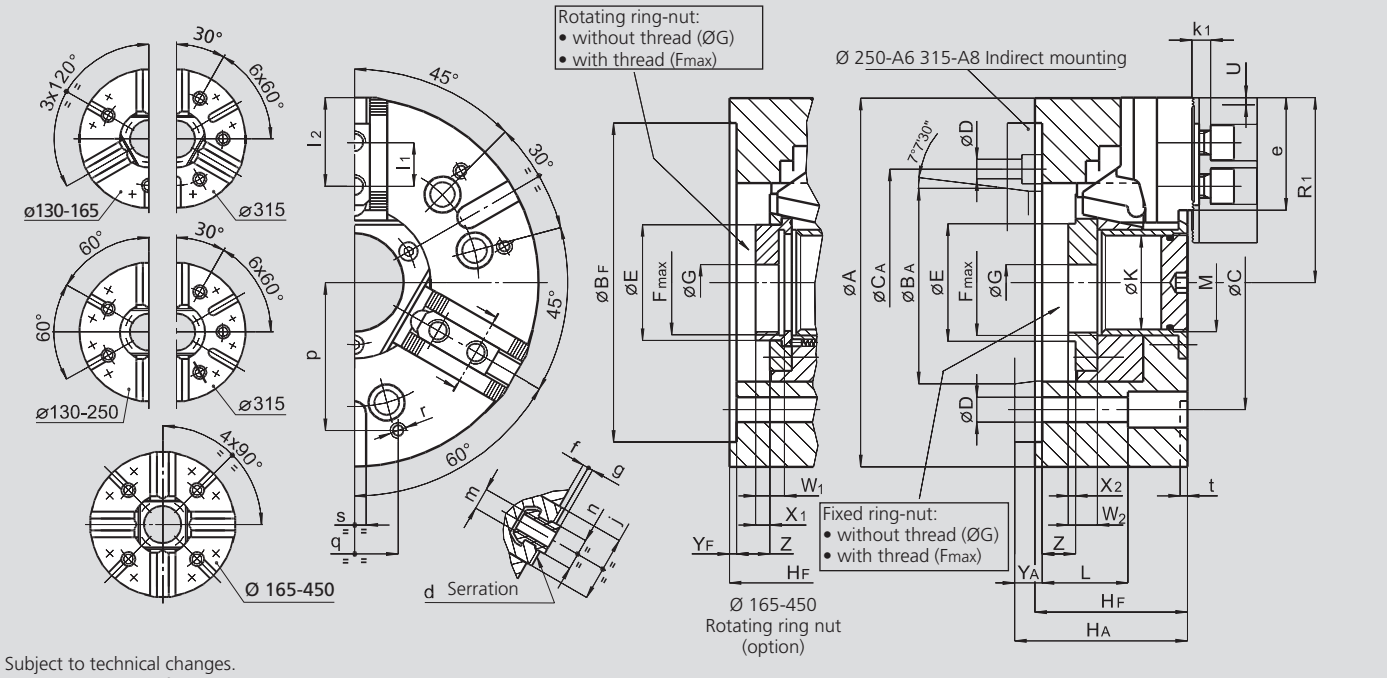

Subject to technical changes.
For more detailed information please ask our customer service.

SMW-AUTOBLOK Type			BH-M 130		BH-M 165		BH-M 210		BH-M 250			BH-M 315			BH-M 400		BH-M 450	
Mounting			Z115	A4	Z140	A5	Z170	A6	Z220	A6	A8	Z300	A8	A11	Z300	A11	Z300	A11
	A	mm	130		165		210		254			315			390		450	
	BF/BA H6	mm	115	63.513	140	82.563	170	106.375	220	106.375	139.719	300	139.719	196.869	300	196.869	300	196.869
	C	mm	82.6		104.8		133.4		171.4	-	171.4	235	-	235	235		235	
	CA	mm	-	-	-	-	-	-	-	133.4	-	-	171.4	-	-	-	-	-
	D	mm	11.5		11.5		13.5		17	13.5	17	17	17	21	21		21	
	E	mm	43.5		(*)		67		81			111			143		143	
	Fmax	mm	M38 x 1.5		(**)		M60 x 2		M75 x 2			M100 x 2			M130 x 2		M130 x 2	
	G	mm	12.5		20		20		25			25			70		70	
	HF/HA	mm	67	75	77	87	92	104	105	124	119	111	136	127	128	143	128	143
	K	mm	32		46		52		66			95			118		118	
	L	mm	51		61		66		59			33			101		101	
	M	mm	M35 x 1.5		M48 x 1.5		M54 x 1.5		M68 x 2			M98 x 2			M120 x 2		M120 x 2	
Chuck open	R1	mm	66.5		84.5		105.5		127.5			158			195		225	
Jaw stroke	U	mm	3.2		3.2		4		5			5			6.5		6.5	
	W1/W2	mm	-/14		18/16		20/18		33/38			33/40			33/35		33/35	
	X1/X2	mm	-/6		11/5		11/5		24/24			24/24			19/17		19/17	
	YF/YA	mm	5	13	5	15	5	17	5	24	19	5	30	21	6	21	6	21
Max./min.	Z	mm	15/0		15/0		19/0		24/0			24/0			31/0		31/0	
Serration	d	mm	1.5 x 60°		1.5 x 60°		1.5 x 60°		1.5 x 60°			1.5 x 60°			1.5 x 60°		1.5 x 60°	
	e	mm	39		49.5		66		77.5			93			116.5		146.5	
	f	mm	2		3		3		4			4			5		5	
	g	mm	2.5		2.5		2.5		3.5			3.5			3.5		3.5	
	j	mm	30		33		38		45			45			62		62	
	k1	mm	10		10		11		12			12			14		14	
	l1	mm	16		20		25		30			30			34		34	
Max./min.	l2	mm	32/23		41/24		56/33		62/43			78/43			90/49		120/49	
	m	mm	M8		M10		M12		M12			M16			M20		M20	
	n h8	mm	12		12		14		16			21			22		22	
	p	mm	52		65		80		102			100			150		150	
	q	mm	30		36		45		60			60			80		80	
	r	mm	M6		M8		M8		M10			M10			M12		M12	
	s H12	mm	12		16		16		16			20			20		20	
	t	mm	5		5		5		5			5			5		5	

* E fixed ring nut Ø 60
E rotating ring nut Ø 56

** F_{max} fixed ring nut M55 x 2
F_{max} rotating ring nut M50 x 1.5

BH-D
Big diameters
INCH
SERRATION

High precision power chucks Ø 500 - 800 mm

■ Large through hole
■ 3 jaws

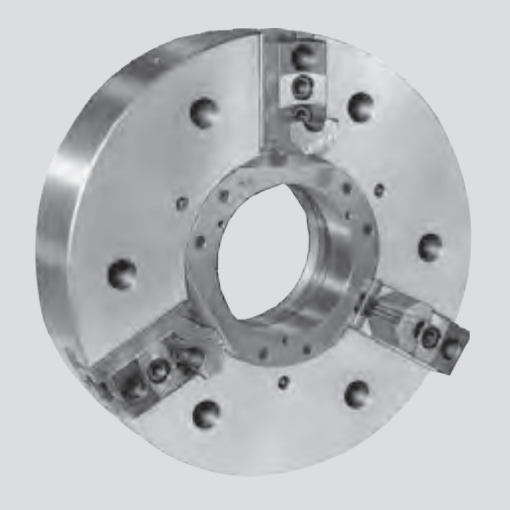

Application/customer benefits
- For open center or partial open center clamping
- Large through-hole

BH-D: Master jaws with INCH SERRATION 3/32"x 90°

Technical features
- Gripping force transmission via wedge hook

Standard equipment
3-jaw chuck
1 set T-nuts with bolts
1 set soft top jaws
Blank ring-nut
Mounting bolts

Ordering example
3-jaw chuck BH-D 500/A15
or
3-jaw chuck BH-D 800/Z520

Actual gripping force diagram

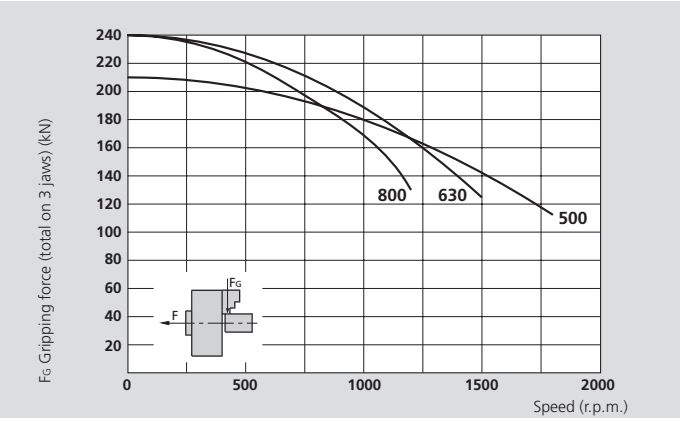

The data in the diagrams refer to 3-jaw-chucks, newly maintained according to their service manuals using SMW-AUTOBLOK K05 grease. The static and dynamic gripping forces have been measured using standard soft top jaws, placed in a position not exceeding the outer diameter of the chuck.

⚠ **Safety advice/danger of damage:**
When using taller/heavier jaws and/or clamping on a bigger diameter reduce draw pull/rotating speed accordingly.

Technical data

SMW-AUTOBLOK Type		BH-D 500	BH-D 630	BH-D 800
Number of jaws		**3**	**3**	**3**
Through-hole	mm	180	230	230
Radial jaw stroke	mm	6.5	9	9
Axial piston stroke	mm	31	34	34
Max. draw pull*	kN	70	100	100
Max. gripping force*	kN	210	240	240
Max. speed	r.p.m.	1800	1500	1200
Weight (without top jaws)	kg	140	280	530
Moment of inertia	kg·m²	5	16	47
Recommended actuating cylinders		**SIN-S 150/200**	**SIN-S 150/200**	**SIN-S 150/200**
		VSG 450-165	**VSG 550-205**	**VSG 550-205**

* For internal clamping reduce the draw pull by 30 %.

SMW-AUTOBLOK 394

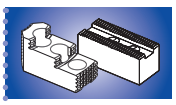
SMW-AUTOBLOK 396

SMW-AUTOBLOK 259

High precision power chucks Ø 500 - 800 mm

- Large through hole
- 3 jaws

BH-D

Big diameters

INCH
SERRATION

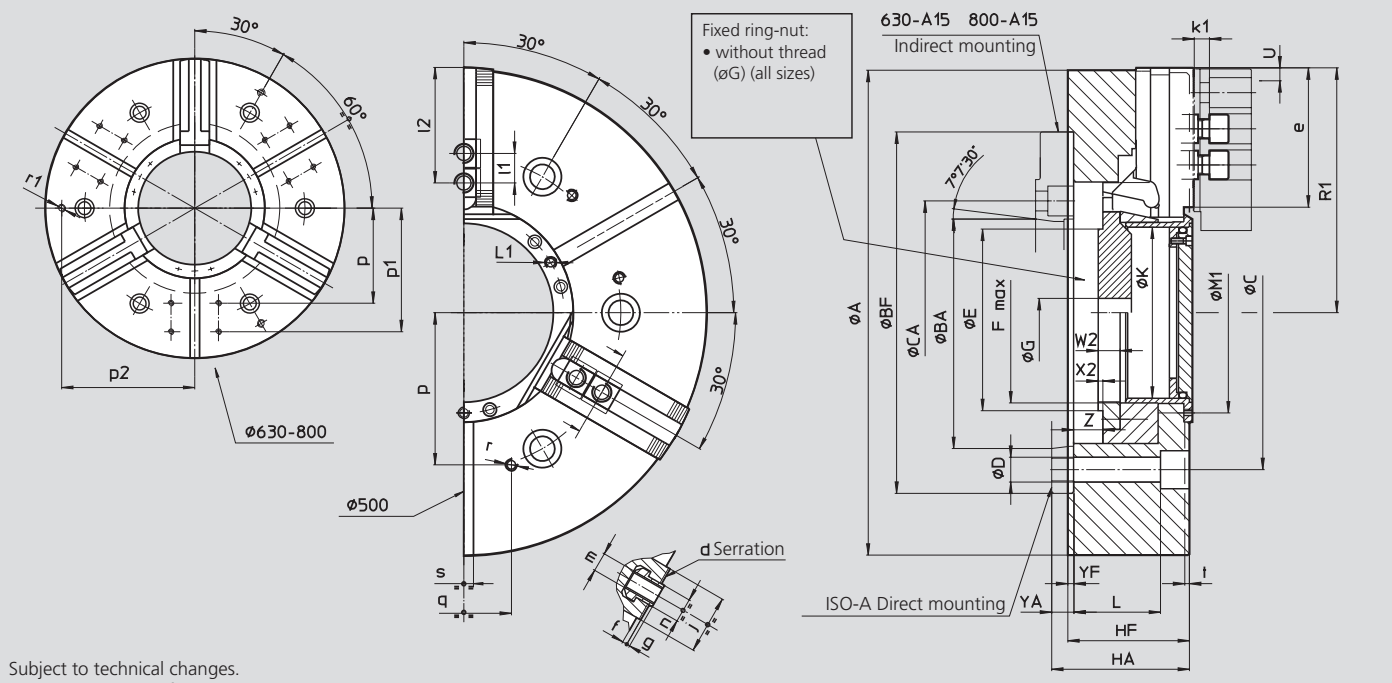

Subject to technical changes.
For more detailed information please ask our customer service.

SMW-AUTOBLOK Type			BH-D 500		BH-D 630			BH-D 800		
Mounting			Z380	A15	Z520	A15	A20	Z520	A15	A20
	A	mm	510			630			800	
	BF/BA H6	mm	380	285.775	520	285.775	412.775	520	285.775	412.775
	C	mm	330.2		463.6	-	463.6	463.6	-	463.6
	CA	mm	-	-	-	330.2	-	-	330.2	-
	D	mm	26			26			26	
	E	mm	206			260			260	
	Fmax	mm	M190 x 3 (*)			M250 x 3 (*)			M250 x 3 (*)	
	G	mm	30			30			30	
	HF/HA	mm	128	145	150	184	169	150	184	169
	K	mm	180			230			230	
	L	mm	91			99			99	
	L1	mm	M8/9			M8/16			M8/16	
	M1	mm	211			270			270	
Chuck open	R1	mm	257.5			314			399	
Jaw stroke	U	mm	6.5			9			9	
	W2	mm	23			23			23	
	X2	mm	5			5			5	
	YF/YA	mm	6	23	6	40	25	6	40	25
Max./min.	Z	mm	31/0			34/0			34/0	
BH-D serration	d	inch	3/32" x 90°			3/32" x 90°			3/32" x 90°	
	e	mm	146.5			152			237	
	f	mm	5			10			10	
	g	mm	3.5			3.5			3.5	
	j	mm	62			62			62	
	k1	mm	16			16			16	
	l1	mm	38			38			38	
Max./min.	l2	mm	121/53			127/53			212/53	
	m	mm	M20			M20			M20	
	n h8	mm	25.5			25.5			25.5	
	p	mm	160			200			200	
	p1	mm	-			260			260	
	p2	mm	-			280			280	
	q	mm	100			100			100	
	r	mm	M12/22			M12/22			M12/22	
	r1	mm	-			M16/28			M16/28	
	s H12	mm	20			20			20	
	t	mm	5			5			5	

* Max. possible thread on blank ring-nut.

BHD-FC

INCH SERRATION

BHM-FC

METRIC SERRATION

High precision power chucks Ø 165 - 630 mm

- Centrifugal force compensation
- Large through hole
- 3 jaws

Application/customer benefits

- For open center or partial open center clamping
- Large through-hole
- Compensation of centrifugal force for high speed
- Clamping of easily deformed parts with low gripping force, maintained to high speed

BHD-FC: Master jaws with INCH SERRATION (1/16" x 90°, 3/32" x 90°)
BHM-FC: Master jaws with METRIC SERRATION (1.5 mm x 60°) (Ø 165-400 mm) (suitable for japanese jaws)

Technical features

- Gripping force transmission via wedge hook
- Centrifugal force compensation by means of counter balance weights for minimum loss of gripping force at high speed
- Case hardened body (up to Ø 315) to assure greatest precision and long chuck life

Standard equipment

3-jaws chuck
1 set T-nuts with bolts
1 set soft top jaws
Mounting bolts

Ordering example

3-jaw chuck BHD-FC 210/A6
or
3-jaw chuck BHM-FC 250/Z220

Actual gripping force diagrams

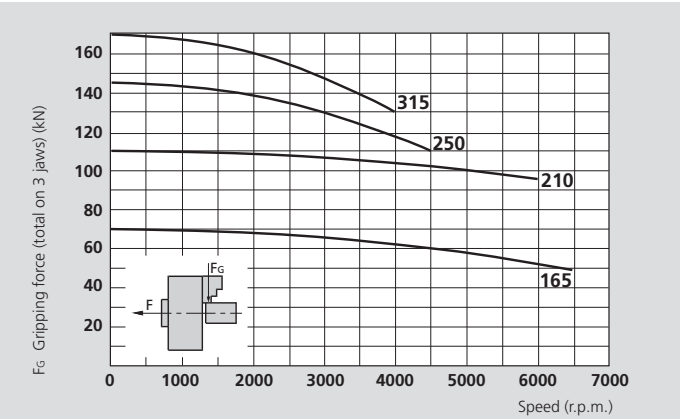

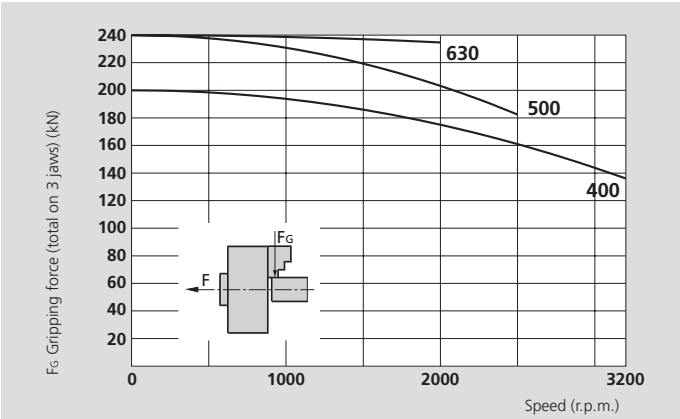

The data in the diagrams refer to 3-jaw-chucks, newly maintained according to their service manuals using SMW-AUTOBLOK K05 grease. The static and dynamic gripping forces have been measured using standard soft top jaws, placed in a position not exceeding the outer diameter of the chuck.

⚠ **Safety advice/danger of damage:**
When using taller/heavier jaws and/or clamping on a bigger diameter reduce draw pull/rotating speed accordingly.

Technical data

SMW-AUTOBLOK Type		BHD-FC 165 BHM-FC 165	BHD-FC 210 BHM-FC 210	BHD-FC 250 BHM-FC 250	BHD-FC 315 BHM-FC 315	BHD-FC 400 BHM-FC 400	BHD-FC 500 -	BHD-FC 630 -
Number of jaws		3	3	3	3	3	3	3
Through-hole	mm	45	52	66	95	118	125	165
Radial jaw stroke	mm	3.2	4	5	5	6.5	9	9
Axial piston stroke	mm	15	19	24	24	31	34	34
Max. draw pull*	kN	25	38	50	60	70	100	100
Max. gripping force*	kN	70	110	145	170	200	240	240
Max. speed	r.p.m.	6500	6000	4500	4000	3200	2500	2000
Weight (without top jaws)	kg	11	21	32	50	95	160	335
Moment of inertia	kg·m²	0.042	0.13	0.29	0.67	2	5.2	18
Recommended actuating cylinders	**SIN-S**	**100**	**100/125**	**125/150**	**125/150**	**150/175**	**150/175/200**	**175/200**
	VNK-T2/VSG	**102-46**	**130-52**	**150-67**	**225-95**	**320-127**	**320-127**	**450/165**

* For internal clamping reduce the draw pull by 30 %.

SMW-AUTOBLOK 394

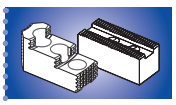
SMW-AUTOBLOK 396

SMW-AUTOBLOK 259

High precision power chucks Ø 165 - 630 mm

- Centrifugal force compensation
- Large through hole
- 3 jaws

BHD-FC
INCH SERRATION

BHM-FC
METRIC SERRATION

2

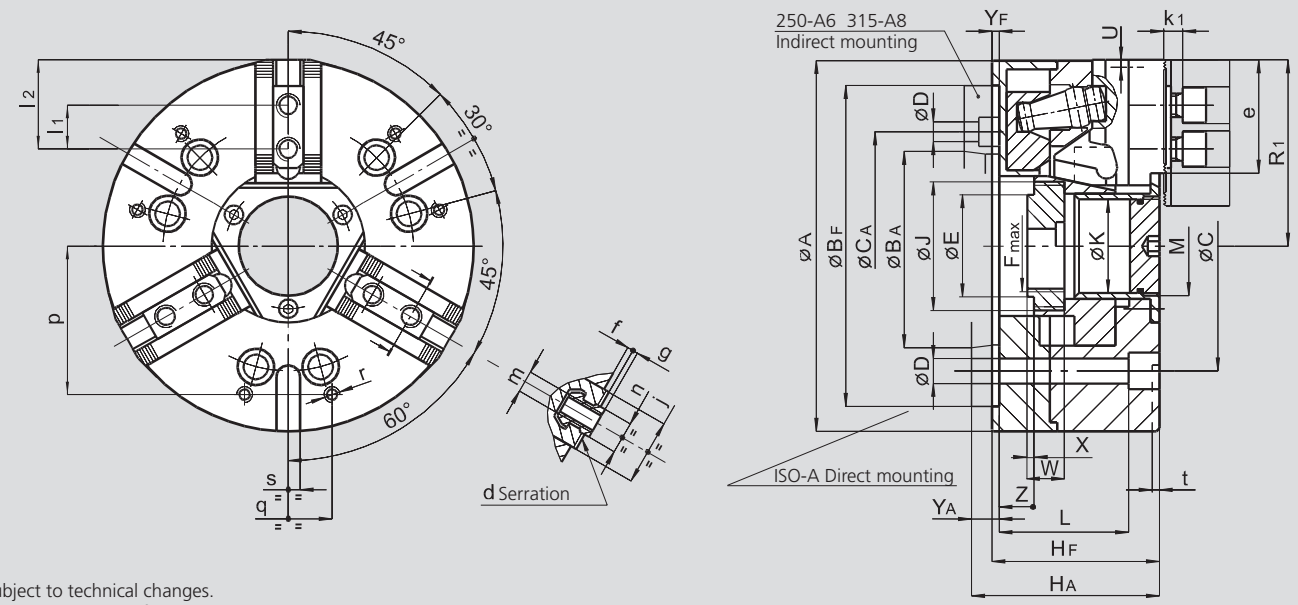

Subject to technical changes.
For more detailed information please ask our customer service.

SMW-AUTOBLOK Type			BHD-FC 165 BHM-FC 165		BHD-FC 210 BHM-FC 210		BHD-FC 250 BHM-FC 250			BHD-FC 315 BHM-FC 315			BHD-FC 400 BHM-FC 400		BHD-FC 500 -		BHD-FC 630 -	
Mounting			Z140	A5	Z170	A6	Z220	A6	A8	Z300	A8	A11	Z300	A11	Z380	A15	Z380	A15
	A	mm	168		210		250			315			390		510		630	
	BF/BA H6	mm	140	82.563	170	106.375	220	106.375	139.719	300	139.719	196.869	300	196.869	380	285.775	380	285.775
	C	mm	104.8		133.4		171.4	-	171.4	235	-	235	235		330.2		330.2	
	CA	mm	-	-	-	-	-	133.4	-	-	171.4	-	-		-		-	
	D	mm	11.5		13.5		17	13.5	17	21	17	21	21		25		25	
	E	mm	58		67		78			111			140		148		198	
	F/Fmax	mm	M52 x 1.5		M60 x 1.5		M72 x 1.5			M105 x 2			M130 x 2		M135 x 2		M175 x 2	
	J	mm	M60 x 1.5		M72 x 1.5		M88 x 1.5			M120 x 2			M145 x 2		M160 x 2		M195 x 2	
	HF/HA	mm	90	100	100	112	115	134	129	120	145	136	143	158	160	177	160	177
	K	mm	45		52		66			95			118		125		165	
	L	mm	72		74		89			72			115		129		129	
	M	mm	M47 x 1.5		M54 x 1.5		M68 x 2			M98 x 2			M120 x 2		-		-	
Chuck open	R1	mm	84		105.5		127.5			158			195		255		315	
Jaw stroke	U	mm	3.2		4		5			5			6.5		9		9	
	W	mm	23		24		26			28			46		25		30	
	X	mm	5		4		6			6			17		3		5	
	YF/YA	mm	5	15	5	17	5	24	19	5	30	21	6	21	6	23	6	23
Max./min.	Z	mm	15/0		19/0		24/0			24/0			31/0		37/3		37/3	
BHD-FC ser.	d	inch	1/16" x 90°		1/16" x 90°		1/16" x 90°			1/16" x 90°			3/32" x 90°		3/32" x 90°		3/32" x 90°	
BHM-FC ser.	d	mm	1.5 x 60°		1.5 x 60°		1.5 x 60°			1.5 x 60 °			1.5 x 60 °		-		-	
	e	mm	49.5		66		77.5			93			116.5		152		192	
	f	mm	5		4		4			4			5		10		10	
	g	mm	2.5		2.5		3.5			3.5			3.5		3.5		3.5	
	j	mm	30		36		45			45			62		62		62	
	k1	mm	10		11		12			12			14		16		16	
BHD-FC	l1	mm	16.5		23		30			30			34		38		38	
BHM-FC	l1	mm	20		25		30			30			34		-		-	
Max./min.	l2	mm	41/23		56/33		62/43			78/43			90/49		129/53		167/53	
BHD-FC	m	mm	M10		M12		M16			M16			M20		M20		M20	
BHM-FC	m	mm	M10		M12		M12			M16			M20		-		-	
BHD-FC	n h8	mm	14		17		21			21			25.5		25.5		25.5	
BHM-FC	n h8	mm	12		14		16			21			22		-		-	
	p	mm	65		80		102			125			150		160		200	
	q	mm	36		45		60			100			80		100		100	
	r	mm	M8		M8		M10			M10			M12		M12		M12	
	s H9	mm	16		16		16			20			20		20		20	
	t	mm	4.5		5		5			5			5		5		5	

AG-2G-C

Self centering
TONGUE & GROOVE

AG-2G-M

Self centering
METRIC SERRATION

High precision power chucks Ø 225 mm

- EXTRA large through hole
- Centrifugal force compensation
- 3 jaws
- proofline® chucks = fully sealed – low maintenance

Application/customer benefits

- For Workpieces with high demand for concentricity and parallelism
- Fully sealed and low maintenance = suitable for large batch production
- Ideal for dry machining or high pressure coolant

Technical features

- High radial and axial clamping accuracy
- Fully sealed / Oil bath lubricated
- Centrifugal force compensation
- Gripforce can be regulated in process
- **proofline® chucks** = fully sealed – low maintenance

Standard equipment

3-jaw chuck with mounting bolts
Oil

Actual gripping force diagrams

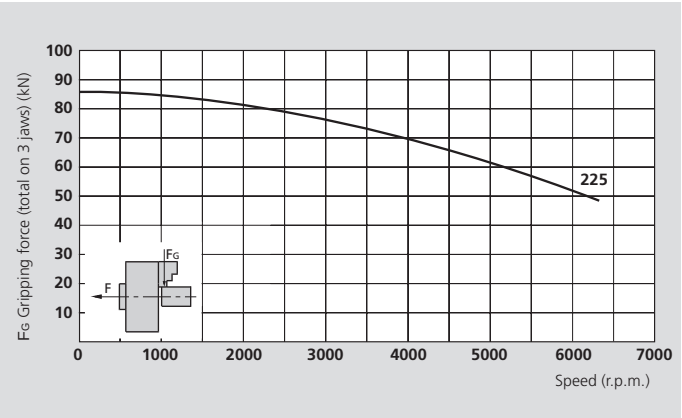

The data in the diagrams refer to 3-jaw-chucks, newly maintained according to their service manuals using SMW-AUTOBLOK K67 grease. The static and dynamic gripping forces have been measured using standard soft top jaws, placed in a position not exceeding the outer diameter of the chuck, with a weight of 0.84 kg/set.

⚠ **Safety advice/danger of damage:**
When using taller/heavier jaws and/or clamping on a bigger diameter reduce draw pull/rotating speed accordingly.

High radial and axial clamping accuracy

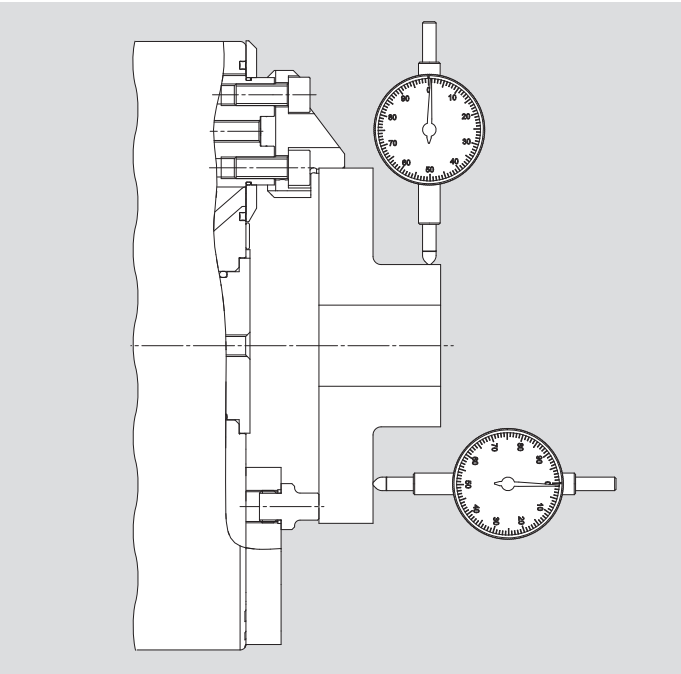

Technical data

SMW-AUTOBLOK Type		AG-2G-C 225	AG-2G-M 225
Number of jaws		**3**	**3**
Radial jaw stroke	mm	6	6
Axial piston stroke	mm	12.2	12.2
Max. draw pull	kN	52	52
Max. gripping force	kN	80	80
Max. speed	r.p.m.	6300	6300
Weight (without top jaws)	kg	27.5	27.5
Moment of inertia	kg·m²	0.18	0.18
Recommended actuating cylinders	**Type**	**SIN-S 125/150**	**SIN-S 125/150**
	Type	**VNK-T2 130-52/150-67**	**VNK-T2 130-52/150-67**

SMW-AUTOBLOK 394

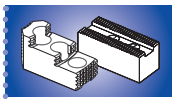
SMW-AUTOBLOK 95

SMW-AUTOBLOK 259

Main dimensions and technical data

AG-2G-C
Self centering
TONGUE & GROOVE

AG-2G-M
Self centering
METRIC SERRATION

Chuck in open position = right end position

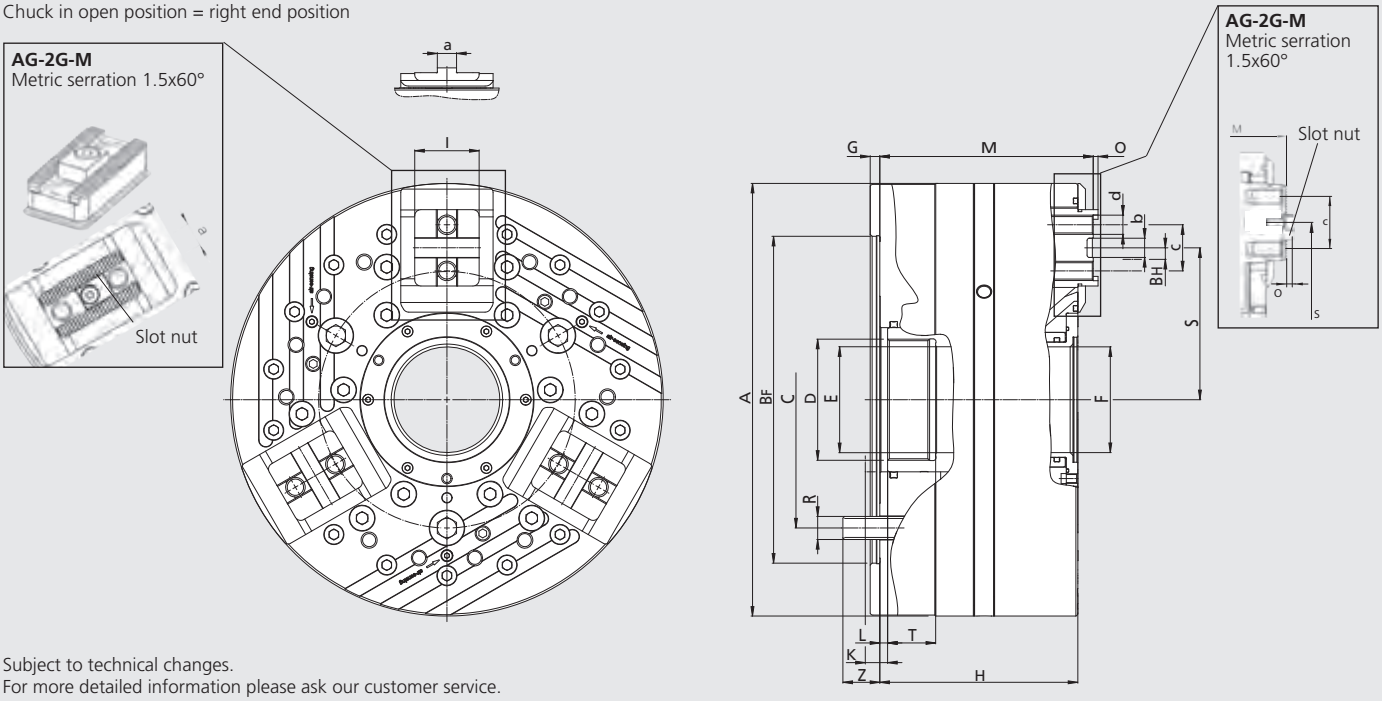

Subject to technical changes.
For more detailed information please ask our customer service.

SMW-AUTOBLOK Type			AG-2G-C 225	AG-2G-M 225
Id. No.			161700	161701
Mounting			Z170	Z170
	A	mm	225	225
	BF	mm	170	170
	C	mm	133.4	133.4
	D		M63x1.5	M63x1.5
	E	mm	55.1	55.1
Through hole	F	mm	55	55
	H	mm	103	103
	I	mm	33.5	33.5
Piston stroke	K	mm	12.2	12.2
Piston position min.	L	mm	-4.35	-4.35
Piston position max.	L	mm	+7.85	+7.85
	M	mm	111	111.4
	N		5	5
	O	mm	2.5	2.1
	R		M12 (3x120°)	M12 (3x120°)
Max.	S	mm	79	79
Min.	S	mm	73	73
	T	mm	25	25
	Z	mm	19.2	19.2
	a	mm	10	10
	b	mm	10	-
	c	mm	24	24

Top jaws for AG-2G

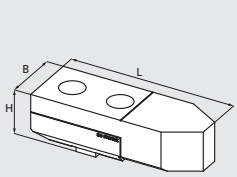

Top jaw WAC
(Tongue and groove)

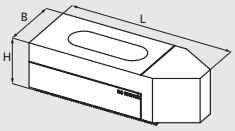

Top Jaw WAM
(Metric serration)

Mounting Kit
WAM

SMW-AUTOBLOK Type	AG-2G-C 225	AG-2G-M 225
Jaw type	WAC	WAM
Id. No. / set	on request	on request
Mounting Kit (only WAM) / set		
Length L		
Width B		
Height H		
Kg / set		

BP-D

INCH SERRATION

BP-M

METRIC SERRATION

High precision power chucks Ø 220 - 320 mm

- Large through hole
- 3 jaws
- proofline® chucks = fully sealed – low maintenance

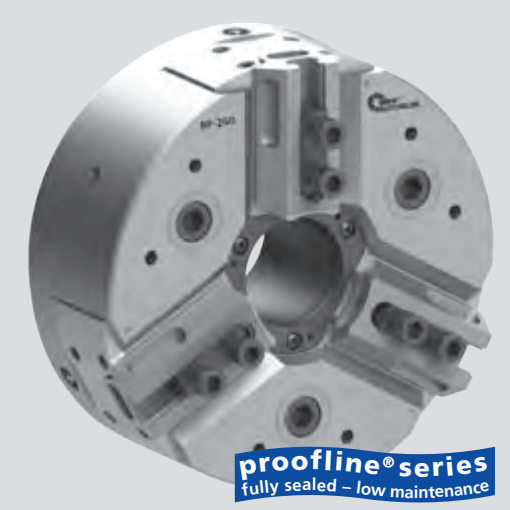

Application/customer benefits

- General use on standard lathes due to the through hole, but with advantage of minimum maintenance and use also in extreme environments
- Longer life at high precision due to less wear
- Fully sealed, ideal for dry machining of castings and forgings or if high pressure coolant is used

BP-D: Master jaws with INCH SERRATION (1/16"x 90°)
BP-M: Master jaws with METRIC SERRATION (1.5 mm x 60°) (suitable for japanese jaws)

Technical features

- Constant gripping force with permanent grease lubrication
- Large through hole compatible with the standard machines
- Chuck body and internal parts case hardened
- **Proofline®chucks** = fully sealed - low maintenance

Standard equipment

3-jaw chuck
1 set T-nuts and bolts
1 set soft top jaws
Mounting bolts

Ordering example

3-jaw chuck BP-D 220/Z170
or
3-jaw chuck BP-M 220/A6

Actual gripping force diagrams

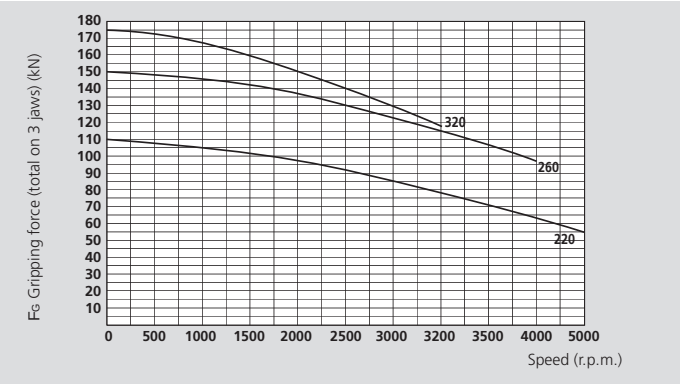

The data in the diagrams refer to 3-jaw-chucks, newly maintained according to their service manuals using SMW-AUTOBLOK K67 grease. The static and dynamic gripping forces have been measured using standard soft top jaws, placed in a position not exceeding the outer diameter of the chuck.

⚠ **Safety advice/danger of damage:**
When using taller/heavier jaws and/or clamping on a bigger diameter reduce draw pull/rotating speed accordingly.

Technical data

SMW-AUTOBLOK Type		BP-D 220 BP-M 220	BP-D 260 BP-M 260	BP-D 320 BP-M 320
Number of jaws		**3**	**3**	**3**
Through-hole	mm	52	66	95
Radial jaw stroke	mm	4	5	5
Axial piston stroke	mm	16	19	19
Max. draw pull*	kN	44	60	68
Max. gripping force*	kN	110	150	175
Max. speed	r.p.m.	5000	4000	3200
Weight (without top jaws)	kg	23	36	60
Moment of inertia	kg·m²	0.14	0.34	0.85
Recommended actuating cylinders		**SIN-S 100/125**	**SIN-S 125/150**	**SIN-S 125/150**
		VNK-T2 130-52	**VNK-T2 150-67**	**VNK-T2 225-95**

* For internal clamping reduce the draw pull by 30 %

SMW-AUTOBLOK 394

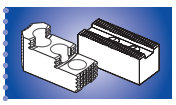
SMW-AUTOBLOK 396

SMW-AUTOBLOK 259

High precision power chucks Ø 220 - 320 mm

- Large through hole
- 3 jaws
- proofline® chucks = fully sealed – low maintenance

BP-D
INCH SERRATION

BP-M
METRIC SERRATION

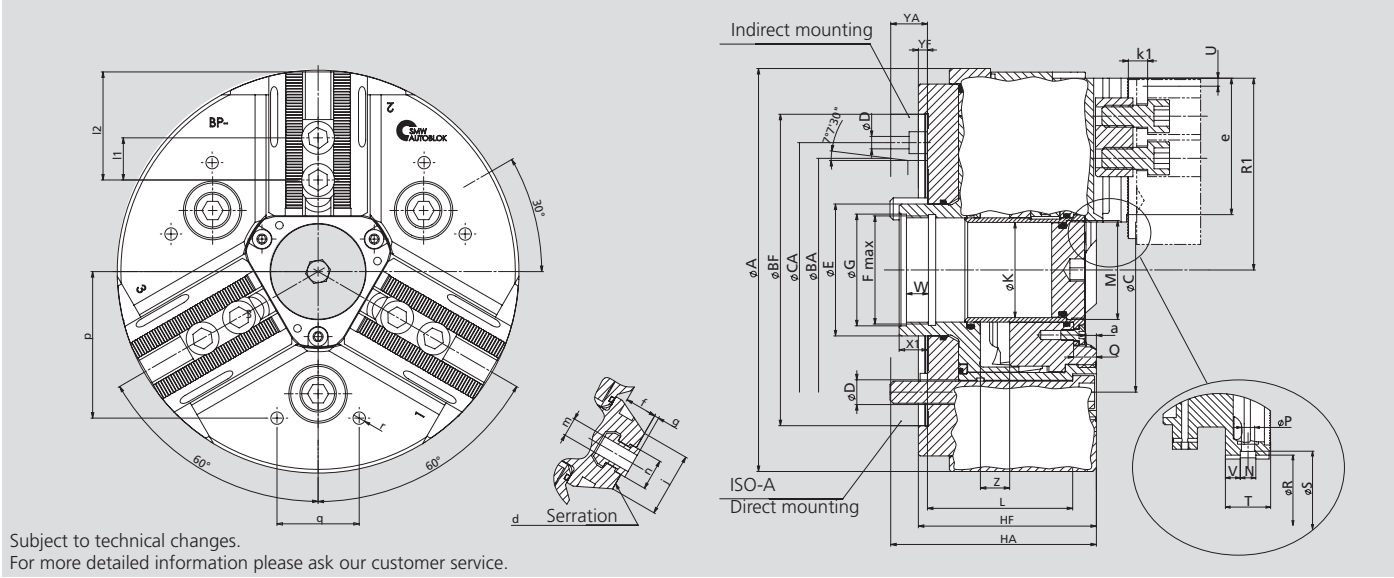

Subject to technical changes.
For more detailed information please ask our customer service.

SMW-AUTOBLOK Type				BP-D 220 BP-M 220		BP-D 260 BP-M 260			BP-D 320 BP-M 320		
Mounting				**Z170**	**A6**	**Z220**	**A6**	**A8**	**Z300**	**A8**	**A11**
	A		mm	220		262			320		
	BF/BA	H6	mm	170	106.375	220	106.375	139.719	300	139.719	196.869
	C		mm	133.4		171.4			235		
	CA		mm	-	-	-	133.4	-	-	171.4	-
	D		mm	13.5		17	13.5	17	21		
	E		mm	72		88			115		
	Fmax		mm	M60 x 1.5		M75 x 2			M102 x 2		
	G		mm	61		76			102.5		
	HF/HA		mm	97.5	109.5	114	149	128	114	149	130
	K		mm	52		66			95		
	L		mm	79.5		92			88		
	M		mm	M54 x 1.5		M68 x 2			M98 x 2		
	N	H8	mm	8		10			10		
	P		mm	6.5		8.5			8.5		
	Q		mm	12.5		16.5			16.5		
	R	H7	mm	59		76			108		
Chuck open	**R1**		mm	109		131			159		
	S		mm	63		81			113		
	T		mm	23.5		22			29		
Jaw stroke	**U**		mm	4.3		5			5		
	V		mm	7.75		6			9.5		
	W		mm	12		14			16.5		
	X1		mm	15.5		22			21		
	YF/YA		mm	5	17	5	40	19	5	40	21
Max./min.	**Z**		mm	16 / 0		19 / 0			19 / 0		
	a		mm	5.7		9.7			9.7		
BP-D Serration	**d**		inch	1/16" x 90°		1/16" x 90°			1/16" x 90°		
BP-M Serration	**d**		mm	1.5x60°		1.5x60°			1.5x60°		
	e		mm	74.5		89			100.5		
	f		mm	17.5		12			19		
	g		mm	2.5		2.5			3.5		
	j		mm	34		35.22			35		
	k1		mm	10.5		12			12		
BP-D/BP-M	**l1**		mm	23 / 25		30			30		
Max./min.	**l2**		mm	55.5 / 33		67 / 43			78 / 43		
BP-D/ BP-M	**m**		mm	M12		M12			M16		
BP-D	**n**	h8	mm	17		17			21		
BP-M	**n**	h8	mm	14		16			21		
	p		mm	80		102			100		
	q		mm	45		60			60		
	r		mm	M8		M10			M10		

BP-C

TONGUE & GROOVE

High precision power chucks Ø 220 - 320 mm

- Large through hole
- 3 jaws
- proofline® chucks = fully sealed – low maintenance

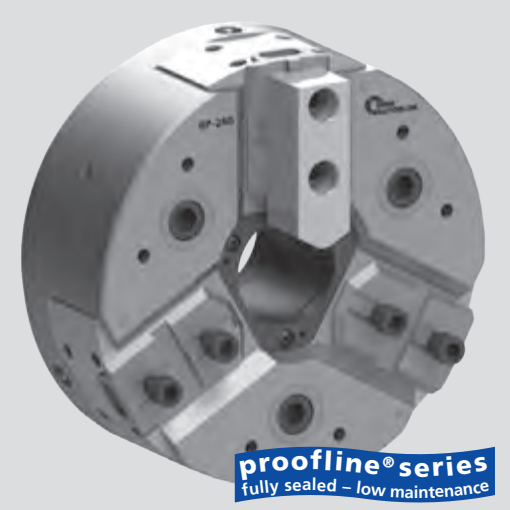

Application/customer benefits

- General use on standard lathes due to the through hole, but with advantage of minimum maintenance and use also in extreme environments
- Longer life at high precision due to less wear
- Fully sealed, ideal for dry machining of castings and forgings or if high pressure coolant is used

BP-C: TONGUE & GROOVE master jaws (American Standard)

Technical features

- Constant gripping force with permanent grease lubrication
- Large through hole compatible with the standard machines
- 3 jaw version available in all diameters
- **Proofline®chucks**= fully sealed - low maintenance

Standard equipment

3-jaw chuck
Mounting bolts

Ordering example

3-jaw chuck BP-C 220/Z170

Actual gripping force diagrams

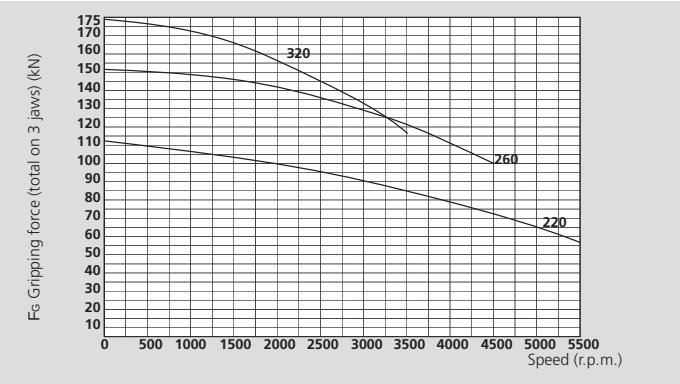

The data in the diagrams refer to 3-jaw-chucks, newly maintained according to their service manuals using SMW-AUTOBLOK K67 grease. The static and dynamic gripping forces have been measured using standard soft top jaws, placed in a position not exceeding the outer diameter of the chuck.

⚠ **Safety advice/danger of damage:**
When using taller/heavier jaws and/or clamping on a bigger diameter reduce draw pull/rotating speed accordingly.

Technical data

SMW-AUTOBLOK Type		BP-C 220	BP-C 260	BP-C 320
Number of jaws		**3**	**3**	**3**
Through-hole	mm	52	66	95
Radial jaw stroke	mm	4	5	5
Axial piston stroke	mm	16	19	19
Max. draw pull*	kN	44	60	68
Max. gripping force*	kN	110	150	175
Max. speed	r.p.m.	5500	4500	3500
Weight (without top jaws)	kg	22	35	59
Moment of inertia	kg·m²	0.14	0.34	0.85
Recommended actuating cylinders		**SIN-S 100/125**	**SIN-S 125/150**	**SIN-S 125/150**
		VNK-T2 130-52	**VNK-T2 150-67**	**VNK-T2 225-95**

* For internal clamping reduce the draw pull by 30 %.

SMW-AUTOBLOK 394

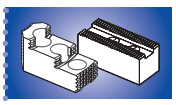
SMW-AUTOBLOK 396

SMW-AUTOBLOK 259

High precision power chucks Ø 220 - 320 mm

- Large through hole
- 3 jaws
- proofline® chucks = fully sealed – low maintenance

BP-C

TONGUE & GROOVE

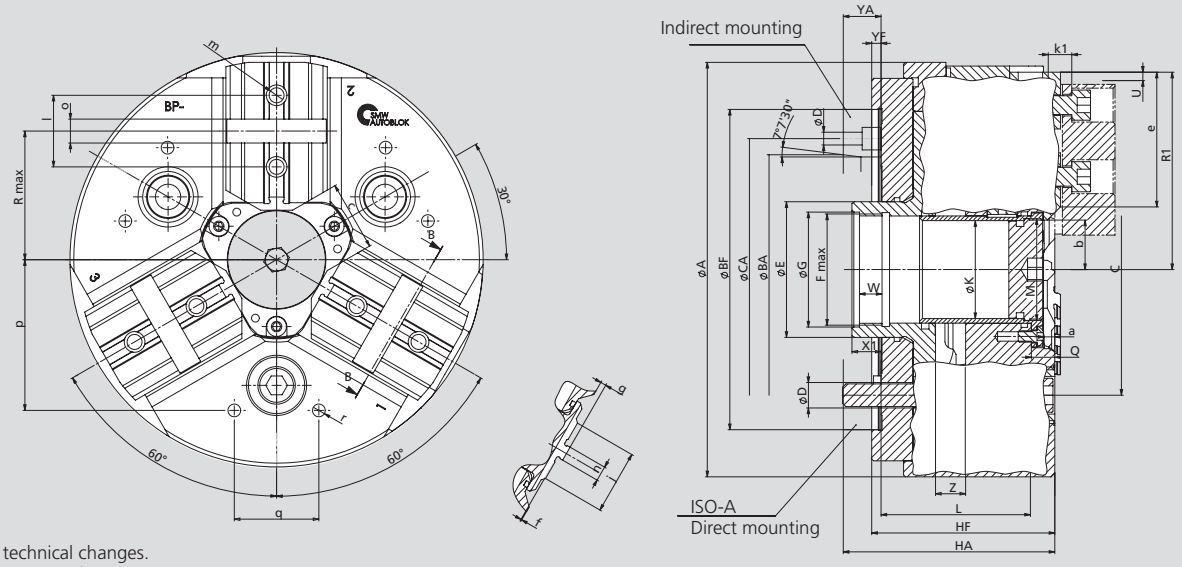

Subject to technical changes.
For more detailed information please ask our customer service.

SMW-AUTOBLOK Type				BP-C 220		BP-C 260			BP-C 320		
Mounting				Z170	A6	Z220	A6	A8	Z300	A8	A11
	A		mm	220			262			320	
	BF/BA	H6	mm	170	106.375	220	106.375	139.719	300	139.719	196.869
	C		mm	133.4			171.4			235	
	CA		mm	-	-	-	133.4	-	-	171.4	-
	D		mm	13.5		17	13.5	17		21	
	E		mm	72			88			115	
	Fmax		mm	M60 x 1.5			M75 x 2			M102 x 2	
	G		mm	61			76			102.5	
	HF/HA		mm	97.5	109.5	114	149	128	114	149	130
	K		mm	52			66			95	
	L		mm	79.5			92			88	
	M		mm	M54 x 1.5			M68 x 2			M98 x 2	
	Q		mm	12.5			16.5			16.5	
Chuck open	R1		mm	109			131			159	
Max.	R		mm	72.5			89			115	
Jaw stroke	U		mm	4.3			5			5	
	W		mm	12			14			16.5	
	X_1		mm	15.5			22			25	
Max./min.	YF/YA		mm	5	17	5	40	19	5	40	21
	Z		mm	16 / 0			19 / 0			19 / 0	
	a		mm	5.7			9.7			9.7	
Min.	b		mm	26.5			36			48	
Min.	c		mm	37			52			70	
	e		mm	74.5			82			98	
	f		mm	0			3			4	
	g		mm	3			0			-1	
	j		mm	34			46			58	
	k_1		mm	9			13.5			15.5	
	l		mm	38			44.4			54	
	m		mm	M10			M12			M16	
	n	h7	mm	7.94			7.94			12.7	
	o	H7	mm	12.68			12.68			19.03	
	p		mm	80			102			100	
	q		mm	45			60			60	
	r		mm	M8			M10			M10	

BB-D

INCH SERRATION

BB-M

METRIC SERRATION

High precision power chucks Ø 140 - 315 mm

■ EXTRA large through hole
■ 3 jaws

Application/customer benefits

- For open center or partial open center clamping
- For machines with very large spindle bore

BB-D: Master jaws with INCH SERRATION (1/16"x 90°)
BB-M: Master jaws with METRIC SERRATION (1.5 mm x 60°)
(Suitable for Japanese chucks top jaws)

Technical features

- Extra large through-hole
- Gripping force transmission via wedge hook
- Case hardened body to assure greatest precision and long chuck life

Standard equipment

3-jaw chuck
1 set T-nuts with bolts
1 set soft top jaws
Mounting bolts

Ordering example

3-jaw chuck BB-D 175/A6
or
3-jaw chuck BB-M 250/Z220

Actual gripping force diagrams

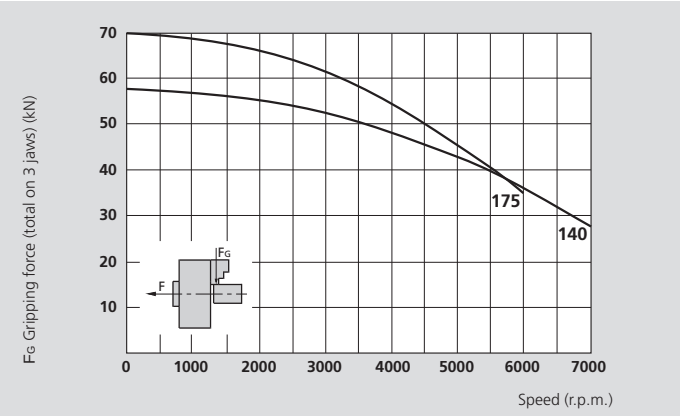

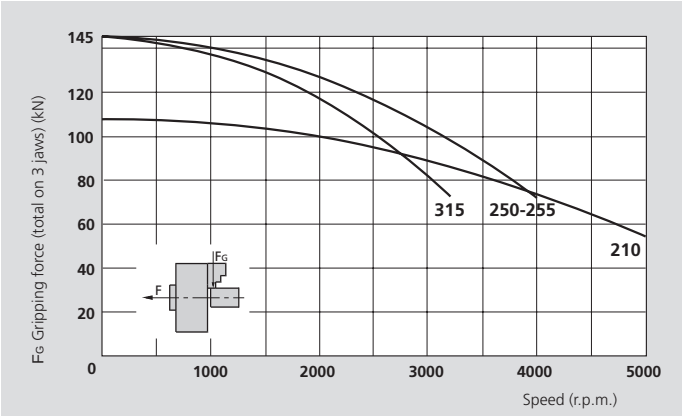

The data in the diagrams refer to 3-jaw-chucks, newly maintained according to their service manuals using SMW-AUTOBLOK K05 grease. The static and dynamic gripping forces have been measured using standard soft top jaws, placed in a position not exceeding the outer diameter of the chuck.

⚠ **Safety advice/danger of damage:**
When using taller/heavier jaws and/or clamping on a bigger diameter reduce draw pull/rotating speed accordingly.

Technical data

SMW-AUTOBLOK Type		BB-D 140 BB-M 140	BB-D 175 BB-M 175	BB-D 210 BB-M 210	BB-D 250 BB-M 250	BB-D 255 BB-M 255	BB-D 315 BB-M 315
Number of jaws		**3**	**3**	**3**	**3**	**3**	**3**
Through-hole	mm	39	56	66	78	82	122
Radial jaw stroke	mm	3.2	3.2	4	5	5	5
Axial piston stroke	mm	15	15	19	24	24	24
Max. draw pull*	kN	22	25	38	50	50	50
Max. gripping force*	kN	58	70	108	145	145	145
Max. speed	r.p.m.	7000	6000	5000	4000	4000	3200
Weight (without top jaws)	kg	6	11.5	19.5	30	33	44
Moment of inertia	kg·m²	0.016	0.05	0.12	0.27	0.32	0.62
Recommended actuating cylinders		**SIN-S 85/100**	**SIN-S 100**	**SIN-S 100/125**	**SIN-S 125/150**	**SIN-S 125/150**	**SIN-S 125/150**
		VNK-T2 70-37	**VNK-T2 130-52**	**VNK-T2 150-67**	**VNK-T2 170-77**	**VNK-T2 176-82**	**VNK-T2 320-127**

* For internal clamping reduce the draw pull by 30 %.

SMW-AUTOBLOK 394

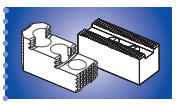

SMW-AUTOBLOK 396

SMW-AUTOBLOK 259

High precision power chucks Ø 140 - 315 mm

- EXTRA large through hole
- 3 jaws

BB-D
INCH SERRATION

BB-M
METRIC SERRATION

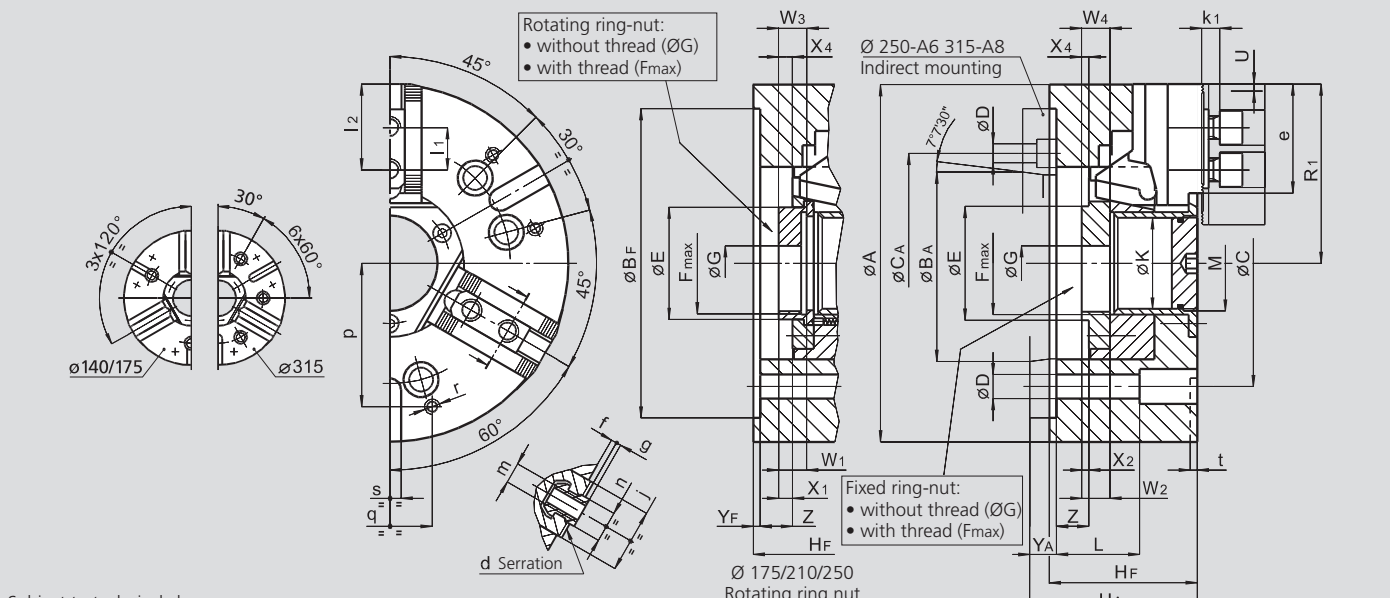

Subject to technical changes.
For more detailed information please ask our customer service.

SMW-AUTOBLOK Type			BB-D 140 BB-M 140		BB-D 175 BB-M 175		BB-D 210 BB-M 210		BB-D 250 BB-M 250			BB-D 255 BB-M 255			BB-D 315 BB-M 315		
Mounting			Z130	A5	Z160	A6	Z170	A6	Z220	A6	A8	Z220	A6	A8	Z300	A8	A11
	A	mm	140		175		210		254			255			315		
	BF/BA H6	mm	130	82.563	160	106.375	170	106.375	220	106.375	139.719	220	106.375	139.719	300	139.719	196.869
	C	mm	104.8		133.4		133.4		171.4	-	171.4	171.4	-	171.4	235	-	235
	CA	mm	-	-	-	-	-	-	-	133.4	-	-	133.4	-	-	171.4	-
	D	mm	11.5		13.5		13.5			13.5	17	17	13.5	17		17	21
	E	mm	53		71		78		92			95			143		
	Fmax	mm	M45 x 1.5		M62 x 1.5		M72 x 1.5		M85 x 2			M90 x 2			M135 x 2		
	G	mm	16		20		20		25			20			70		
	HF/HA	mm	67	77	82	94	92	104	105	124	119	105	124	119	118	143	134
	K	mm	39		56		66		78			82			122		
	L	mm	46		54		66		79			79			72		
	M	mm	M42 x 1.5		M58 x 1.5		M68 x 2		M80 x 2			M84 x 2			M125 x 2		
Chuck open	R1	mm	70		89		106		128			130.5			157.5		
Jaw stroke	U	mm	3.2		3.2		4		5			5			5		
	(1) W1/W2	mm	-/14		18/16		20/18		20/20			20/20			-/23		
	(2) W3/W4	mm	-/14		28/35		30/35		33/38			33/38			-/23		
BB-D	X1/X2	mm	-/6		11/5		12/5		11/6			9/4			-/5		
BB-M	X1/X2 (X4)	mm	-/6 (6)		11/5 (22)		12/5 (22)		11/11 (23)			9/4 (23)			-/5 (5)		
	YF/YA	mm	5	15	5	17	5	17	5	24	19	5	24	19	5	30	21
Max./min.	Z	mm	15/0		15/0		19/0		24/0			24/0			24/0		
BB-D serration	d	inch	1/16" x 90°		1/16" x 90°		1/16" x 90°		1/16" x 90°			1/16" x 90°			1/16" x 90°		
BB-M serration	d	mm	1.5 x 60°		1.5 x 60°		1.5 x 60°		1.5 x 60°			1.5 x 60°			1.5 x 60°		
	e	mm	39		49.5		59		73			72.5			77.5		
	f	mm	2		3		3		4			4			4		
	g	mm	2.5		2.5		2.5		3.5			3.5			3.5		
	j	mm	30		33		38		45			45			45		
	k1	mm	10		10		11		12			12			12		
BB-D	l1	mm	16		16.5		23		30			30			30		
BB-M	l1	mm	16		20		25		30			30			30		
Max./min.	l2	mm	32/23		41/24		49/33		57/43			57/43			62/43		
BB-D	m	mm	M8		M10		M12		M16			M16			M16		
BB-D	n h8	mm	12		14		17		21			21			21		
BB-M	m	mm	M8		M10		M12		M12			M12			M16		
BB-M	n h8	mm	12		12		14		16			16			21		
	p	mm	52		65		80		102			102			100		
	q	mm	30		36		45		60			60			60		
	r	mm	M6		M8		M8		M10			M10			M10		
	s H12	mm	12		16		16		16			16			20		
	t	mm	5		5		5		5			5			5		

(1) Rotating ring-nut with thread W_1=BBD-BBM
Fixed ring-nut with thread W_2=BBD-BBM

(2) Blank rotating ring-nut without thread W_3 = BBD-BBM
Fixed ring-nut blank without thread W_4 = BBD-BBM

Technology at the highest level:

The SMW-AUTOBLOK

HFKN

Wedge bar drive,
minimum loss in gripping force
even at high speeds because of
tangentially supported wedge bars.
Minimum increase of gripping force
(hysteresis) after quick spindle stop

Easy lubrication
even on vertical machines
with 3 radial built-in
grease fittings

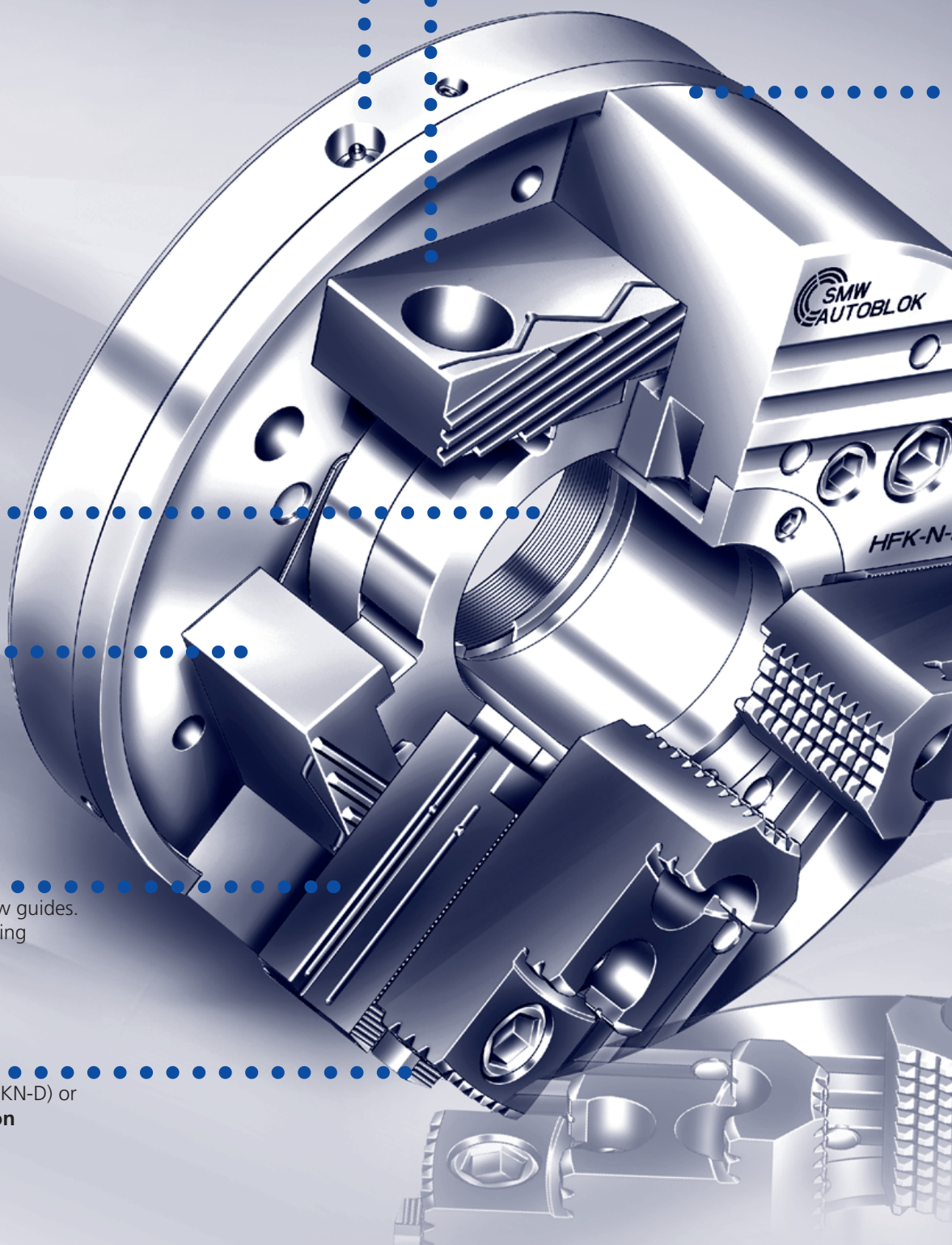

Large through hole
for full use of
spindle bore

High **efficiency** of
the wedge bar drive
ensures highest
concentricity and
repeatability

Extra long, symmetrical jaw guides.
Ideal for O.D. or I.D. gripping

Master jaws with **inch** (HFKN-D) or
metric (HFKN-M) **serration**

wedge bar drive

For high speeds
Flat gripping force curve

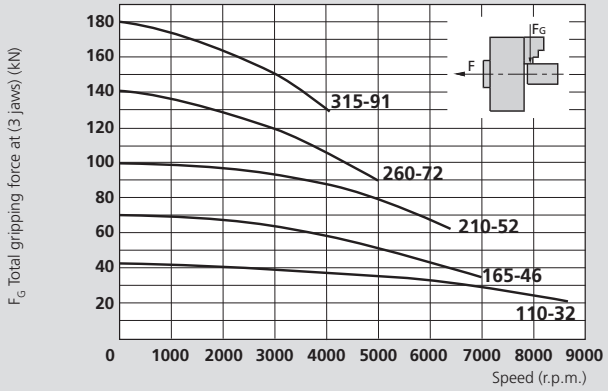

The data in the diagrams refer to 3-jaw-chucks, newly maintained according to their service manuals using SMW-AUTOBLOK K05 grease. The static and dynamic gripping forces have been measured using standard soft top jaws, placed in a position not exceeding the outer diameter of the chuck.

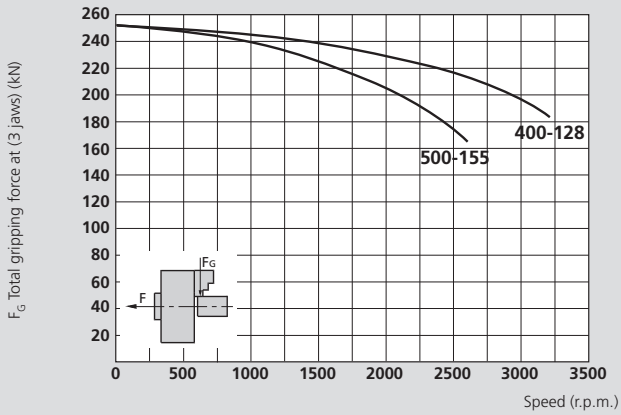

⚠ **Safety advice/danger of damage:**
When using taller/heavier jaws and/or clamping on a bigger diameter reduce draw pull/rotating speed accordingly.

Chuck body and internal parts are **case hardened and ground**.
For highest rigidity, durability and precision

Clamping glossary

Case hardening: The surface of the components is hardened (60 HRC) to a depth of about 1 mm (0.04"). The core shows a high tensile strength and toughness. Compared to partial inductive hardened and nitrited parts the rigidity and the resistance against wear is greatly increased.

Hysteresis: At high speeds the chuck body "grows" due to centrifugal force. The draw pull of the clamping cylinder causes an increase in gripping force which cannot be decreased at a quick spindle stop (or change in speed). This can cause deformation at easily deformed parts.
SMW-AUTOBLOK chucks with wedge bar drive have a very low hysteresis.

Wedge bar drive: The chuck is driven by tangentially mounted wedge bars. This design allows highest repeatability and rigidity. These chucks have very low loss in gripping force due to centrifugal force. The design does not require counterbalance weights which allows highest speeds without vibration.

INCH SERRATION: The connection between top jaws and master jaws is done through serration, T-nuts and bolts according to DIN 6353 (serration 90°, pitch in inches).
This is standard on European chucks. HFKN chucks can be supplied either with inch serration or metric serration.

METRIC SERRATION: The connection between top jaws and master jaws is done through serration, T-nuts and bolts according to ISO 9401 (serration 60°, pitch in mm).
This is standard on Japanese chucks.

Efficiency: Efficiency is the ratio between the calculated theoretical gripping force (disregarding friction) and the actual (measured) gripping force.

HFKN-D | HFKN-M | HFKN-C

INCH SERRATION | **METRIC SERRATION** | **TONGUE & GROOVE** | **Main dimensions and technical data**

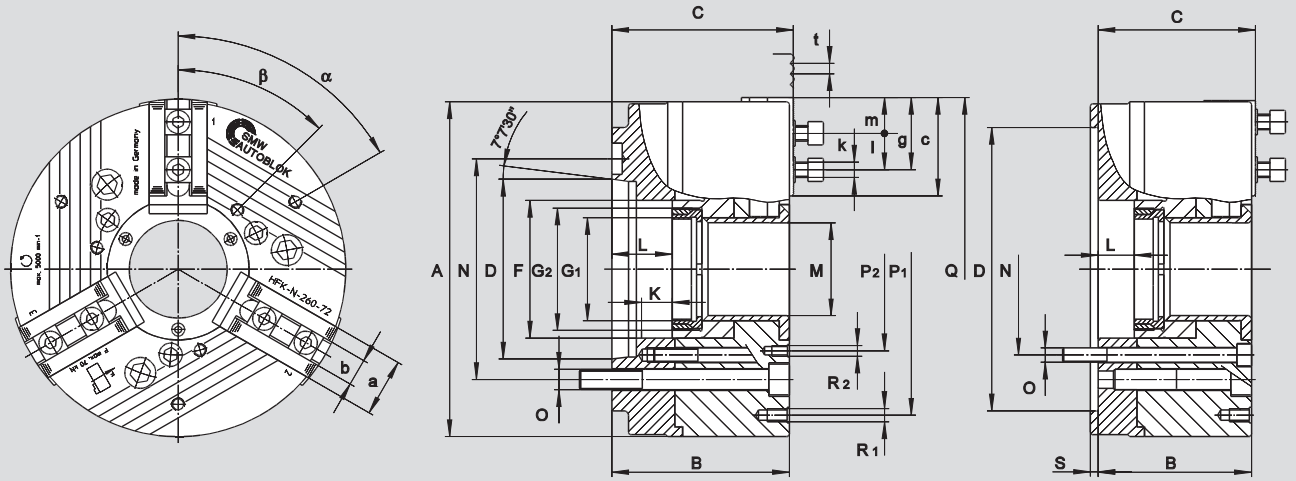

Subject to technical changes.
For more detailed information please ask our customer service.

Type HFKN-D Type HFKN-M Type HFKN-C		110-32 - 110-32		165-46 165-46 -			210-52 210-52 -			260-72 260-72 -				315-91 315-91 -				400-128 400-128 -				500-155 500-155 -		
Mounting		Z100	A4	Z140	A5	A6	Z170	A6	A8	Z170	Z220	A6	A8	Z220	Z300	A8	A11	Z300	Z380	A11	A15	Z380	A11	A15
	A	115		165			215			260				315				400				500		
	B	64	75	90	105	107	102	119	121	119	119	136	138	127	127	146	148	143	143	164	166	157	178	180
	C	68.1	77.5	92.5	107.5	109.5	105	122	124	122	122	139	141	130	130	149	151	148	148	169	171	162	183	185
	D H6	100	63.51	140	82.57	106.39	170	106.39	139.73	170	220	106.39	139.73	220	300	139.73	196.88	300	380	196.88	285.77	380	196.88	285.77
	F	46		67			85			107				134				180				207		
Threaded ring/depth	**G1**	*		*			M60 x 1.5/16			M80 x 2/20				M100 x 2/22				M138 x 2/22				M165 x 2/25		
Piston thread/depth	**G2**	M38 x 1.5/15		M60 x 1.5/18			M75 x 2/19			M95 x 2/23				M120 x 2/25				M160 x 2/25				M185 x 2/28		
Piston stroke	**K**	9		15			19			23				23				30				32		
Max.	**L**	10.5	21.5	15	30	32	19	36	38	23	23	40	42	23	23	42	44	32	32	53	55	33	54	56
	M	32		46			52			72				91				128				155		
Fixing bolt circle	**N**	82.6		104.8	104.8	133.4	133.4	133.4	171.4	133.4	171.4	133.4	171.4	171.4	235	171.4	235	235	330.2	235	330.2	330.2	235	330.2
Fixing bolt	**O**	M10		M10	M10	M12	M12	M12	M16	M12	M16	M12	M16	M16	M20	M16	M20	M20	M24	M20	M24	M24	M20	M24
	P1	100		120			168			210				268				330				430		
	P2	65		90			110			130				155				200				220		
	Q	118		167			219			264				319				408				508		
Thread/thread depth	**R1**	M6/12		M8/16			M10/20			M10/20				M10/20				M12/18				M16/25		
Thread/thread depth	**R2**	M6/12		M8/16			M10/20			M10/20				M10/20				M12/18				M12/18		
	S	6		6			6			6				6				8				8		
	a	20		32			40			45				50				60				60		
	b f7	8 (g6)		14			17			21				21				25.5				25.5		
	c	34		47.5			69			75				92.5				115				150		
	g	25		39			58.5			65.5				74				100				136		
Bolt ISO 4762 12.9	**k**	M6		M10			M12			M16				M16				M20				M20		
	l	12		16			22			28				30				35				35		
	m	2		5			6			8				8				10				10		
HFKN-D inch serration	**t**	1/16" 90°		1/16" 90°			1/16" 90°			1/16" 90°				1/16" 90°				3/32" 90°				3/32" 90°		
HFKN-M metric serration	**t**			1.5 x 60°			1.5 x 60°			1.5 x 60°				1.5 x 60°				3 x 60°				3 x 60°		
HFKN-C tongue & groove		S08 N08																						
	α°	60		40			60			60				60				60				60		
	β°	60		60			60			45				45				60				60		

Stroke per jaw	mm	2.4		4			5.0			6.1				6.1				8.0				8.0		
Max. actuating force	kN	20		35			53			70				95				125				125		
Max. total gripping force	kN	40		70			100			140				190				250				250		
Max. speed	r.p.m.	8500**		7000**			6300			5000				4200				3200				2600		
Weight (without jaws)	kg	4.4	4.7	14	15	15	24	26	26	40	40	43	43	63	63	66	66	111	111	116	116	225	231	231
Moment of inertia	kg·m²	0.007		0.06			0.11			0.38				0.85				2.5				6.5		

Rec. closed center cylinder	**Type**	**SIN-S 85**	**SIN-S 100/125**	**SIN-S 125/150**	**SIN-S 150/175**	**SIN-S 150/175/200**	**SIN-S 175/200**	**SIN-S 175/200**
Rec. open center cylinder	**Type**	**VNK-T2 70-37**	**VNK-T2 102-46**	**VNK-T2 130-52**	**VNK-T2 170-77**	**VNK-T2 225-95**	**VNK-T2 320-127**	**VSG 450-165**

* HFKN 110-32 and HFKN 165-46 available with fixed piston thread only
** Higher speed with special top jaws only

SMW-AUTOBLOK 394

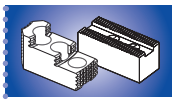
SMW-AUTOBLOK 106

SMW-AUTOBLOK 259

Ordering review HFKN-D (inch serration)

HFKN-D with soft top jaws AWB-D

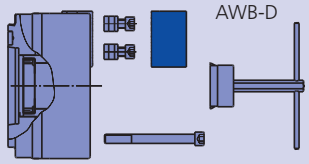

Supply range:
- Chuck + mounting bolts
- Soft top jaws AWB-D
- 1 set (= 6 pieces) T-nuts with bolts
- Key

Size / Spindle mounting	HFKN-D 110-32	HFKN-D 165-46	HFKN-D 210-52	HFKN-D 260-72	HFKN-D 315-91	HFKN-D 400-128	HFKN-D 500-155
Centering rim small	-	-	-	Z 170 090316	Z 220 090320	Z 300 090324	Z 300 090328
Centering rim large	Z 100 065354	Z 140 090310	Z 170 090313	Z 220 090317	Z 300 090321	Z 380 090325	Z 380 090329
A 04	065355	-	-	-	-	-	-
A 05	-	090311	-	-	-	-	-
A 06	-	090312	090314	090318	-	-	-
A 08	-	-	090315	090319	090322	-	-
A 11	-	-	-	-	090323	090326	090330
A 15	-	-	-	-	-	090327	090331

HFKN-D with hardened reversible top jaws MHB-D

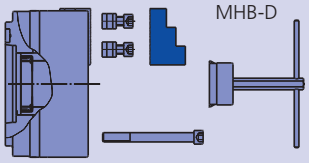

Supply range:
- Chuck + mounting bolts
- Hardened ground reversible top jaws MHB-D
- 1 set (= 6 pieces) T-nuts with bolts
- Key

Size / Spindle mounting	HFKN-D 110-32	HFKN-D 165-46	HFKN-D 210-52	HFKN-D 260-72	HFKN-D 315-91	HFKN-D 400-128	HFKN-D 500-155
Centering rim small	-	-	-	Z 170 090338	Z 220 090342	Z 300 090346	Z 300 090350
Centering rim large	Z 100 065356	Z 140 090332	Z 170 090335	Z 220 090339	Z 300 090343	Z 380 090347	Z 380 090351
A 04	065357	-	-	-	-	-	-
A 05	-	090333	-	-	-	-	-
A 06	-	090334	090336	090340	-	-	-
A 08	-	-	090337	090341	090344	-	-
A 11	-	-	-	-	090345	090348	090352
A 15	-	-	-	-	-	090349	090353

Ordering review HFKN-M/-C (metric serration) / size 110 with tongue and groove

HFKN-M with soft top jaws AWB-M

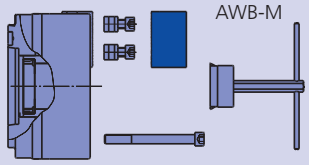

Supply range:
- Chuck + mounting bolts
- Soft top jaws AWB-M
- 1 set (= 6 pieces) T-nuts with bolts
- Key

Size / Spindle mounting	HFKN-C 110-32	HFKN-M 165-46	HFKN-M 210-52	HFKN-M 260-72	HFKN-M 315-91	HFKN-M 400-128	HFKN-M 500-155
Centering rim small	-	-	-	Z 170 090360	Z 220 090364	Z 300 090368	Z 300 090372
Centering rim large	Z 100 065466	Z 140 090354	Z 170 090357	Z 220 090361	Z 300 090365	Z 380 090369	Z 380 090373
A 04	065467	-	-	-	-	-	-
A 05	-	090355	-	-	-	-	-
A 06	-	090356	090358	090362	-	-	-
A 08	-	-	090359	090363	090366	-	-
A 11	-	-	-	-	090367	090370	090374
A 15	-	-	-	-	-	090371	090375

HFKN-M with hardened reversible top jaws MHB-M

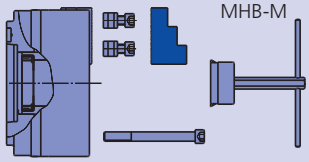

Supply range:
- Chuck + mounting bolts
- Hardened ground reversible top jaws MHB-M
- 1 set (= 6 pieces) T-nuts with bolts
- Key

Size / Spindle mounting		HFKN-M 165-46	HFKN-M 210-52	HFKN-M 260-72	HFKN-M 315-91	HFKN-M 400-128	HFKN-M 500-155
Centering rim small		-	-	Z 170 090382	Z 220 090386	Z 300 090390	Z 300 090394
Centering rim large		Z 140 090376	Z 170 090379	Z 220 090383	Z 300 090387	Z 380 090391	Z 380 090395
A 04		-	-	-	-	-	-
A 05		090377	-	-	-	-	-
A 06		090378	090380	090384	-	-	-
A 08		-	090381	090385	090388	-	-
A 11		-	-	-	090389	090392	090396
A 15		-	-	-	-	090393	090397

HFKN-D | HFKN-M | HFKN-C

HFKN-D INCH SERRATION | **HFKN-M** METRIC SERRATION | **HFKN-C** TONGUE & GROOVE | Jaws

MHB-D (INCH SERRATION)
Hardened reversible top jaws

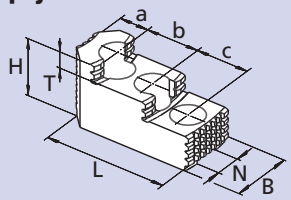

Clamping ranges

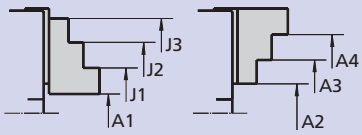

Chuck	HFKN-D 110	HFKN-D 165	HFKN-D 210	HFKN-D 260	HFKN-D 315	HFKN-D 400	HFKN-D 500
Jaw type	MHB-D	MHB-D	MHB-D	MHB-D	MHB-D	MHB-D	MHB-D
Id. No.	007076	12081636	12082036	12083036	12083036	12084546	12084546
Serration	1/16" x 90°	1/16" x 90°	1/16" x 90°	1/16" x 90°	1/16" x 90°	3/32" x 90°	3/32" x 90°
B	20	34	40	45	45	60	60
H	31	39	45	56	56	75	75
L	48	65	82	105	105	140	140
T	7	10	10.5	13.5	13.5	32	19
N	8	14	17	21	21	25.5	25.5
a	9.5	18	19	26	26	38	38
b	12	16	23	30	30	38	38
c	12	16	23	30	30	38	38
kg/set	0.35	0.9	1.71	2.85	2.85	7.5	7.5
A1	5-59	15-75	10-100	15-115	50-170	40-205	80-320
A2	15-70	-	-	-	-	-	-
A3	46-100	62-120	62-150	100-205	115-265	160-330	220-450
A4	70-125	110-175	140-230	185-285	200-350	260-420	320-560
J1	49-102	65-125	65-150	75-165	90-225	120-285	180-410
J2	72-126	115-175	135-230	150-250	160-310	220-385	280-510
J3	101-155	145-210	180-265	225-325	235-380	330-480	370-670

AWB-D (INCH SERRATION)
Soft top jaws

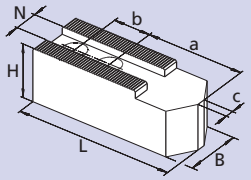

Chuck	HFKN-D 110	HFKN-D 165	HFKN-D 210	HFKN-D 260	HFKN-D 315	HFKN-D 400	HFKN-D 500
Jaw type	AWB-D	AWB-D	AWB-D	AWB-D	AWB-D	AWB-D	AWB-D
Id. No.	038258	035954	081616	081618	081618	081620	081620
Serration	1/16" x 90°	1/16" x 90°	1/16" x 90°	1/16" x 90°	1/16" x 90°	3/32" x 90°	3/32" x 90°
B	20	40	40	50	50	60	60
H	30	40	40	50	50	60	60
L	55	80	90	120	120	140	140
N	8	14	17	21	21	25.5	25.5
a	30	43	53	70	70	80	80
b	12	22	22	28	28	35	35
c	0	4	4	6	6	-	-
kg/set	0.55	2.0	2.7	5.1	5.1	9.65	9.65

MHB-M (METRIC SERRATION)
Hardened reversible top jaws

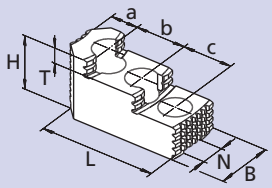

Clamping ranges

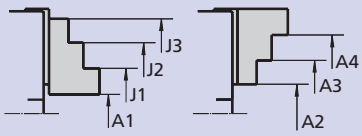

Chuck		HFKN-M 165	HFKN-M 210	HFKN-M 260	HFKN-M 315	HFKN-M 400	HFKN-M 500
Jaw type		MHB-M	MHB-M	MHB-M	MHB-M	MHB-M	MHB-M
Id. No.		12081627	12082127	12082627	12083037	auf Anfrage	auf Anfrage
Serration		1.5 x 60°	1.5 x 60°	1.5 x 60°	1.5 x 60°	3 x 60°	3 x 60°
B		34	40	45	45	55	55
H		39	45	56	56	73	73
L		67	86	100	105	145	145
T		10	10.5	15.5	13.5	32	32
N		12	14	16	21	25.5	25.5
a		14	19	23	26	46	46
b		20	25	30	30	38	38
c		20	25	30	30	38	38
kg/set		0.9	1.8	2.55	2.85	6.7	6.7
A1		15-75	10-100	15-115	50-170	40-190	80-320
A2		-	-	-	-	85-235	125-365
A3		62-120	62-150	100-205	115-265	-	-
A4		110-175	140-230	185-285	200-350	270-420	320-560
J1		65-125	65-150	75-165	90-225	150-300	180-420
J2		115-175	135-230	150-250	160-310	-	-
J3		145-210	180-265	225-325	235-380	330-480	370-610

AWB-M (METRIC SERRATION)
Soft top jaws

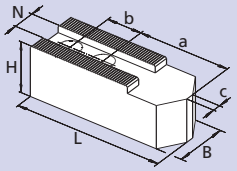

Chuck	HFKN-C 110*	HFKN-M 165	HFKN-M 210	HFKN-M 260	HFKN-M 315	HFKN-M 400	HFKN-M 500
Jaw type	WBR	AWB-M	AWB-M	AWB-M	AWB-M	AWB-M	AWB-M
Id. No.	013843	081719	081720	081722	035957	036791	036791
Serration	S08 N08	1.5 x 60°	1.5 x 60°	1.5 x 60°	1.5 x 60°	3 x 60°	3 x 60°
B	20	30	35	40	50	60	60
H	25	32	40	40	50	60	60
L	53	82	102	125	120	140	140
N	S08 N08	12	14	16	21	25.5	25.5
a	30.5	47	57	65	70	80	80
b	15	20	25	30	30	35	35
c	0	4	4	6	6	-	-
kg/set	0.45	1.4	2.5	3.95	5.1	9.65	-

* Size 110 with TONGUE & GROOVE

JAWS-CATALOG

Request or download: www.smw-autoblok.de

NST
T-nuts suitable for HFKN-D

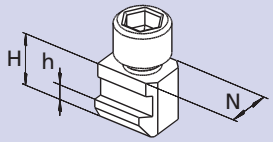

Chuck	HFKN-D 110	HFKN-D 165	HFKN-D 210	HFKN-D 260	HFKN-D 315	HFKN-D 400	HFKN-D 500
T-nut type		NST	NST	NST	NST	NST	NST
Id. No.		035958	034245	034197	034197	014812	014812
N		14	17	21	21	25.5	25.5
H		18.5	20.5	26.5	26.5	29	29
h		6.5	7.5	10	10	11	11
Cyl.-screw ISO 4762-12.9		M10 x 20	M12 x 25	M16 x 35	M16 x 35	M20 x 40	M20 x 40
Torque Md max. (Nm)		50	70	150	150	300	300

NSTE
T-nuts suitable for HFKN-D

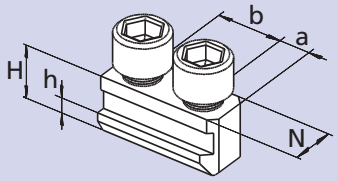

Chuck	HFKN-D 110	HFKN-D 165	HFKN-D 210	HFKN-D 260	HFKN-D 315	HFKN-D 400	HFKN-D 500
T-nut type		NSTE	NSTE	NSTE	NSTE	NSTE	NSTE
Id. No.	038265	73061650	73062150	73063050	73063050	081817	081817
N	8	14	17	21	21	25.5	25.5
H	13.5	18.5	20.5	26.5	26.5	29	29
h	5.0	6.5	7.5	10	10	11	11
a	5	8	10	13	13	16	16
b	12	16	23	30	30	35	35
Cyl.-screw ISO 4762-12.9	M6 x 20	M10 x 20	M12 x 25	M16 x 35	M16 x 35	M20 x 40	M20 x 40
Torque Md max. (Nm)	16	50	70	150	150	300	300

NSTE
T-nuts suitable for HFKN-M

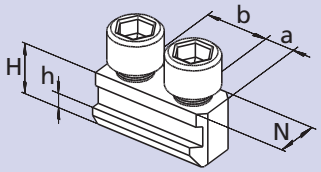

Chuck	HFKN-M 110	HFKN-M 165	HFKN-M 210	HFKN-M 260	HFKN-M 315	HFKN-M 400	HFKN-M 500
T-nut type		NSTE-M	NSTE-M	NSTE-M	NSTE-M	NSTE-M	NSTE-M
Id. No.		73061602	73062101	73062501	73063050	081817	081817
N		12	14	16	21	25.5	25.5
H		18.5	20.5	26.5	26.5	29	29
h		6.5	7.5	10	10	11	11
a		8	10	13	13	16	16
b		20	25	30	30	35	35
Cyl.-screw ISO 4762-12.9		M10 x 20	M12 x 25	M12 x 35	M16 x 35	M20 x 40	M20 x 40
Torque Md max. (Nm)		50	70	70	150	300	300

Important for maintenance and safe operation, to be ordered with the chuck

Grease K05®

Special grease for manual and power chucks

Cartridge 14 Oz. (DIN 1284)
Grease content 500 g
Id. No. 016440

Can 1000 g
Id. No. 011881

- High adhesion
- High resistance against coolant
- High load bearing capacity
- Low friction coefficient
- High gripping force
- Avoids tribocorrosion

Grease gun

Grease gun (DIN 1283) for cartridges 14 Oz. (DIN 1284)
■ Also refillable from grease can 1000 g

Lubrication set Id. No. 083726
Supply range
- Grease gun
- 1 Adapter flexible for high pressure grease nipple
- 1 Adapter for cone grease nipple

Quick jaw change power chucks

Page 110

KNCS®-N
QUICK JAW CHANGE

Quick jaw change power chucks
Ø 140 - 630 mm

- Large through hole
- High speed
- High flexibility: jaws radially adjustable/reversible
- 3 jaws

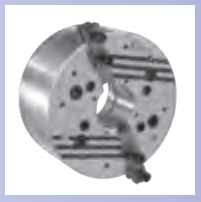

Page 120

KNCS®-N
QUICK JAW CHANGE

Quick jaw change power chucks
Ø 210 - 325 mm

- Large through hole
- High speed
- High flexibility: jaws radially adjustable/reversible
- 2 jaws

Page 124

KNCS®-NB
QUICK JAW CHANGE
Wide master jaws

Quick jaw change power chucks
Ø 210 - 800 mm

- Large through hole
- High flexibility: jaws radially adjustable/reversible
- 3 jaws
- Suitable to take any type of existing top jaws

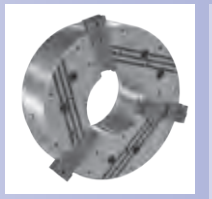

Page 124

KNCS®-NBX
QUICK JAW CHANGE
Wide master jaws – extra large through hole
Quick jaw change power chucks
Ø 425 - 1000 mm

- EXTRA large through hole
- EXTRA long piston guide
- High flexibility: jaws radially adjustable/reversible
- 3 jaws
- Suitable to take any type of existing top jaws

Page 132

KNCS-2G
QUICK JAW CHANGE
Fully sealed

Quick jaw change power chucks
Ø 170 - 630 mm

- Large through hole
- Protection against dust and swarf
- High flexibility: jaws radially adjustable/reversible
- 3 Jaws

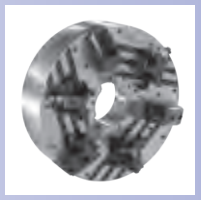

Page 138

KNCS-NB-CL
QUICK JAW CHANGE
Wide master jaws – Radial fine adjustment

Quick jaw change power chucks
Ø 630 mm

- Large through hole
- High flexibility: jaws radially adjustable/reversible
- Integrated fine adjustment
- Suitable to take any type of existing top jaws

Page 140

AP-RC
QUICK JAW CHANGE
TONGUE & GROOVE

AP-RD
QUICK JAW CHANGE
SERRATION

High precision fully sealed power chucks
Ø 170 - 400 mm

- Closed center
- 3 jaws
- **proofline® chucks =** fully sealed – low maintenance

Page 142

NT-RC
QUICK JAW CHANGE
TONGUE & GROOVE

NT-RD
QUICK JAW CHANGE
SERRATION

High precision fully sealed power chucks
Ø 170 - 400 mm

- Centrifugal force compensation
- Closed center
- 3 jaws
- **proofline® chucks =** fully sealed – low maintenance

Fast changeover, fast payback:

The original quick jaw change power chuck

KNCS®-N

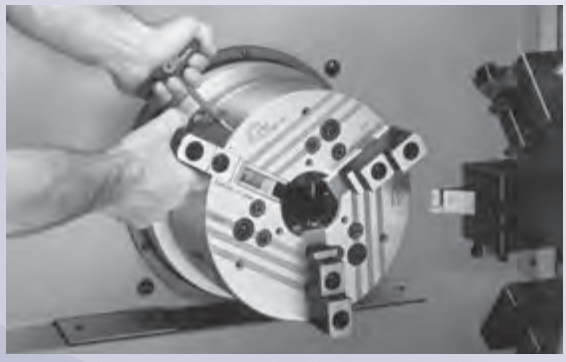

Easy lubrication even on vertical machines with 3 radial built-in grease fittings

Minimal set-up times

Jaw change in less than 1 minute

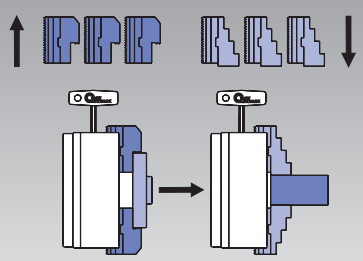

High repeatability when changing jaws

No reboring of already machined jaws necessary, because runout < 0.02 mm (KNCS-N 210)

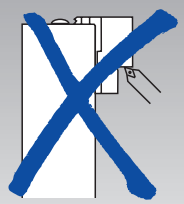

Extra long, symmetrical jaw guides. Ideal for O.D. or I.D. clamping

Unique **wedge bar drive for high speed**. Minimum loss in gripping force because of tangentially supported wedge bars. Minimum increase of gripping force **(hysteresis)** after quick spindle stop. **High efficiency** of the wedge bar drive ensures highest concentricity and **repeatability**. Suitable for **high-low clamping**

Flexibility jaws can be radially adjusted and are reversible = **less jaw sets**

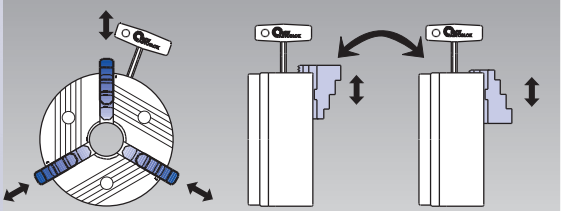

Jaws radially adjustable

Jaws 180° reversed

Direct mounting

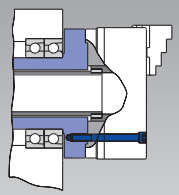

Recess and bolt circle to DIN 55026

Original SMW-AUTOBLOK quick **jaw change**.
Jaw change accuracy with patented **jaw safety interlock**

Profitability

Example set-up times/costs

	Conventional chuck	KNCS®-N
Jaw change	10 Min.	1 Min.
Reboring of jaws	20 Min.	0 Min.
Ø jaw changes/day	2	2
Working days/year	230	230
Machine costs/hour	$ 60.–	$ 60.–
Total costs/year	$ 13 800.–	$ 460.–
Profit*		**$ 13 340.–**

* If jaws are changed more often, the profitability is increased accordingly.

Vertical application

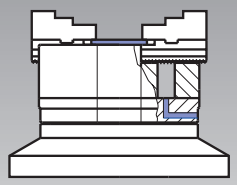

Version for vertical application with cover and drain holes for coolant available.

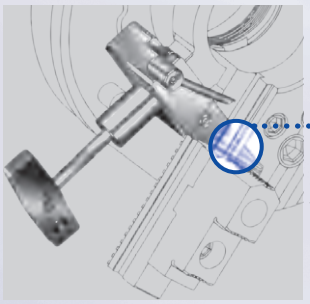

Serration is not fully engaged – jaw safety interlock active.

Clamping glossary

Case hardening: The surface of the components is hardened (60 HRC) to a depth of about 1 mm (0.04”). The core shows a high tensile strength and toughness. Compared to partial inductive hardened and nitrited parts the rigidity and the resistance against wear is greatly increased.

Efficiency: The ratio between the calculated theoretical gripping force (disregarding friction) and the actual (measured) gripping force.

High-low clamping: For easily deformed components. High gripping forces for the rough cut are reduced to low gripping forces for the finish cut without unchucking. This means less deformation on the finished components. Contrarily to wedge hook chucks the **KNCS-N** wedge bar drive is suitable for high-low clamping.

Hysteresis: At high speeds the chuck body “grows” due to centrifugal force. The draw-pull of the clamping cylinder causes an increase in gripping force which cannot be decreased at a quick spindle stop (or change in speed). This can cause deformation at easily deformed parts. **KNCS-N** chucks with wedge bar drive have a very low hysteresis.

Jaw change accuracy: The centering accuracy after a jaw change with once already bored/ground jaws on the chuck. The clamping force on the **KNCS-N** is transmitted via the wedge bar drive.

The engaging/disengaging of the jaws is done by an additional tangential movement of the wedge bars. This proven and patented design with self-acting cleaning of the serration offers a constant high jaw change accuracy after jaw changing.

Jaw safety interlock: At quick jaw change chucks the transmission of the gripping force to the interchangeable clamping jaws is done via a serration. With existing chuck designs misoperation by the operator can cause danger to man and machine if the jaw is not inserted correctly i.e. the serration is not fully engaged.

The **KNCS-N** is equipped with a unique safety interlock:
The built-in safety interlock eliminates misoperation.

Repeatability: The centering accuracy of the chuck equipped with one set of jaws starting from the first up to the last component of a batch. Due to the wedge bar drive **KNCS-N** chucks offer a much higherrepeatability compared to wedge hook chucks.

Wedge bar drive: The chuck is driven by tangentially mounted wedge bars. This design allows highest repeatability and rigidity. These chucks have very low loss in gripping force due to centrifugal force. The design does not require counterbalance weights which allows highest speeds without vibration.

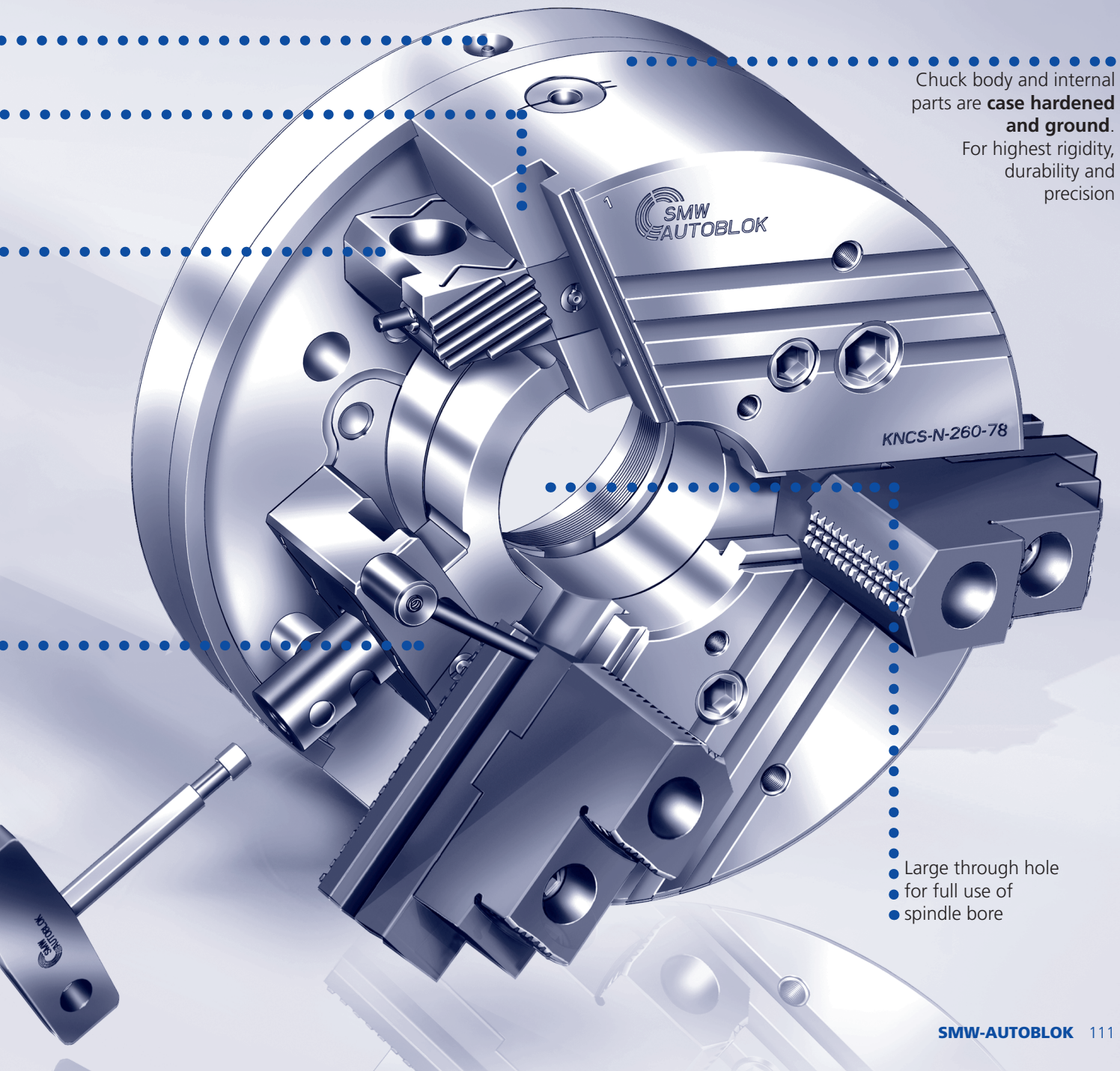

Chuck body and internal parts are **case hardened and ground**. For highest rigidity, durability and precision

Large through hole for full use of spindle bore

KNCS®-N

QUICK JAW CHANGE 3-JAW-CHUCK

Main dimensions and technical data

Jaw position: open position for external clamping

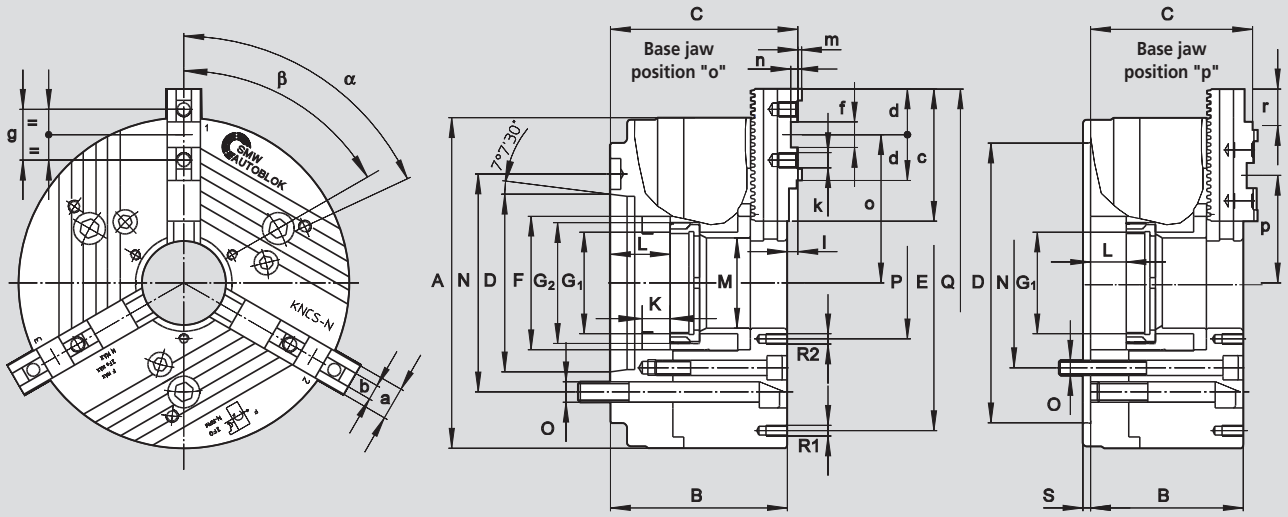

Subject to technical changes.
For more detailed information please ask our customer service.

Type KNCS-N		140-35		170-43			210-52			225-66			260-78				275-86		
Mounting	**Size**	**Z120**	**A5**	**Z140**	**A5**	**A6**	**Z170**	**A6**	**A8**	**Z170**	**A6**	**A8**	**Z170**	**Z220**	**A6**	**A8**	**Z220**	**A6***	**A8**
	A	145		175			215			225			260				275		
	B	87	103	98	113	115	105	122	124	105	122	124	120	120	137	139	120	144	139
	C	93.9	109.9	104.9	119.9	121.9	109.9	126.9	128.9	109.9	126.9	128.9	128.3	128.3	145.3	147.3	128.3	152.3	147.3
	D H6	120	82.57	140	82.57	106.39	170	106.39	139.73	170	106.39	139.73	170	220	106.39	139.73	220	106.39	139.73
	E	122		152			168			180			210				210		
	F	52		67			85			95			111				122		
Rotating ring nut/depth	**G1**	-**		M50 x 1.5/18**			M60 x 1.5/16			M75 x 1.5/16			M90 x 2/20				M95 x 2/20		
Piston thread/depth	**G2**	M45 x 1.5/18		M60 x 1.5/18			M75 x 2/19			M85 x 2/19			M102 x 2/23				M110 x 2/23		
Piston stroke	**K**	20		20/25			22/25			22/25			25/28				25/28		
Max.	**L**	20	36	25	40	42	25	42	44	25	42	44	28	28	45	47	28	52	47
	M	35		43			52			66			78				86		
Fixing bolt circle	**N**	104.8	104.8	104.8	104.8	133.4	133.4	133.4	171.4	133.4	133.4	171.4	133.4	171.4	133.4	171.4	171.4	133.4	171.4
Fixing bolt	**O**	M10	M10	M10	M10	M12	M12	M12	M16	M12	M12	M16	M12	M16	M12	M16	M16	M12	M16
	P	65		75			72			82			95				105		
	Q	166		195			261			271			307				321		
Thread/Thread depth	**R1**	M8/12		M8/12			M10/12			M10/12			M10/12				M10/18		
Thread/Thread depth	**R2**	M5/10		M5/10			M6/10			M6/10			M8/16				M8/14		
	S	6		6			6			6			6				6		
	a	20		20			22			22			26				26		
	b f7	8		8			10			10			12				12		
	c	56		65			85			85			104				104		
	d	28		28			33			33			36				36		
	f H7	18		18			20			20			20				20		
	g	32		32			40			40			40				40		
Thread/Thread depth	**k**	M8/12		M8/12			M8/13			M8/13			M12/15				M12/15		
	l	6.9		6.9			4.9			4.9			8.3				8.3		
	m	2.5		2.5			2.5			2.5			3				3		
	n	5		5			4.5			4.5			5.5				5.5		
Max./min.	**o**	54/39.9		69/50.2			96.6/68.3			102/69			116.6/83.6				124/85.5		
Max./min.	**p**	54/39.9		60/41.2			77.6/49.3			83/50			84.6/51.6				92/53.5		
Base jaw tooth pitch	**-**	4.7		4.7			4.7			4.7			5.5				5.5		
Base jaw offset	**r**	14.1		18.8			28.3			33			33				38.5		
Base jaw offset	teeth	3		4			6			7			6				7		
α	deg.	95		90			60			60			60				60		
β	deg.	60		60			60			60			60				60		
Stroke per jaw at piston stroke **K**	mm			5.1		20	6.0		22	6.0		22	7.0			25	7.0		25
Stroke per jaw at piston stroke **K** max.	mm	5.1	20	6.8		25	7.0		25	7.0		25	8.0			28	8.0		28
Max. actuating force 3-jaw chuck	kN	25		32			53			53			70				70		
Max. total gripping force 3-jaw chuck	kN	47		60			100			100			135				135		
Max. speed 3-jaw chuck	r.p.m.	6500		6300			6000			5500			4700				4700		
Weight without jaws	kg	9	9.6	14	15	15	24	26	26	26	29	29	40	40	43	43	48	53	50.7
Moment of inertia	kg·m²	0.024		0.06			0.11			0.2			0.38				0.41		
Rec. closed center cyl.	**Type**	**SIN-S 100**		**SIN-S 100/125**			**SIN-S 125/150**			**SIN-S 125/150**			**SIN-S 150/175**				**SIN-S 150/175**		
Rec. open center cyl.	**Type**	**VNK-T2 70-32**		**VNK-T2 102-46**			**VNK-T2 130-52**			**VNK-T2 150-67**			**VNK-T2 170-77**				**VNK-T2 225-95**		

* Indirect mounting
** KNCS-N 140-35 and KNCS-N 170-43 are available with fixed ring nut only

SMW-AUTOBLOK 394

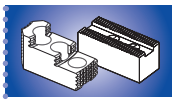
SMW-AUTOBLOK 115

SMW-AUTOBLOK 259

For highest speeds: flat gripping force curve

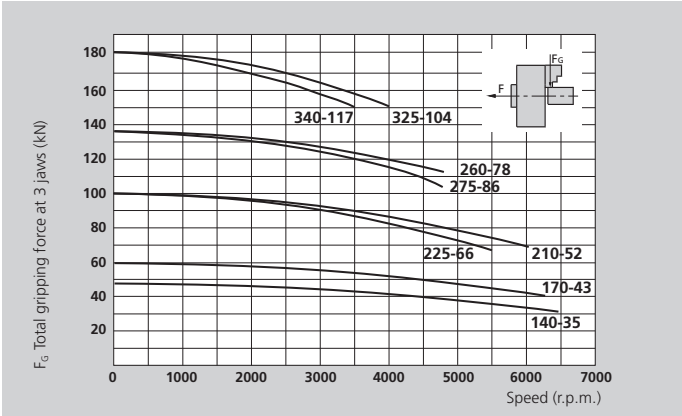

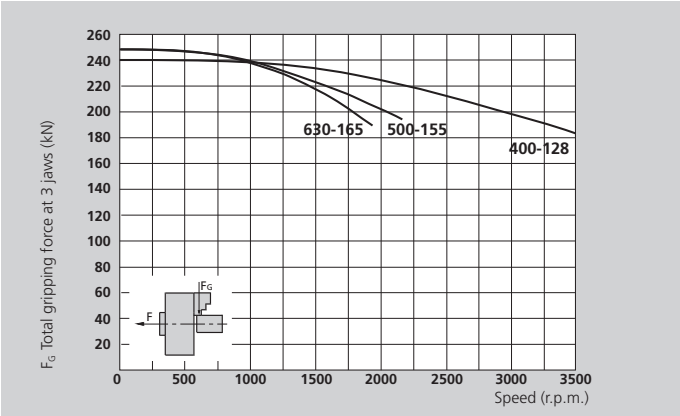

The data in the diagrams refer to 3-jaw-chucks, newly maintained according to their service manuals using SMW-AUTOBLOK K05 grease. The static and dynamic gripping forces have been measured using standard soft top jaws, placed in a position not exceeding the outer diameter of the chuck.

⚠ **Safety advice/danger of damage:**
When using taller/heavier jaws and/or clamping on a bigger diameter reduce draw pull/rotating speed accordingly.

Type KNCS-N		325-104				340-117			400-128				500-155				630-165	
Mounting	**Size**	**Z220**	**Z300**	**A8**	**A11**	**Z300**	**A8***	**A11**	**Z300**	**Z380**	**A11**	**A15**	**Z300**	**Z380**	**A11**	**A15**	**Z380**	**A15**
	A	324				340			400				500				630	
	B	130	130	149	151	130	160	151	140	140	161	163	174	174	195	197	174	197
	C	139.2	139.2	158.2	160.2	139.3	169.3	160.4	149.2	149.2	170.2	172.2	184	184	205	207	184	207
	D H6	220	300	139.73	196.88	300	139.73	196.88	300	380	196.88	285.77	300	380	196.88	285.77	380	285.77
	E	268				270			330				420				585	
	F	144				160			180				207				217	
Rotating ring nut/depth	**G1**	M115 x 2/22				M125 x 2/22			M138 x 2/22				M165 x 2/25				M175 x 2/25	
Piston thread/depth	**G2**	M132 x 2/25				M146 x 2/25			M160 x 2/25				M185 x 2/28				M195 x 2/28	
Piston stroke	**K**	25/28				25/28			32				42				42	
Max.	**L**	28	28	47	49	28	58	49	32	32	53	55	42	42	63	65	42	65
	M	104				117			128				155				165	
Fixing bolt circle	**N**	171.4	235	171.4	235	235	171.4	235	235	330.2	235	330.2	235	330.2	235	330.2	330.2	330.2
Fixing bolt	**O**	M16	M20	M16	M20	M20	M16	M20	M20	M24	M20	M24	M20	M24	M20	M24	M24	
	P	130				140			152				180				195	
	Q	385				400			452				552				643	
Thread/Thread depth	**R1**	M10/16				M10/16			M12/18				M16/25				M16/25	
Thread/Thread depth	**R2**	M10/16				M10/16			M12/18				M12/18				M12/18	
	S	6				6			8				8				8	
	a	32				32			32				45				45	
	b f7	12				12			12				18				18	
	c	115				115			125				160				200	
	d	36				36			43				50				50	
	f H7	20				20			26				30				30	
	g	40				40			54				60				60	
Thread/Thread depth	**k**	M12/17				M12/17			M12/17				M16/34				M16/34	
	l	9.3				9.3			9.3				10				10	
	m	3				3			3				4				4	
	n	6				6			7				9				9	
Max./min.	**o**	155.7/106.2				163.2/113.7			182.3/121.8				225/141				270.5/179.5	
Max./min.	**p**	111.7/62.2				119.2/69.7			143.3/82.2				164/80				170.5/79.5	
Base jaw tooth pitch	**-**	5.5				5.5			5.5				7				7	
Base jaw offset	**r**	49.5				49.5			60.5				84				91	
Base jaw offset	teeth	9				9			11				12				13	
α	deg.	60/35				60/35			20/9x40				20/9x40				20/9 x 40	
β	deg.	60/35				60/35			20/9x40				20/9x40				20/9x40	
Stroke per jaw at piston stroke **K**	mm	7.0			25	7.0		25										
Stroke per jaw at piston stroke **K** max.	mm	8.0			28	8.0		28	8.0			32	10.0			42	10.0	42
Max. actuating force 3-jaw chuck	kN	95				95			115				120				120	
Max. total gripping force 3-jaw chuck	kN	180				180			240				250				250	
Max. speed 3-jaw chuck	r.p.m.	4000				3500			3500				2200				1700	
Weight without jaws	kg	65	65	68	68	77	88.5	82.5	111	111	116	116	225	225	231	231	390	398
Moment of inertia	kg·m²	1.2				1.24			2.5				6.5				18	
Rec. closed center cyl.	**Type**	**SIN-S 150/175/200**				**SIN-S 150/175/200**			**SIN-S 175/200**				**SIN-S 175/200**				**SIN-S 175/200**	
Rec. open center cyl.	**Type**	**VNK-T2 250-110**				**VNK-T2 320-127**			**VNK-T2 320-127**				**VSG 450-165**				**VSG 450-165**	

* Indirect mounting

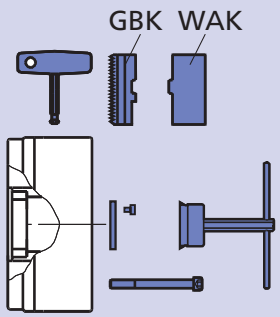

Supply range:

Chuck + key + mounting bolts + mounting key (from diameter 210)
+ 1 set hardened base jaws type GBK + 1 set soft top jaws type WAK
+ 1 set of coverplates

Spindle mounting \ Size	KNCS-N 140-35	KNCS-N 170-43	KNCS-N 210-52	KNCS-N 225-66	KNCS-N 260-78	KNCS-N 275-86	KNCS-N 325-104	KNCS-N 340-117	KNCS-N 400-128	KNCS-N 500-155	KNCS-N 630-165
Centering rim small					Z 170 088900		Z 220 088912		Z 300 088822	Z 300 088889	
Centering rim large	Z 120 088800	Z 140 088802	Z 170 088806	Z 170 088809	Z 220 088901	Z 220 067910	Z 300 088913	Z 300 067920	Z 380 088823	Z 380 088826	Z380 088829
A 05	088801	088803									
A 06		088804	088807	088810	088902	067911					
A 08			088808	088811	088903	067912	088914	067921			
A 11							088915	067922	088824	088827	
A 15									088825	088828	088830

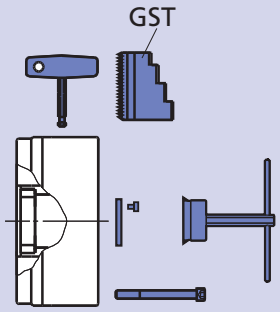

Supply range:

Chuck + key + mounting bolts + mounting key (from diameter 210)
+ 1 set hardened, reversible stepped monoblock jaws type GST, ground on chuck
+ 1 set of coverplates

Spindle mounting \ Size	KNCS-N 140-35	KNCS-N 170-43	KNCS-N 210-52	KNCS-N 225-66	KNCS-N 260-78	KNCS-N 275-86	KNCS-N 325-104	KNCS-N 340-117	KNCS-N 400-128	KNCS-N 500-155	KNCS-N 630-165
Centering rim small					Z 170 088904		Z 220 088916		Z 300 088850	Z 300 088859	
Centering rim large	Z 120 088831	Z 140 088833	Z 170 088836	Z 170 088839	Z 220 088905	Z 220 067913	Z 300 088917	Z 300 067923	Z 380 088851	Z 380 088854	Z380 088857
A 05	088832	088834									
A 06		088835	088837	088840	088906	067914					
A 08			088838	088841	088907	067915	088918	067924			
A 11							088919	067925	088852	088855	
A 15									088853	088856	088858

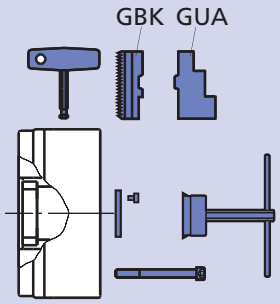

Supply range:

Chuck + key + mounting bolts + mounting key (from diameter 210)
+ 1 set hardened base jaws type GBK
+ 1 set hardened, reversible top jaws type GUA ground on chuck
+ 1 set of coverplates

Spindle mounting \ Size	KNCS-N 140-35	KNCS-N 170-43	KNCS-N 210-52	KNCS-N 225-66	KNCS-N 260-78	KNCS-N 275-86	KNCS-N 325-104	KNCS-N 340-117	KNCS-N 400-128	KNCS-N 500-155	KNCS-N 630-165
Centering rim small					Z 170 088908		Z 220 088920		Z 300 088879	Z 300 088888	
Centering rim large	Z 120 088860	Z 140 088862	Z 170 088865	Z 170 088868	Z 220 088909	Z 220 067916	Z 300 088921	Z 300 067926	Z 380 088880	Z 380 088883	Z380 088886
A 05	088861	088863									
A 06		088864	088866	088869	088910	067917					
A 08			088867	088870	088911	067918	088922	067927			
A 11							088923	067928	088881	088884	
A 15									088882	088885	088887

GBK
Hardened base jaws

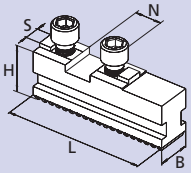

KNCS-N	140	170	210	225	260	275	325	340	400	500	630
Jaw type	GBK 140	GBK 160	GBK 200	GBK 200	GBK 250	GBK 250	GBK 315	GBK 315	GBK 400	GBK 500	GBK 630
Id. No.	012438	012439	012440	012440	012441	012441	012442	012442	012443	012444	012445
B	20	20	22	22	26	26	32	32	32	45	45
H	27.5	27.5	29.5	29.5	37	37	43	43	43	57	57
L	56	65	85	85	104	104	115	115	125	160	200
N	18	18	20	20	20	20	20	20	26	30	30
S	8	8	10	10	12	12	12	12	12	18	18
kg/set	0.6	0.7	1.0	1.0	1.8	1.8	2.7	2.7	3.0	7.1	9.0

WAK
Soft top jaws

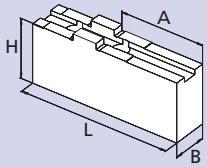

KNCS-N	140	170	210	225	260	275	325	340	400	500	630
Jaw type	WAK 140-10	WAK 160-10	WAK 200-10	WAK 200-10	WAK 250-10	WAK 250-10	WAK 250-10	WAK 250-10	WAK 400-10	WAK 500-10	WAK 500-10
Id. No.	012490	012491	012492	012492	012493	012493	012493	012493	012494	012495	012495
B	20	20	22	22	30	30	30	30	35	50	50
H	35.5	35.5	42	42	50	50	50	50	54	75.5	75.5
L	69	85	105	105	125	125	125	125	145	180	180
A	26	42	50	50	70	70	70	70	74	100	100
kg/set	0.9	1.2	2.0	2.0	3.6	3.6	3.6	3.6	5.8	13.7	13.7

UVB
Soft monoblock jaws

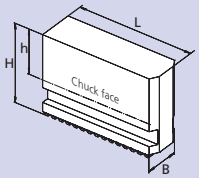

KNCS-N	140	170	210	225	260	275	325	340	400	500	630
Jaw type	UVB 140	UVB 160	UVB 200	UVB 200	UVB 250	UVB 250	UVB 315	UVB 315	UVB 400	UVB 500	UVB 630
Id. No.	012446	012447	012448	012448	012449	012449	012450	012450	012451	012452	012453
B	20	20	22	22	26	26	32	32	32	45	45
H	60	60	70	70	90	90	100	100	100	134	134
h	39.4	39.4	45	45	61	61	66	66	66	87	87
L	59.5	69	83	83	108	108	119	119	146.5	175	230
kg/set	1.5	1.8	2.8	2.8	5.5	5.5	8.2	8.2	10	23	30

GST
Hardened stepped monoblock jaws

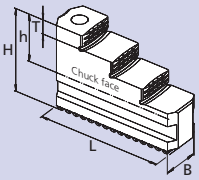

Gripping ranges

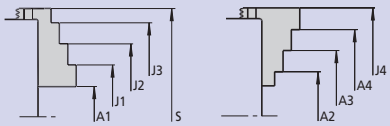

KNCS-N	140	170	210	225	260	275	325	340	400	500	630
Jaw type	GST 160-2	GST 170	GST 210	GST 210	GST 260	GST 260	GST 315	GST 315	GST 400	GST 500	GST 500
Id. No.	012454	035867	035863	035863	037623	037623	012457	012457	012458	012459	012459
B	20	20	22	22	26	26	32	32	32	45	45
H	43.5	43.5	51	51	60	60	66	66	70	93	93
h	23	23	26	26	31	31	32	32	36	46	46
L	58	65	84	84	100	100	117	117	137	175	175
T	7	7	8	8	10	10	10	10	11	20	20
kg/set	0.6	0.7	1.3	1.3	1.9	1.9	3.4	3.4	4.4	11.7	11.7
A1	5-40	6-59	10-85	12-96	10-98	14-113	37-148	46-141	48-173	70-225	38-220
A2	35-70	42-89	56-121	57-132	62-150	66-165	104-215	111-206	116-238	170-320	133-328
A3	66-101	73-120	96-161	97-172	111-200	115-215	160-271	166-261	184-308	315-470	276-458
A4	97-132	104-151	136-201	137-212	161-250	165-265	217-328	221-316	252-378	-	-
J1	39-72	44-78	60-134	62-144	63-149	67-164	91-202	106-196	118-243	-	-
J2	69-103	74-110	100-174	101-185	112-199	116-214	148-259	161-251	186-310	180-330	149-342
J3	99-134	105-141	140-214	141-225	161-249	165-264	205-316	216-308	253-378	325-475	297-492
J4	131-163	135-182	185-250	186-261	212-300	216-315	272-383	281-376	328-448	425-560	385-581
S	166	198	255	266	303	318	385	376	456	585	-

KNCS®-N

QUICK JAW CHANGE
3-JAW-CHUCK

■ Soft top jaws wide version
■ Accessories

WAKS

Soft top jaws
Wide version

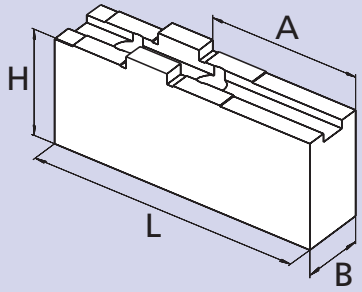

Type	Id. No.	B	H	L	A	kg/ set	SMW-AUTOBLOK Chuck type
WAKS 140-10	012496	35	35.5	63	25	1.5	KNCS-N 140
WAKS 160-10	080931	25	45.5	85	42	1.8	KNCS-N 170
WAKS 160-20	080932	30	50.5	75	35	2.2	
WAKS 160-30	080933	35	75.5	70	26	3.4	
WAKS 200-10	080934	30	51	100	57	2.9	KNCS-N 210
WAKS 200-20	080935	30	66	100	45	3.4	KNCS-N 225
WAKS 200-30	012497	40	36	70	27	1.9	
WAKS 200-31	080936	40	56	90	43	3.9	
WAKS 200-32	036733	40	76	95	52	5.8	
WAKS 250-10	080937	40	55	125	70	3.9	KNCS-N 260
WAKS 250-11	080938	40	75	125	70	7.5	KNCS-N 275
WAKS 250-12	080939	40	95	125	70	9.6	KNCS-N 325
WAKS 250-13	080940	40	115	125	70	11.5	KNCS-N 340
WAKS 250-20	012498	60	55	90	44	6.2	
WAKS 250-21	080942	60	55	110	60	7.6	
WAKS 250-22	080943	60	75	90	44	9.4	
WAKS 250-23	080944	60	75	110	60	11.5	
WAKS 250-30	012499	80	55	90	44	8.5	
WAKS 250-31	080945	80	75	110	60	14.1	
WAKS 400-10	080946	40	54	110	54	4.9	KNCS-N 400
WAKS 400-11	080947	40	54	145	89	6.7	
WAKS 400-12	080948	40	94	145	89	11.1	
WAKS 400-13	080949	40	114	145	89	13.5	
WAKS 400-14	080950	40	146	145	89	16.9	
WAKS 400-20	080951	60	54	110	54	7.6	
WAKS 400-21	080952	60	74	110	54	10.3	
WAKS 400-22	080953	60	94	110	54	14.1	
WAKS 400-30	012500	80	64	100	44	11.0	
WAKS 500-10	080954	60	73	155	90	13.8	KNCS-N 500
WAKS 500-12	080956	60	113	155	90	19.5	KNCS-N 630
WAKS 500-20	080957	80	73	155	90	15.5	
WAKS 500-21	080958	80	93	155	90	26.3	
WAKS 500-30	012501	90	73	130	65	16.4	
WAKS 500-31	012502	100	73	150	85	20.0	

Accessories for KNCS-N / KNCS-NB chucks

Ejector/axial stop

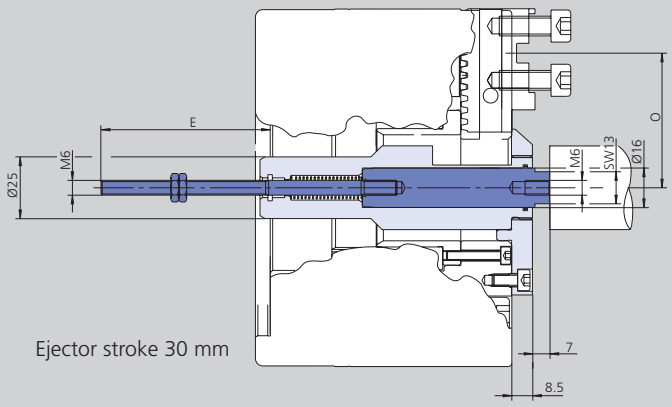

Ejector stroke 30 mm

Coolant flush

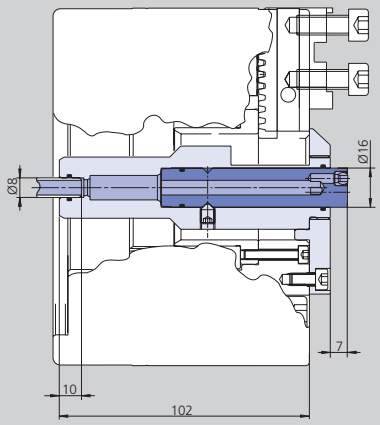

Technical data

SMW-AUTOBLOK Type				KNCS-N 170-43	KNCS-N 210-52	KNCS-N 225-66	KNCS-N 260-78	KNCS-N 275-86
					KNCS-NB 210-52	KNCS-NB 225-66	KNCS-NB 260-78	KNCS-NB 275-86
Ejector		E	mm	68.5	61.5	61.5	46.5	46.5
Ejector	min./max.	O	mm	69	68.3/77.8	73.7/83.1	88.6/105.1	91/113
Ejector/axial flush			Id. No.	174140	174142	273530	274140	175000
Coolant flush basic kit	min./max.	O	mm	69	68.3/77.8	73.7/83.1	88.6/105.1	91/113
Coolant flush basic kit			Id. No.	175001	175002	273531	274141	175005
Coolant flush premium kit	min./max.	O	mm	59.6/69	68.3/96.6	73.8/120	89.1/116.6	91/124
Coolant flush premium kit			Id. No.	176021	176022	273532	274142	176025

■ Hard roughing top jaws
■ Stop pins

Type	Id. No.	B	H	T	G	N	S	b	L	kg/ set	SMW-AUTOBLOK Chuck type	Clamping range Ø external A_1	Clamping range Ø internal J_1	Clamping range Ø external A_2	Clamping range Ø internal J_2
GGK 1751	012464	25	40	16	M5	8	18	32	64	0.9	KNCS-N 140	28-53	125-162	-	-
GGK 1752	012465								68	1.0		36-56	128-168	-	-
GGK 1753	012466								60	1.0		55-81	101-135	-	-
GGK 1754	012467								56	0.9		80-105	75-109	-	-
GGK 1751	012464	25	40	16	M5	8	18	32	64	0.9	KNCS-N 170	25-62	133-171	33-80	155-190
GGK 1752	012465								68	1.0		32-61	134-172	42-79	153-181
GGK 1753	012466								60	1.0		52-89	107-145	70-107	125-163
GGK 1754	012467								56	0.9		77-115	81-118	95-133	99-137
GGK 2001	012469	28	45	20	M5	10	20	40	87	1.9	KNCS-N 210	29-59	187-252	36-87	-
GGK 2002	012470								66	1.3		57-122	121-186	94-150	158-215
GGK 2003	012471								66	1.3		93-149	85-140	131-187	122-178
GGK 2004	012472								85	1.7		152-208	62-100	189-246	72-137
GGK 2001	012469	28	45	20	M5	10	20	40	87	1.9	KNCS-N 225	30-69	-	45-106	-
GGK 2002	012470								66	1.3		67-132	131-197	105-170	169-235
GGK 2003	012471								66	1.3		104-169	95-160	141-207	134-199
GGK 2004	012472								85	1.7		-	68-110	-	74-148
GGK 2501	012473	40	50	22	M6	12	20	40	94	3.0	KNCS-N 260	45-85	197-274	61-148	254-342
GGK 2502	012474								72	2.3		78-154	132-208	141-218	195-272
GGK 2503	012475								78	2.6		107-184	109-175	159-247	152-238
GGK 2504	012476								108	3.2		-	-	-	80-156
GGK 2501	012473	40	50	22	M6	12	20	40	94	3.0	KNCS-N 275	49-100	201-289	65-163	258-357
GGK 2502	012474								72	2.3		82-169	136-223	145-233	199-287
GGK 2503	012475								78	2.6		111-199	113-190	163-262	156-253
GGK 2504	012476								108	3.2		-	-	-	84-171
GGK 2501	012473	40	50	22	M6	12	20	40	94	3.0	KNCS-N 325	40-126	207-320	104-214	295-406
GGK 2502	012474								72	2.3		86-196	138-248	173-284	225-336
GGK 2503	012475								78	2.6		115-226	109-218	203-314	196-306
GGK 2505	012477								84	2.8		197-285	78-164	261-371	139-249
GGK 2501	012473	40	50	22	M6	12	20	40	94	3.0	KNCS-N 340	60-126	236-326	-	326-396
GGK 2502	012474								72	2.3		116-201	-	196-288	-
GGK 2503	012475								78	2.6		-	136-236	232-318	-
GGK 2504	012476								84	2.8		-	108-186	-	-
GGK 4001	012478	50	55	25	M8	12	26	54	104	4.8	KNCS-N 400	78-188	258-378	143-263	333-453
GGK 4002	012479								91	3.5		-	140-263	258-378	-
GGK 4003	012480								147	3.6		-	118-243	-	-
GGK 5001	012481	60	74	35	M8	18	30	60	125	8.8	KNCS-N 500	100-210	280-420	210-350	415-560
GGK 5002	012482								108	6.7		-	155-295	330-470	-
GGK 5003	012483	50	74	35	M8	18	30	60	130	6.2		-	100-240	-	-
GGK 5001	012481	60	74	35	M8	18	30	60	125	8.8	KNCS-N 630	80-240	265-450	240-440	460-650
GGK 5002	012482								108	6.7		-	140-320	380-560	-

GGK
Hard roughing jaw

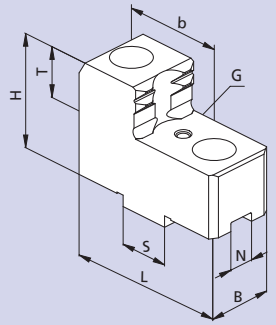

GGK
Clamping ranges

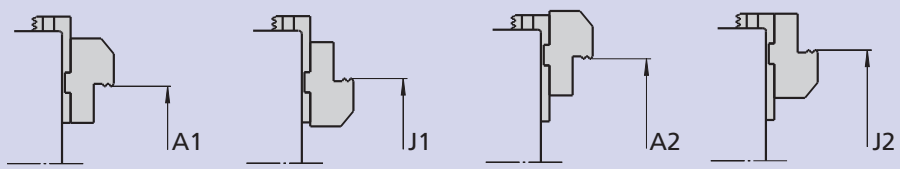

Base jaw position „p“ Base jaw position „o“

ALB
Stop pins

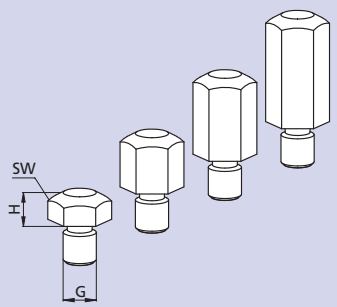

SMW-AUTOBLOK Type	Id. No.	G	H	SW
ALB 505	016510	M5	5	10
ALB 510	016508		10	
ALB 515	016509		15	
ALB 605	016513	M6	5	10
ALB 610	016511		10	
ALB 615	016512		15	
ALB 620	017602		20	
ALB 805	017603		5	13
ALB 810	016514		10	
ALB 815	016515	M8	15	
ALB 820	016516		20	
ALB 825	081191		25	

GUA

Hardened reversible top jaws

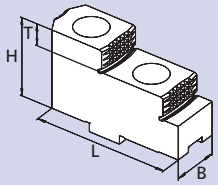

Gripping ranges

Base jaw position "o"

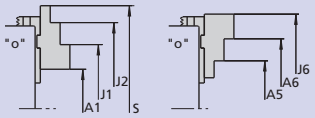

Base jaw position "p"

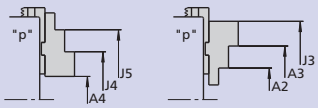

KNCS-N	140	170	210	225	260	275	325	340	400	500	630
Jaw type	GUA 160	GUA 160	GUA 200	GUA 200	GUA 250	GUA 250	GUA 250	GUA 250	GUA 400	GUA 500	GUA 500
Id. No.	012484	012484	012485	012485	012486	012486	012486	012486	012487	012488	012488
B	20	20	22	22	30	30	30	30	36	45	45
H	32.5	32.5	39	38	50	50	50	50	56	73	70
L	63	63	72	72	90	90	90	90	105	130	130
T	7.5	7.5	10	10	14	14	14	14	15	20	20
kg/set	0.6	0.6	0.8	0.8	1.9	1.9	1.9	1.9	3.2	10.8	10.8
A1	17-42	32-69	55-111	65-131	73-150	77-165	118-228	146-231	138-258	153-339	232-430
A2	63-89	60-98	69-125	79-145	45-90	49-105	43-143	74-146	78-188	65-209	68-224
A3	88-115	85-123	96-152	106-172	125-170	129-185	124-223	156-226	186-298	185-329	188-344
A4	17-42	13-51	17-73	27-93	20-86	24-161	30-141	62-214	60-183	31-217	34-323
A5	63-89	78-116	104-163	117-183	76-154	80-169	120-230	146-231	143-268	145-331	224-422
A6	88-115	103-141	131-190	144-210	156-234	160-249	200-310	231-311	253-378	265-451	344-542
J1	77-101	91-129	117-174	128-194	152-229	156-244	198-308	228-311	218-338	258-444	337-535
J2	101-126	116-154	144-201	155-221	233-310	237-325	278-388	306-391	328-448	378-564	457-655
J3	146-172	144-181	158-215	169-235	204-249	208-264	202-302	234-306	263-380	290-434	293-449
J4	77-101	74-111	80-136	90-156	101-166	105-181	111-221	136-226	138-263	136-322	139-337
J5	101-126	99-136	107-163	117-183	180-246	184-261	191-301	224-306	248-373	256-442	259-457
J6	146-172	162-200	193-253	207-273	235-312	239-327	279-389	302-391	333-458	370-556	449-647
S	167	197	264	275	331	347	409	424	481	552	643

JAWS-CATALOG

Request or download:
www.smw-autoblok.de

Important for maintenance and safe operation, to be ordered with the chuck

Grease K05®

Special grease for manual and power chucks

Cartridge 14 Oz. (DIN 1284)
Grease content 500 g
Id. No. 016440

Can 1000 g
Id. No. 011881

- High adhesion
- High resistance against coolant
- High load bearing capacity
- Low friction coefficient
- High gripping force
- Avoids tribocorrosion

Grease gun

Grease gun (DIN 1283) for cartridges 14 Oz. (DIN 1284)
■ Also refillable from grease can 1000 g.

Lubrication set Id. No. 083726
Supply range
- Grease gun
- 1 Adapter flexible for high pressure grease nipple
- 1 Adapter for cone grease nipple

3

KNCS®-N

QUICK JAW CHANGE
2-JAW-CHUCK

Main dimensions and technical data

Jaw position: open position for external clamping

Base jaw position „o" **Base jaw position „p"**

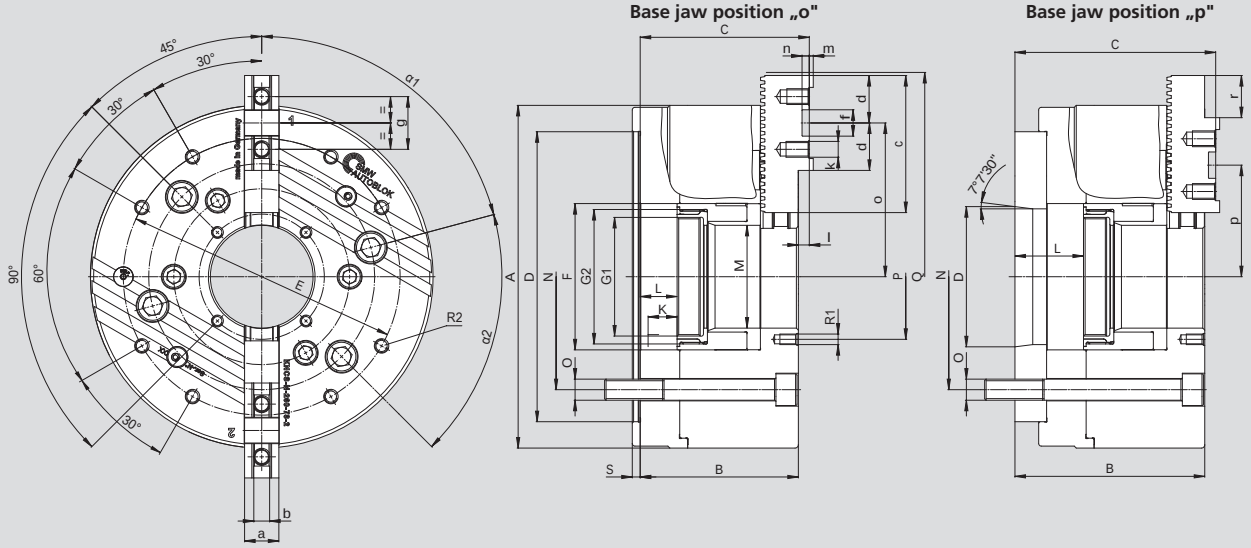

Subject to technical changes.
For more detailed information please ask our customer service.

Type KNCS-N		KNCS-N-210-52-2			KNCS-N-260-78-2				KNCS-N-325-104-2			
Mounting		**Z170**	**A06**	**A08**	**Z170**	**Z220**	**A06**	**A08**	**Z220**	**Z300**	**A08**	**A11**
	A	215			260				324			
	B	105	122	124	120	120	137	139	129.9	129.9	148.9	150.9
	C	109.9	126.9	128.9	128.3	128.3	145.3	147.3	139.2	139.2	158.2	160.2
	D H6	170	106.375	139.719	170	220	106.375	139.719	220	300	139.719	196.869
	E	168			210				268			
	F	85			111				144			
Rotating ring nut/depth	**G1**	M60x1.5 / 16			M90x2.0 / 20				M115x2.0 / 22			
Piston thread/depth	**G2**	M75x2.0 / 19			M102x2.0 / 23				M132x2.0 / 25			
Piston stroke	**K**	25			28				28			
Max.	**L**	25	42	44	28	28	45	47	28.1	28.1	47.1	49.1
	M	52			78				104			
Fixing bolt circle	**N**	133.4		171.4	133.4	171.4	133.4	171.4	171.4	235.0	171.4	235.0
Fixing bolt	**O**	M12		M16	M12	M16	M12	M16	M16	M20	M16	M20
	P	72			95				130			
Max. Ø	**Q**	261			307				385			
Thread / Thread depth	**R1**	M6 / 10			M8 / 14				M10/16			
Thread / Thread depth	**R2**	M10 / 12			M10 / 18				M10/16			
	S	6			6				6			
	a	22			26				32			
	b f7	10			12				12			
	c	85			104				115			
	d	33			36				36			
	f H7	20			20				20			
	g	40			40				40			
Thread / Thread depth	**k**	M8 / 13			M12 / 17				M12 / 17			
	l	4.9			8.3				9.3			
	m	2.5			3				3			
	n	4.5			5.5				6			
Max. / min.	**o**	96.72 / 68.45			116.65 / 83.65				155.783 / 106.301			
Max. / min.	**p**	77.74 / 49.47			84.66 / 51.66				111.781 / 62.299			
Base jaw tooth pitch	**-**	4.7			5.5				5.5			
Base jaw offset	**r**	28.27			32.988				49.482			
Base jaw offset	teeth	6			6				9			
α1 / α2 (for fixing bolts)	deg.	73.5 / 60			75 / 60				75 / 60			
Stroke per jaw at piston stroke **K**	mm	7 / 25			8 / 28				8 / 28			
Max. actuating force	kN	35			47				63			
Max. total gripping	kN	66			90				120			
Max. speed	r.p.m.	5000			4000				3500			
Weight without jaws	kg	27.8	29.3	30.0	45.1	44.5	46.6	47.3	72.3	77.3	75.2	82.8
Moment of inertia	kg·m²	0.17	0.18	0.19	0.41	0.41	0.43	0.44	1.09	1.17	1.11	1.26
Rec. closed center cylinder	**Type**	**SIN-S 125 / 150**			**SIN-S 150 / 175**				**SIN-S 150 / 175 / 200**			
Rec. open center cylinder	**Type**	**VNK-T2 130-52**			**VNK-T2 170-77**				**VNK-T2 250-110**			

Gripping force diagram

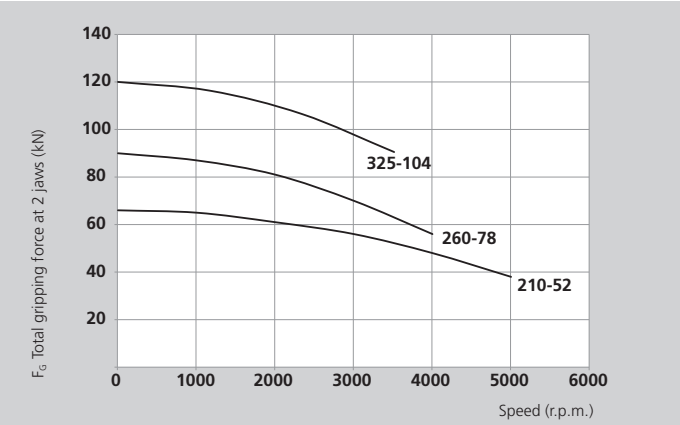

The data in the diagrams refer to 2-jaw-chucks, newly maintained according to their service manuals using SMW-AUTOBLOK K05 grease. The static and dynamic gripping forces have been measured using standard soft top jaws, placed in a position not exceeding the outer diameter of the chuck.

⚠ **Safety advice/danger of damage:**
When using taller / heavier jaws and / or clamping on a bigger diameter reduce draw pull / rotating speed accordingly.

3

Ordering review

KNCS-N + GBK + WAK

Supply range:
Chuck + key + mounting bolts + mounting key + 1 set hardened base jaws type GBK + 1 set soft top jaws type WAK + 1 set of coverplates

Size / Spindle mounting	KNCS-N 210-52	KNCS-N 260-78	KNCS-N 325-104
Centering rim small	-	Z 170 162014	Z 220 161859
Centering rim large	Z 170 162034	Z 220 162015	Z 300 161860
A 06	162037	162020	-
A 08	162040	162021	161861
A 11	-	-	161862

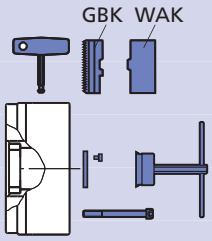

GBK
Hardened base jaws

KNCS-N	210	260	325
Jaw type	GBK 200	GBK 250	GBK 315
Id. No.	012440-2	012441-2	012442-2
B	22	26	32
H	29.5	37	43
L	85	104	115
N	20	20	20
S	10	12	12
kg / set	0.7	1.3	1.9

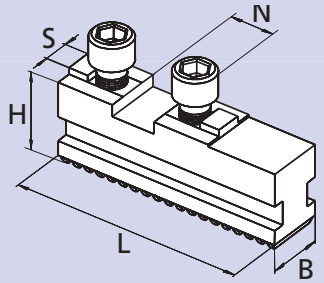

WAK
Soft top jaws

KNCS-N	210	260	325
Jaw type	WAK 200-10	WAK 250-10	WAK 250-10
Id. No.	012492-2	012493-2	012493-2
B	22	30	30
H	42	50	50
L	105	125	125
A	50	70	70
kg / set	1.3	2.5	2.5

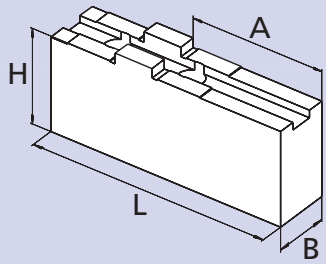

UVB
Soft monoblock jaws

KNCS-N	210	260	325
Jaw type	UVB 200	UVB 250	UVB 315
Id. No.	012448-2	012449-2	012450-2
B	22	26	32
H	70	90	100
h	45	61	66
L	83	108	119
kg / set	1.8	3.7	5.5

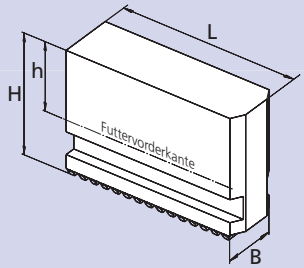

Soft top jaws wide version

WAKS
Soft top jaws
Wide version

Type	Id. No.	B	H	L	A	kg / set	SMW-AUTOBLOK Chuck type
WAKS 200-10	080934-2	30	51	100	57	2.1	
WAKS 200-20	080935-2	30	66	100	45	2.7	
WAKS 200-30	012497-2	40	36	70	27	1.4	KNCS-N 210
WAKS 200-31	080936-2	40	56	90	43	2.7	
WAKS 200-32	036733-2	40	76	95	52	4.1	
WAKS 250-10	080937-2	40	55	125	70	3.8	
WAKS 250-11	080938-2	40	75	125	70	5.1	
WAKS 250-12	080939-2	40	95	125	70	6.5	
WAKS 250-13	080940-2	40	115	125	70	7.9	
WAKS 250-20	012498-2	60	55	90	44	4.2	KNCS-N 260
WAKS 250-21	080942-2	60	55	110	60	3.2	KNCS-N 325
WAKS 250-22	080943-2	60	75	90	44	5.7	
WAKS 250-23	080944-2	60	75	110	60	7.0	
WAKS 250-30	012499-2	80	55	90	44	5.8	
WAKS 250-31	080945-2	80	75	110	60	9.7	

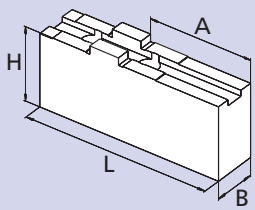

JAWS-CATALOG

Request or download: www.smw-autoblok.de

Fast changeover, fast payback:

The original quick jaw change power chuck

KNCS®-NB LARGE THROUGH HOLE
KNCS®-NBX EXTRA LARGE THROUGH HOLE

>> ALL EXISTING TOP JAWS CAN USED.

Minimal set-up times
Jaw change in less than 1 minute

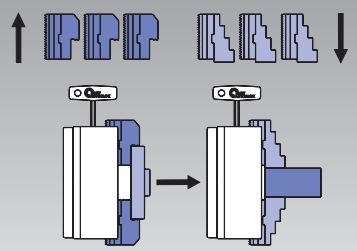

High repeatability when changing jaws
No reboring of already machined jaws necessary, because runout < 0.02 mm (KNCS-NB 210)

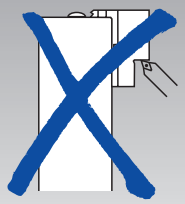

Flexibility jaws can be radially adjusted and are reversible = **less jaw sets**

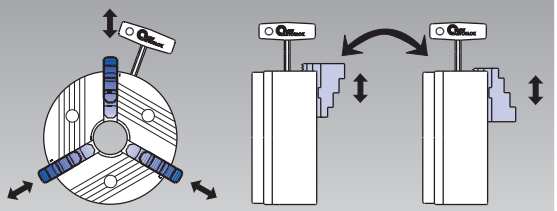

Jaws radially adjustable Jaws 180° reversed

Direct mounting

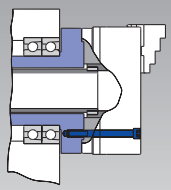

Recess and bolt circle to DIN 55026

Profitability
Example set-up times/costs

	Conventional chuck	KNCS®-NB
Jaw change	10 Min.	1 Min.
Reboring of jaws	20 Min.	0 Min.
Ø jaw changes/day	2	2
Working days/year	230	230
Machine costs/hour	$ 60.–	$ 60.–
Total costs/ year	$ 13 800.–	$ 460.–
Profit*		**$ 13 340.–**

* If jaws are changed more often, the profitability is increased accordingly.

Vertical application

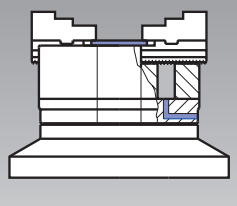

Version for vertical application with cover and drain holes for coolant available.

Extra long, symmetrical and wide jaw guides.
Ideal for O.D. or I.D. gripping

Unique **wedge bar drive for high speed**.
Minimum loss of gripping force because of tangentially supported wedge bars.
Minimum increase of gripping force **(hysteresis)** after quick spindle stop.
High efficiency of the wedge bar drive ensures highest concentricity and **repeatability**.
Suitable for **high-low clamping**

Original SMW-AUTOBLOK quick **jaw change**.
Jaw change accuracy with patented **jaw safety interlock**

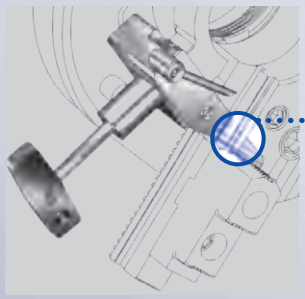

Serration is not fully engaged – jaw safety interlock active.

Less costs by using all existing top jaws from:

- SMW-AUTOBLOK
- Autoblok
- Buck
- Forkardt
- Gamet
- Howa
- Kitagawa
- Logansport
- Mario Pinto
- Matsumoto
- Pratt Burnerd
- Röhm
- Rotomors
- Schunk
- Berg
- Woodworth

If your jaw type is not here, please ask us.

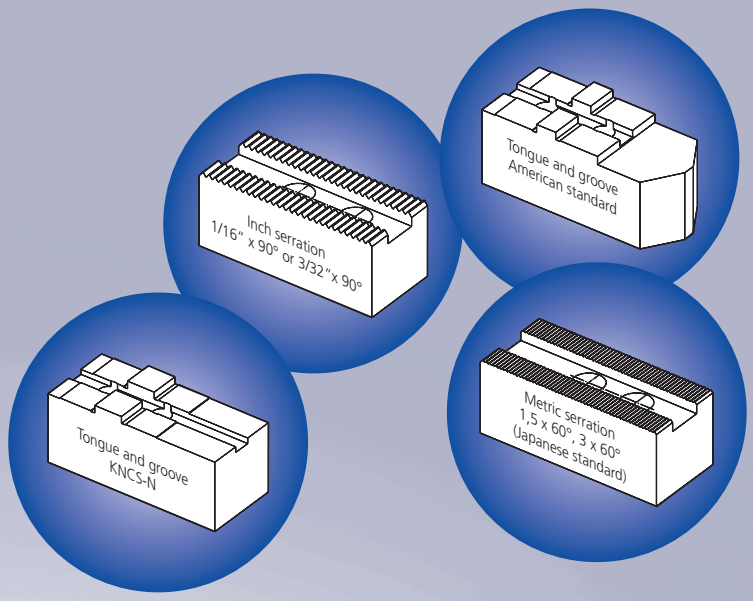

Easy lubrication even on vertical machines with 3 radial built-in grease fittings

Chuck body and internal parts are **case hardened and ground**. For highest rigidity, durability and precision

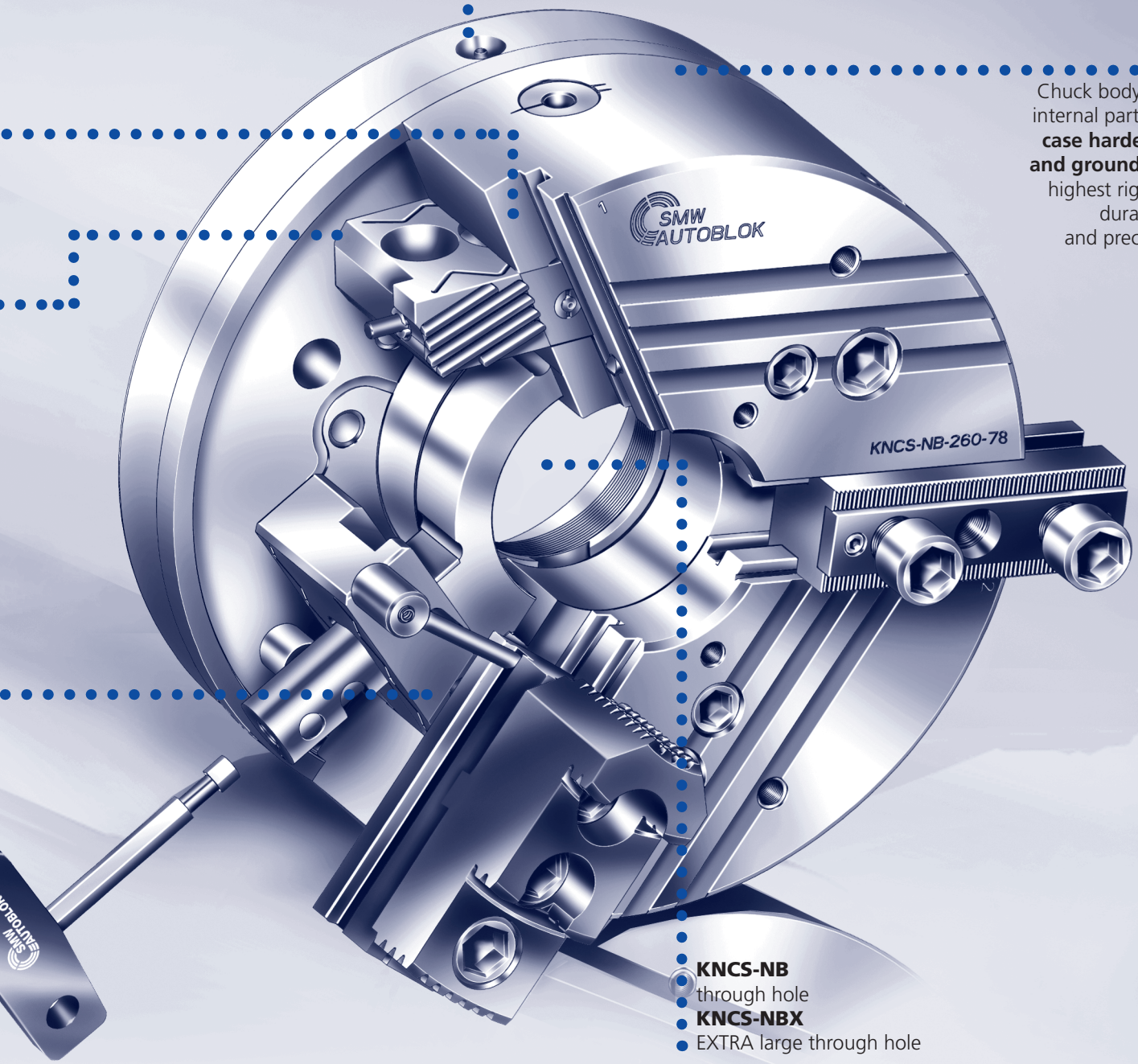

KNCS-NB
through hole
KNCS-NBX
EXTRA large through hole

KNCS®-NB

QUICK JAW CHANGE
Wide master jaws

Main dimensions and technical data

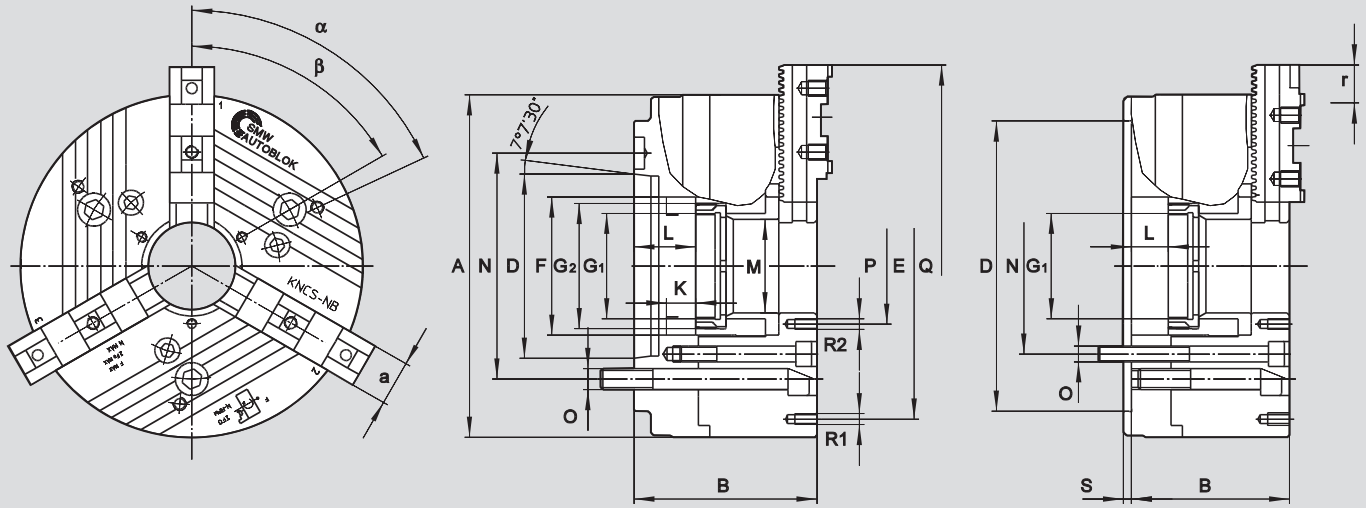

Subject to technical changes.
Dimensions and position of base jaws are depending on top jaw type.
For more detailed information please ask our customer service

SMW-AUTOBLOK Type		KNCS-NB 210-52			KNCS-NB 225-66			KNCS-NB 260-78				KNCS-NB 275-86			KNCS-NB 325-104			
Mounting	**Size**	**Z170**	**A6**	**A8**	**Z170**	**A6**	**A8**	**Z170**	**Z220**	**A6**	**A8**	**Z220**	**A6***	**A8**	**Z220**	**Z300**	**A8**	**A11**
	A	215			225			260				275			324			
	B	105	122	124	105	122	124	120	120	137	139	120	144	139	130	130	149	151
	D H6	170	106.39	139.73	170	106.39	139.73	170	220	106.39	139.73	220	106.39	139.73	220	300	139.73	196.88
	E	168			180			210				210			268			
	F	85			95			111				122			144			
Threaded ring/depth	**G1**	M60 x 1.5/16			M75 x 1.5/16			M90 x 2/20				M95 x 2/20			M115 x 2/22			
Piston thread/depth	**G2**	M75 x 2/19			M85 x 2/19			M102 x 2/23				M110 x 2/23			M132 x 2/25			
Piston stroke	**K**	22			22			25				25			25			
Max.	**L**	25	42	44	25	42	44	28	28	45	47	28	52	47	28	28	47	49
	M	52			66			78				86			104			
Fixing bolt circle	**N**	133.4	133.4	171.4	133.4	133.4	171.4	133.4	171.4	133.4	171.4	171.4	133.4	171.4	171.4	235	171.4	235
Fixing bolt	**O**	M12	M12	M16	M12	M12	M16	M12	M16	M12	M16	M16	M12	M16	M16	M20	M16	M20
	P	72			82			95				105			130			
	Q	261			271			318				322			376			
Thread/thread depth	**R1**	M10/12			M10/12			M10/12				M10/18			M10/12			
Thread/thread depth	**R2**	M6/10			M6/10			M8/14				M8/14			M10/12			
	S	6			6			6				6			6			
	a	28			28			35				35			50			
Base jaw tooth pitch	**-**	4.7			4.7			5.5				5.5			5.5			
Base jaw offset	**r**	28.3			33			33				38.5			49.5			
Base jaw offset	teeth	6			7			6				7			9			
α	deg.	60			60			60				60			60			
β	deg.	60			60			60				60			60			
Stroke per jaw at piston stroke **K** max.	mm	6.0		22	6.0		22	7.0			25	7.0		25	7.0			25
Max. actuating force 3-jaw chuck	kN	53			53			70				70			95			
Max. total gripping force 3-jaw chuck	kN	100			100			135				135			180			
Max. speed 3-jaw chuck	r.p.m.	5000			5000			4000				4000			3300			
Weight without jaws	kg	24	26	26	26	29	29	40	40	43	43	48	53	50.7	65	65	68	68
Moment of inertia	kg·m²	0.11			0.21			0.38				0.41			0.85			
Rec. closed center cylinder	Type	**SIN-S 125/150**			**SIN-S 125/150**			**SIN-S 150/175**				**SIN-S 150/175**			**SIN-S 150/175/200**			
Rec. open center cylinder	Type	**VNK-T2 130-52**			**VNK-T2 150-67**			**VNK-T2 170-77**				**VNK-T2 225-95**			**VNK-T2 250-110**			

* Indirect mounting by reducing flange

For highest speeds: flat gripping force curve

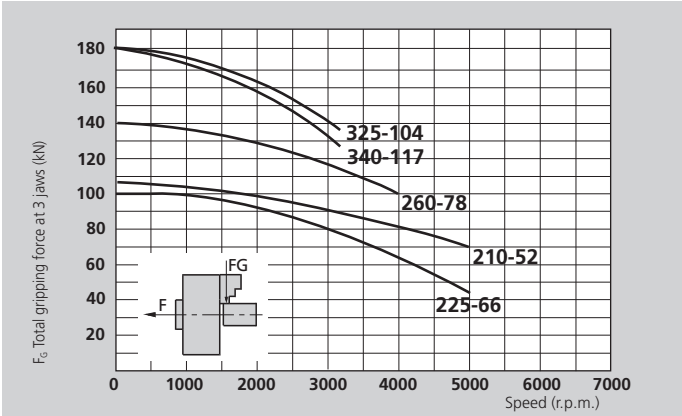

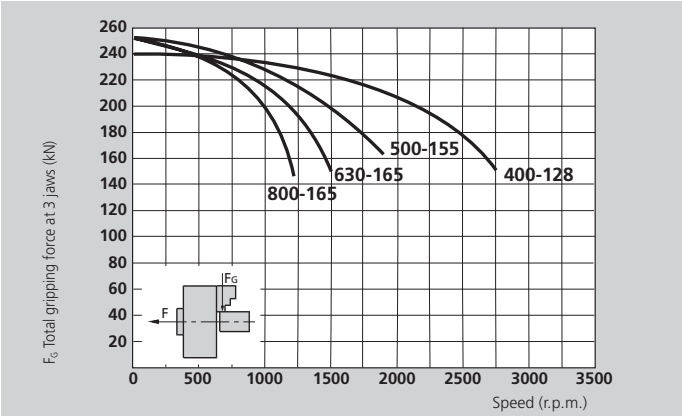

The data in the diagrams refer to 3-jaw-chucks, newly maintained according to their service manuals using SMW-AUTOBLOK K05 grease. The static and dynamic gripping forces have been measured using standard soft top jaws, placed in a position not exceeding the outer diameter of the chuck.

⚠ **Safety advice/danger of damage:**
When using taller/heavier jaws and/or clamping on a bigger diameter reduce draw pull/rotating speed accordingly.

SMW-AUTOBLOK Type		KNCS-NB340-117			KNCS-NB 400-128				KNCS-NB 500-155				KNCS-NB 630-165			KNCS-NB 800-165		
Mounting	**Size**	**Z300**	**A8***	**A11**	**Z300**	**Z380**	**A11**	**A15**	**Z300**	**Z380**	**A11**	**A15**	**Z380**	**A11***	**A15**	**Z520**	**A15***	**A20**
	A	340			400				500				630			800		
	B	130	160	151	140	140	161	163	174	174	195	197	174	214	197	174	214	199
	DH6	300	139.73	196.88	300	380	196.88	285.77	300	380	196.88	285.77	380	196.88	285.77	520	285.77	412.8
	E	270			330				420				420/585			420/585/750		
	F	160			180				207				217			217		
Threaded ring/depth	**G1**	M125 x 2/22			M138 x 2/22				M165 x 2/25				M175 x 2/25			M175 x 2/25		
Piston thread/depth	**G2**	M146 x 2/25			M160 x 2/25				M185 x 2/28				M195 x 2/28			M195 x /2/28		
Piston stroke	**K**	25			32				42				42			42		
Max.	**L**	28	58	49	32	32	53	55	42	42	63	65	42	82	65	42	82	67
	M	117			128				155				165			165		
Fixing bolt circle	**N**	235	171.4	235	235	330.2	235	330.2	235	330.2	235	330.2	330.2	235*	330.2	463.6	330.2*	463.6
Fixing bolt	**O**	M20	M16	M20	M20	M24	M20	M24	M20	M24	M20	M24	M24	M20*	M24	M24	M24*	M24
	P	140			152				180				195			195		
	Q	380			455				554				650			817		
Thread/thread depth	**R1**	M10/16			M12/18				M16/25				M16/25			M16/25		
Thread/thread depth	**R2**	M10/16			M12/18				M12/18				M12/18			M12/18		
	S	6			8				8				8			8		
	a	50			50				62				75			75		
Base jaw tooth pitch	**-**	5.5			5.5				7				7			7		
Base jaw offset	**r**	49.5			60.5				77				91			91		
Base jaw offset	teeth	9			11				11				13			13		
α	deg.	60/35			60/35				20/9x40				20/9x40			20/9x40		
β	deg.	60/35			60/35				20/9x40				20/9x40			20/9x40		
Stroke per jaw at piston stroke **K** max.	mm	7.0		25	8.0			32	10.0			42	10.0		42	10.0		42
Max. actuating force 3-jaw chuck	kN	95			115				120				120			120		
Max. total gripping force 3-jaw chuck	kN	180			240				250				250			250		
Max. speed 3-jaw chuck	r.p.m.	3300			2750				1800				1500			1200		
Weight without jaws	kg	77	88.5	82.5	111	111	116	116	225	225	231	231	390	411	398	620	660	635
Moment of inertia	kg·m²	1.24			2.5				6.5				18			27		
Rec. closed center cylinder	Type	**SIN-S 150/175/200**			**SIN-S 175/200**				**SIN-S 175/200**				**SIN-S 175/200**			**SIN-S 175/200**		
Rec. open center cylinder	Type	**VNK-T2 320-127**			**VNK-T2 320-127**				**VSG 450-165**				**VSG 450-165**			**VSG 450-165**		

* Indirect mounting by reducing flange

JAWS-CATALOG
Request or download: www.smw-autoblok.de

SMW-AUTOBLOK 394

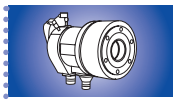
SMW-AUTOBLOK 259

SMW-AUTOBLOK 128

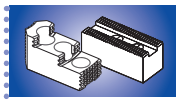
SMW-AUTOBLOK 396

KNCS®-NB

QUICK JAW CHANGE
Wide master jaws

Ordering review

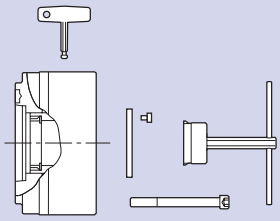

Size / Spindle mounting	KNCS-NB 210-52	KNCS-NB 225-66	KNCS-NB 260-78	KNCS-NB 275-86	KNCS-NB 325-104	KNCS-NB 340-117	KNCS-NB 400-128	KNCS-NB 500-155	KNCS-NB 630-165	KNCS-NB 800-165
Centering rim small			Z170 064645		Z220 064695		Z300 064303	Z300 064306		
Centering rim large	Z170 064334	Z170 069790	Z220 064646	Z220 069660	Z300 064715	Z300 069665	Z380 063950	Z380 064307	Z380 064548	Z520 064579
A 05										
A 06	064610	069791	064669	069661						
A 08	064611	069792	064670	069662	064716	069666				
A 11					064723	069667	064304	064308	064577	
A 15							064305	064309	064549	064615
A 20										064616

Supply range
Chuck + disengaging key + mounting bolts + mounting key + 1 set of coverplates
without base jaws, without top jaws

Base jaw type

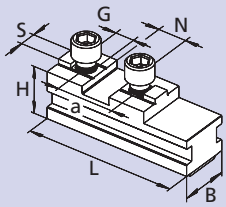

GBK-B

TONGUE & GROOVE KNCS-N standard

KNCS-NB	210-52/225-66	260-78/275-86	325-104/340-117	400-128	500-155	630-165	800-165
Id. No.	138494	039624	039626	039629	035565	035902	064604
B	28	35	50	50	62	75	75
H	32	40	45.8	45.8	57	57	57
L	85	104	115	125	160	200	287
N	20	20	20	26	30	30	30 (2x)
S	10	12	12	12	18	18	18
G (metric)	M8	M12	M12	M12	M16	M16	M16
a	40	40	40	54	60	60	2 x 60

Existing top jaw

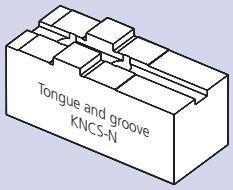

Base jaw type

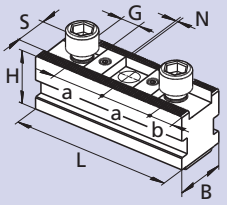

GBK-BD

INCH SERRATED (for SMW-AUTOBLOK standard jaws)

KNCS-NB	210-52/225-66	260-78/275-86	325-104/340-117	400-128	500-155	630-165	800-165
Id. No.	036292	035704	036167	036293	036294	036295	036296
B	28	35	50	50	62	75	75
H	32	40	45.8	45.8	61	61	61
L	85	104	115	125	160	200	287
N	1/16" x 90°	1/16" x 90°	1/16" x 90°	3/32" x 90°	3/32" x 90°	3/32" x 90°	3/32" x 90°
S (ridge)	17	21	21	25.5	25.5	25.5	25.5
G	M12	M16	M16	M20	M20	M20	M20
a	2 x 23	30/28*	30/28*	2 x 38	38/49/38	38/38/52/38	3x38/60.7/2x38
b	11	14	14	17	17	18	17.5

Existing top jaw

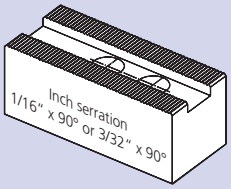

* 30/30 on request

Base jaw type

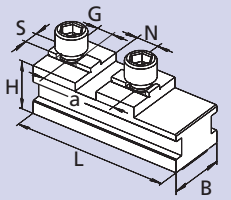

GBK-BA

TONGUE & GROOVE American standard

KNCS-NB	210-52/225-66	260-78/275-86	325-104/340-117	400-128	500-155	630-165	800-165
Id. No.	-	-	039628	039631	060561	060562	064590
B	-	-	50	50	62	75	75
H	-	-	45.8	45.8	57	57	57
L	-	-	120	146	168	203	287
N	-	-	19.02	19.02	19.02	19.02	19.02 (2x)
S	-	-	12.7	12.7	12.7	12.7	12.7
G (inch)	-	-	5/8-11	3/4-10	3/4-10	3/4-10	3/4-10
a	-	-	63.5	76.2	76.2	76.2	2 x 76.2

Existing top jaw

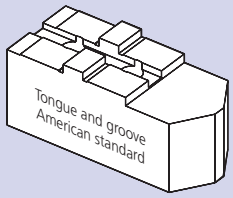

Base jaw type

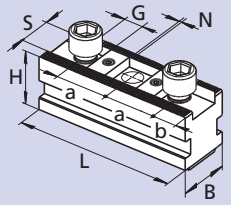

GBK-BM

METRIC SERRATION

KNCS-NB	210-52/225-66	260-78/275-86	325-104/340-117	400-128	500-155	630-165	800-165
Id. No.	035566	035567	035568	035569	035570	035917	036708
B	28	35	50	50	62	75	75
H	32	40	45.8	45.8	61	61	61
L	85	104	115	125	160	200	287
N	1.5 x 60°	1.5 x 60°	1.5 x 60°	1.5 x 60°	3 x 60°	3 x 60°	3 x 60°
S	14	16	21	22	25	25	25
G (metric)	M12	M12	M16	M20	M20	M20	M20
a	2 x 25	2 x 30	2 x 30	2 x 43	50/ 60	60/60/70.5/60	4 x 60
b	11	11	14	17	17	17	17.5

Existing top jaw

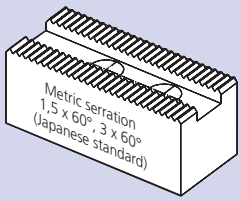

Jaw type

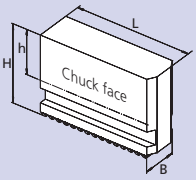

UVB-B

Soft wide monoblock jaws

KNCS-NB	210/225	260/275	325/340	400	500	630/800
Jaw type	UVB-B 210	UVB-B 250	UVB-B 315	UVB-B 400	UVB-B 500	UVB-B 630
Id. No.	534337	238910	238911	238740	238912	5301060
B	28	35	50	50	62	75
H	80	110	115	125	160	160
h	55	81	60	60	105	105
L	85	109.5	120.5	148	175	230
kg/set	4.2	9.4	18.5	20.7	38.8	61.5

JAWS-CATALOG
Request or download: www.smw-autoblok.de

Actuating cylinders with and without through-hole

VNK-T2

Hydraulic open center cylinder with built-in safety valves, piston stroke control and coolant collector (pmax. = 45 bar

SIN-S

Hydraulic closed center cylinder with built-in safety valves and piston stroke control.
Central through-hole for air or coolant (pmax. = 70 bar)

SIN-HL

Hydraulic closed center cylinder for high-low clamping with built-in safety valves and piston stroke control.
Central through-hole for air, oil or coolant (pmax. = 70 bar

SMW-AUTOBLOK Type		VNK-T2 130/52	VNK-T2 170/77	VNK-T2 225/95	VNK-T2 320/127	VSG 450/165	SIN-S 125	SIN-S 150	SIN-S 175	SIN-S 200	SIN-HL 100	SIN-HL 125	SIN-HL 150	SIN-HL 175
Draw pull max.	kN	58	76	100	123	138	71	108	150	196	49	77	108	154
$n_{max.}$	r.p.m.	6300	5000	4000	3200	2000	6000	6000	5000	4000	7000	6000	6000	5000
Through-hole	mm	52.5	77	95.5	127.5	165	-	-	-	-	-	-	-	-

For more technical information see general catalog page 259

Examples for assembly

Open center with VNK-T2

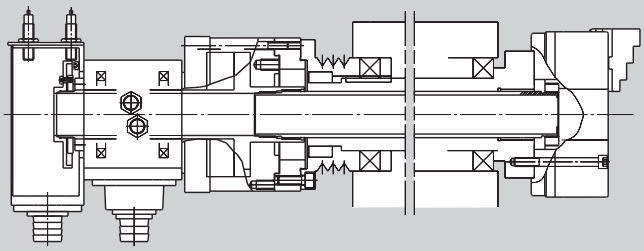

Partial open center with SIN-S/SIN-HL

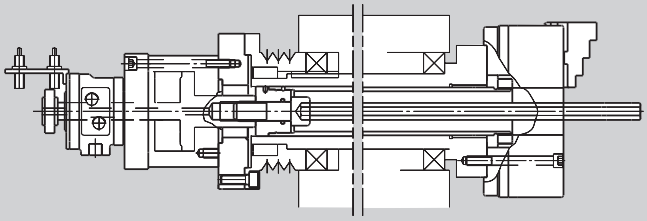

High-low clamping for thin-walled components

Principle

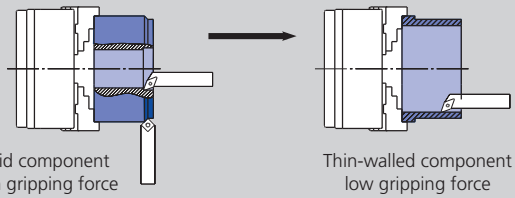

For easily deformed components SMW-AUTOBLOK offers "high-low" clamping.

The gripping force of the chuck can be reduced from a large amount of gripping force used in roughing, to a smaller amount of gripping force for a finishing cut without unclamping the component.

The SMW-AUTOBLOK closed center cylinder type SIN-HL and a modification of the machine hydraulic are necessary.

Function

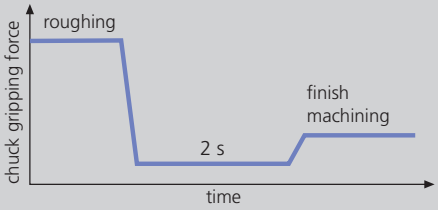

In combination with a SMW-AUTOBLOK "high-low" hydraulic cylinder SIN-HL and suitable machine hydraulics, the KNCS-NB/ KNCS-NBX wedge bar system allows a monitored reduction of gripping force.

The component remains clamped in the chuck, however, the stress of the component can be released.
The "high-low" cycle is programmable and is finished completely within 2 - 4 sec.

Result

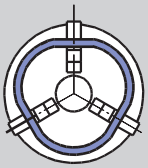

Without "high-low" clamping

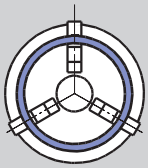

With "high-low" clamping

The result are round components with a minimum of deformation.

For additional information please ask our engineers.

KNCS®-NBX

QUICK JAW CHANGE
Wide master jaws

- **Main dimensions and technical data**
- **EXTRA large through hole**

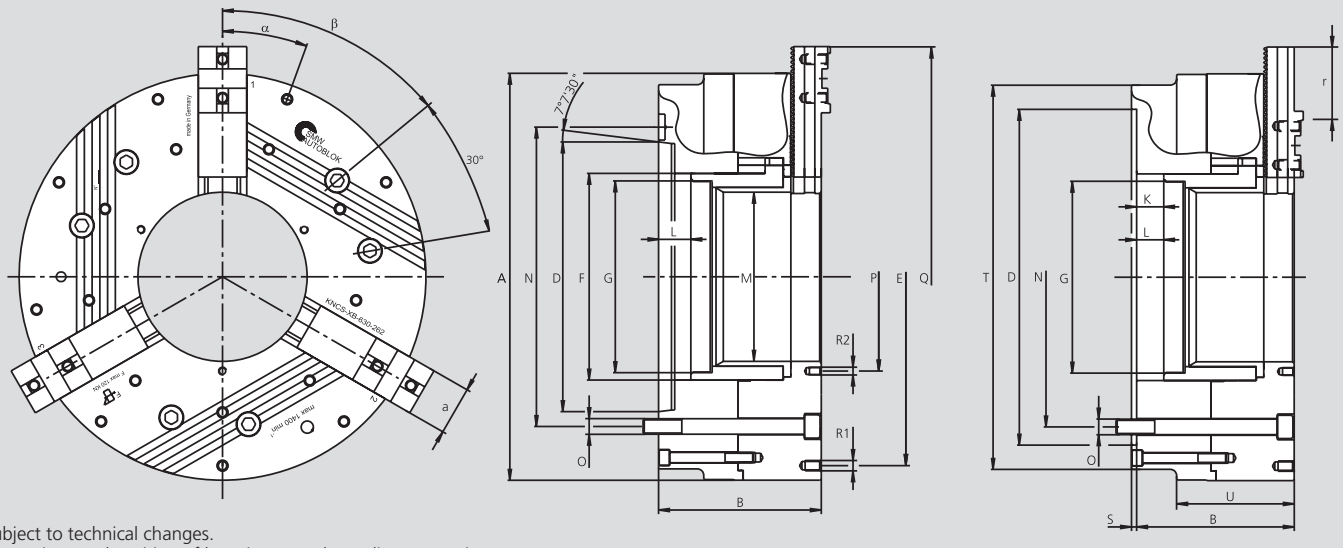

Subject to technical changes.
Dimensions and position of base jaws are depending on top jaw type.
For more detailed information please ask our customer service.

SMW-AUTOBLOK Type		KNCS-NBX 425-170			KNCS-NBX 530-210			KNCS-NBX 630-262			KNCS-NBX 800-262			KNCS-NBX 1000-262		
Mounting	**Size**	**Z380**	**A11**	**A15**	**Z380**	**A11**	**A15**	**Z520**	**A15**	**A20**	**Z520**	**A15**	**A20**	**Z520**	**A15***	**A20**
	A	425			530			630			800			1000		
	B	197	237	220	244	284	267	244	284*	269	244	284*	269	244	284*	269
	D H6	380	196.88	285.77	380	196.88	285.77	520	285.77	412.77	520	285.77	412.77	520	285.77	412.77
	E	330.2			420			420/585			420/585/750			420/585/750/915		
	F	222			262			320			320			320		
Piston thread/depth	**G**	M202 x 2/25			M240 x 2/28			M297 x 2/33			M297 x 2/33			M297 x 2/33		
Piston stroke	**K**	32			42			42			42			42		
Max.	**L**	32	72	55	42	82	55	42	82	67	42	82	67	42	82	67
	M	170			210			262			262			262		
Fixing bolt circle	**N**	330.2	235.0	330.2	330.2	235.0	30.2	463.6	330.2*	463.6	463.6	330.2*	463.6	463.6	330.2*	463.6
Fixing bolt	**O**	M24	M20	M24	M24	M20	M24	M24	M24*	M24	M24	M24*	M24	M24	M24*	M24
	P	195			235			292			292			292		
	Q	487			598			745			915			1107		
Thread/thread depth	**R1**	M12/16			M16/25			M16/25			M16/25			M16/25		
Thread/thread depth	**R2**	M12/16			M16/25			M12/18			M12/18			M12/18		
	S	8			8			8			8			8		
	T	412			490			595			600			600		
	U	137			167			182			182			182		
	a	50			62			75			75			75		
Base jaw tooth pitch	**-**	5.5			7			7			7			7		
Base jaw offset	**r**	49.5			70			119			133			133		
Base jaw offset	teeth	9			10			17			19			19		
α	deg.	15°/12x30°			20°/9x40°			20°/9x40°			20°/9x40°			20°/9x40°		
β	deg.	60			60			60			60			60		
Stroke per jaw at piston stroke **K** max.	mm	8		32	10		42	10		42	10		42	10		42
Max. actuating force 3-jaw chuck	kN	115			120			120			120			120		
Max. total gripping force 3-jaw chuck	kN	240			250			250			250			250		
Max. speed 3-jaw chuck	r.p.m.	2500			1500			1400			1000			850		
Weight without jaws	kg	164			320			395			635			985		
Moment of inertia	kg·m²	4.3			13			23			54			125		
Rec. closed center cylinder	Type	**SIN-S 175/200**			**SIN-S 175/200**			**SIN-S 175/200**			**SIN-S 175/200**			**SIN-S 175/200**		
Rec. open center cylinder	Type	**VSG 450-165**			**VSG 550-205**			**VSG 550-205**			**VSG 550-205**			**VSG 550-205**		

* Indirect mounting by reducing flange

JAWS-CATALOG

Request or download: www.smw-autoblok.de

■ Ordering review

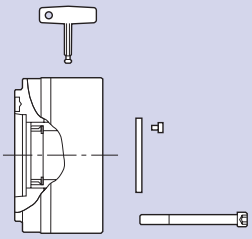

Spindle mounting \ Size	KNCS-NBX 425-170	KNCS-NBX 530-210	KNCS-NBX 630-262	KNCS-NBX 800-262	KNCS-NBX 1000-262
Centering rim	Z380	Z380	Z520	Z520	Z520
large	160080	160090	069760	069770	069780
A 11	160081	160091			
A 15	160082	160092	069768	069778	069788
A 20			069769	069779	069789

Supply range

Chuck + disengaging key + mounting bolts + mounting key + set of coverplates, without base jaws, without top jaws

Base jaw type

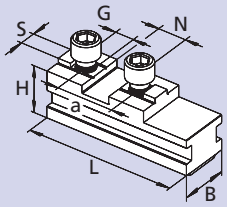

GBK-B

TONGUE & GROOVE KNCS-N standard

KNCS-NBX	425-170	530-210	630-262	800-262	1000-262
Id. No.	039629	035565	035902	064604	069806
B	50	62	75	75	75
H	45.8	57	57	57	57
L	125	160	200	286	384
N	26	30	30	30 (2x)	30
S	12	18	18	18	18
G (metric)	M12	M16	M16	M16	M16
a	54	60	60	2 x 60	60

Existing top jaw

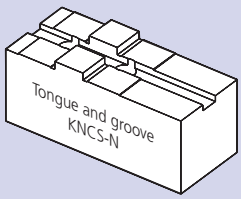

Base jaw type

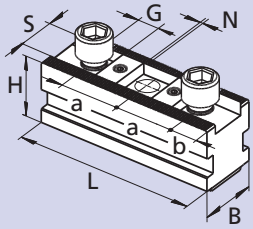

GBK-BD

INCH SERRATED (for SMW-AUTOBLOK standard jaws)

KNCS-NBX	425-170	530-210	630-262	800-262	1000-262
Id. No.	036293	036294	036295	036296	-
B	50	62	75	75	-
H	45.8	61	61	61	-
L	125	160	200	287	-
N	3/32" x 90°	3/32" x 90°	3/32" x 90°	3/32" x 90°	-
S (ridge)	25.5	25.5	25.5	25.5	-
G	M20	M20	M20	M20	-
a	2 x 38	38/49/38	38/38/52/38	3 x 38/60.7/2 x 38	-
b	17	17	18	17.5	-

Existing top jaw

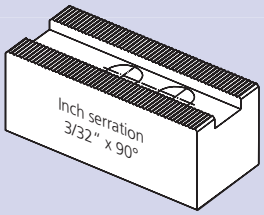

Base jaw type

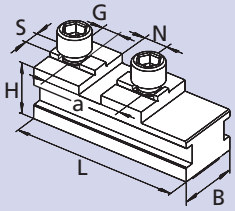

GBK-BA

TONGUE & GROOVE American standard

KNCS-NBX	425-170	530-210	630-262	800-262	1000-262
Id. No.	039631	060561	060562	064590	069807
B	50	62	75	75	75
H	45.8	57	57	57	57
L	146	168	203	286	384
N	19.02	19.02	19.02	19.02/ (2x)	19.02/ (3x)
S	12.7	12.7	12.7	12.7	12.7
G (inch)	3/4-10	3/4-10	3/4-10	3/4-10	3/4-10/ (4x)
a	76.2	76.2	76.2	2 x 76.2	76.2/ (3x)

Existing top jaw

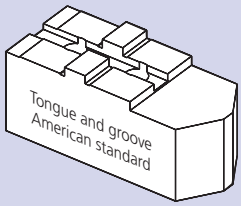

Base jaw type

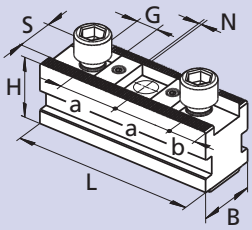

GBK-BM

METRIC SERRATION

KNCS-NBX	425-170	530-210	630-262	800-262	1000-262
Id. No.	035569	035570	035917	036708	-
B	50	62	75	75	-
H	45.8	61	61	61	-
L	125	160	200	287	-
N	1.5 x 60°	3 x 60°	3 x 60°	3 x 60°	-
S	22	25	25	25	-
G (metric)	M20	M20	M20	M20	-
a	2 x 43	50/60	60/60/70.5/60	4 x 60	-
b	17	17	17	17.5	-

Existing top jaw

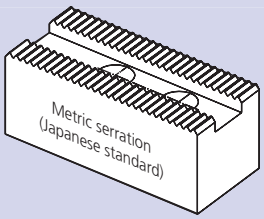

Jaw type

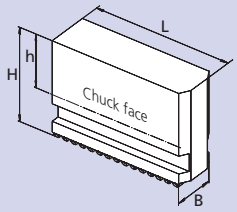

UVB-B

Soft wide monoblock jaws

KNCS-NBX	425	530	630/800/1000
Jaw type	UVB-B 400	UVB-B 500	UVB-B 630
Id. No.	238740	238912	5301060
B	50	62	75
H	125	160	160
h	60	105	105
L	148	175	230
kg/set	20.7	38.8	61.5

JAWS-CATALOG
Request or download:
www.smw-autoblok.de

NEW GENERATION

The most flexible production chuck in the world

KNCS-2G

Customer Benefits

	KNCS-N	KNCS-2G
Minimized set up times due to the quick jaw change system	■	■
Highest accuracy of the jaw change	■	■
Universal	■	■
Vertical mounting of chuck possible	■	■
Case hardened parts	■	■
Wedge bar drive	■	■
Jaw safety interlock	■	■
Sealed wedge bars and base jaws		■
Optimized lubrication in the jaw guides		■
Low maintenance		■

Economic and Efficiency

Example: Maintenance costs at high accumulation of dirt / coolant

		KNCS-N	KNCS-2G
Lubrication interval		every shift	every 3rd shift
Required time for lubricating		10 Min.	10 Min.
Working days/year		230	230
Required time/year		2.300 Min.	767 Min.
Machine costs/hour		€ 60.–	€ 60.–
Total costs/year		€ 2.300.–	€ 767.–
Profit/year	**at 1-shift operation**		**€ 1.533.–**
	at 2-shift operation		**€ 3.066.–**
	at 3-shift operation		**€ 4.599.–**

Clamping glossary

KNCS-2G: Evolution of the quick jaw change power chuck KNCS-N. The KNCS-2G features additional seals and an improved lubrication system for low maintenance. **The chuck still offers all the advantages same as the KNCS-N.** The proven wedge bar drive guarantees unmatched accuracy and rigidity. A low loss of grip force due to centrifugal force makes the chuck ideal for high speed applications. This design does not require any counterbalance weights which allows highest speeds without vibration.

Sealing: The KNCS-2G is sealed by seals attached to both faces of the base jaws. Also the wedge bars are protected by mechanical seals. The seals protect the chuck against **penetration of dirt and swarf.**

Low Maintenance: The lubrication system of the KNCS-2G is optimized. Additional lubrication channels and grease pockets integrated in the jaw guide ways ensure constant clamping force. The lubrication intervals are significantly longer reducing down times and cost for maintenance.

Mass production: The sealing and the new lubrication system make the KNCS-2G also suitable for mass production.

Compatibility: The KNCS-2G is interchangeable with the standard series of quick jaw change chucks KNCS-N. Existing master jaws still can be used without sealing.
A small modification made to the master jaws and a **mounting kit** can upgrade existing master jaws to become 2G master jaws.

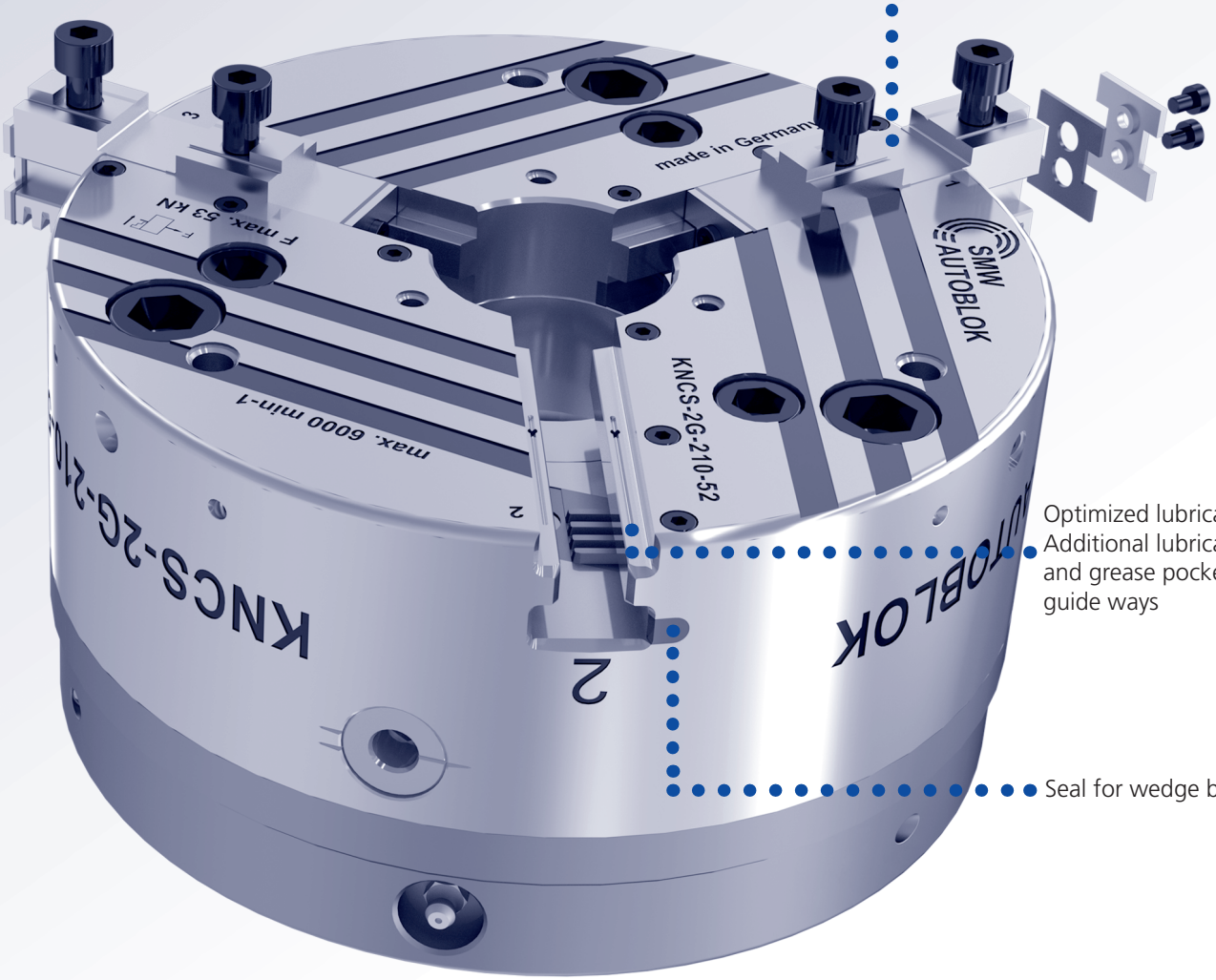

Reversible base jaws GBK-2G with seals and cover on both sides

Optimized lubrication system: Additional lubrication channels and grease pockets in the jaw guide ways

Seal for wedge bar

KNCS-2G

QUICK JAW CHANGE

Sealed, low maintenance and flexible

- Sealed
- Quick jaw change

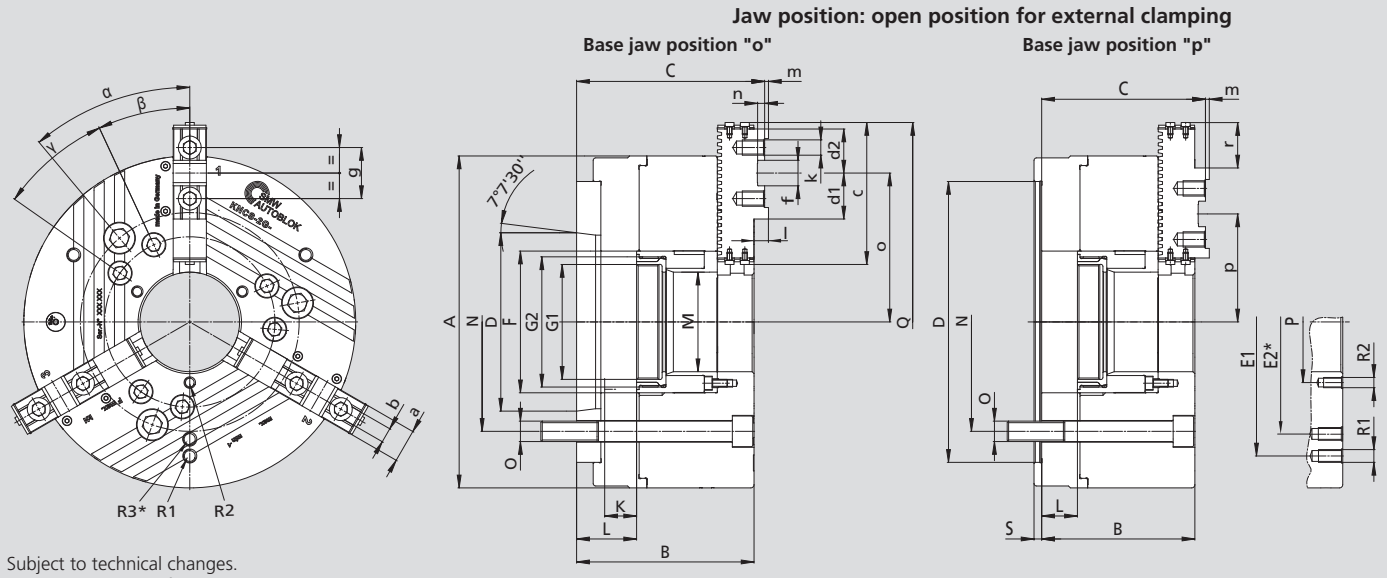

Subject to technical changes.
For more detailed information please ask our customer service.

* only KNCS-2G-630

Type KNCS-2G		170-43			210-52			225-66			260-78			
Mounting	**Size**	**Z140**	**A5**	**A6**	**Z170**	**A6**	**A8**	**Z170**	**A6**	**A8**	**Z170**	**Z220**	**A6**	**A8**
	A		175			215			225			260		
	B	98	113	115	105	122	124	105	122	124	120	120	137	139
	C	104.9	119.9	121.9	109.9	126.9	128.9	109.9	126.9	128.9	128.3	128.3	145.3	147.3
	D H6	140	82.57	106.39	170	106.39	139.73	170	106.39	139.73	170	220	106.39	139.73
	E1/E2		152			168			180			210		
	F		67			85			95			111		
Rotating ring nut/depth	**G1**		M50 x 1.5 / 18 *			M60 x 1.5 / 16			M75 x 1.5 / 16			M90 x 2 / 20		
Piston thread/depth	**G2**		M60 x 1.5 / 18			M75 x 2 / 19			M85 x 2 / 19			M102 x 2 / 23		
Piston stroke	**K**		20 / 25			22 / 25			22 / 25			25 / 28		
Max.	**L**	25	40	42	25	42	44	25	42	44	28	28	45	47
	M		43			52			66			78		
Fixing bolt circle	**N**	104.8	104.8	133.4	133.4	133.4	171.4	133.4	133.4	171.4	133.4	171.4	133.4	171.4
Fixing bolt	**O**	M10	M10	M12	M12	M12	M16	M12	M12	M16	M12	M16	M12	M16
	P		75			72			82			95		
	Q		203			268			278			313		
Thread/Thread depth	**R1**		M8 / 12			M10 / 12			M10 / 12			M10 / 12		
Thread/Thread depth	**R2**		M5 / 8			M6 / 10			M6 / 10			M8 / 16		
	S		6			6			6			6		
	a		20			22			22			26		
	b f7		8			10			10			12		
	c		73.8			92.2			92.2			111.2		
	d1		28			33			33			36		
	d2		27.25			31.5			31.5			34.5		
	f H7		18			20			20			20		
	g		32			40			40			40		
Thread/Thread depth	**k**		M8 / 13			M8 / 13			M8 / 13			M12 / 15		
	l		6.9			4.9			4.9			8.3		
	m		2.5			2.5			2.5			3		
	n		5			4.5			4.5			5.5		
Max./min.	**o**		69 / 50.2			96.6 / 68.3			102 / 69			116.6 / 83.6		
Max./min.	**p**		60 / 41.2			77.6 / 49.3			83 / 50			84.6 / 51.6		
Base jaw tooth pitch	**-**		4.7			4.7			4.7			5.5		
Base jaw offset	**r**		18.8			28.3			33			33		
Base jaw offset	teeth		4			6			7			6		
α	deg.		53			46			46			40		
β	deg.		39			34			34			25		
γ			-			-			-			30		
Stroke per jaw at piston stroke **K**	mm	5.1		20	6.0		22	6.0		22	7.0			25
Stroke per jaw at piston stroke **K** max.	mm	6.8		25	7.0		25	7.0		25	8.0			28
Max. actuating force 3-jaw chuck	kN		32			53			53			70		
Max. total gripping force 3-jaw chuck	kN		60			100			100			135		
Max. speed 3-jaw chuck	r.p.m.		6300			6000			5500			4700		
Weight without jaws	kg	14	15	15	24	26	26	26	29	29	40	40	43	43
Moment of inertia	kg·m²		0.06			0.11			0.2			0.38		
Rec. closed center cyl.	**Type**	**SIN-S 100 / 125**			**SIN-S 125 / 150**			**SIN-S 125 / 150**			**SIN-S 150 / 175**			
Rec. open center cyl.	**Type**	**VNK-T2 102-46**			**VNK-T2 130-52**			**VNK-T2 150-67**			**VNK-T2 170-77**			

* KNCS-2G-170-43 are available with fixed ring nut only

For highest speeds: flat gripping force curve

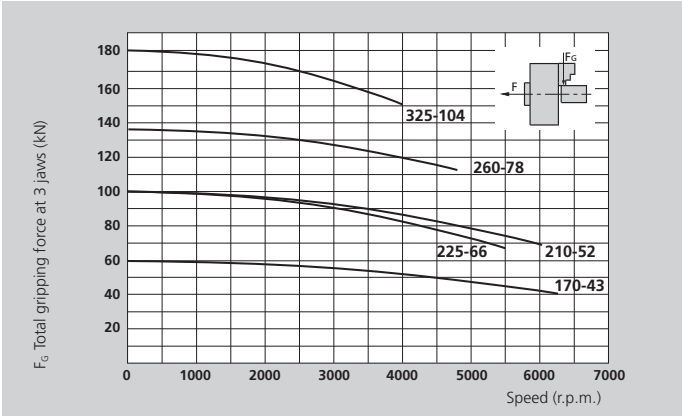

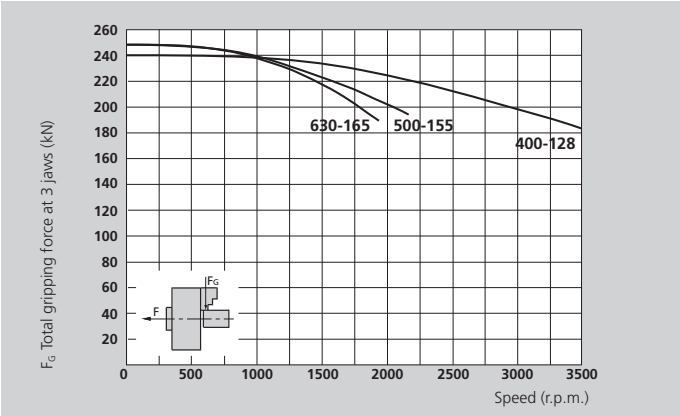

The data in the diagrams refer to 3-jaw-chucks, newly maintained according to their service manuals using SMW-AUTOBLOK K05 grease. The static and dynamic gripping forces have been measured using standard soft top jaws, placed in a position not exceeding the outer diameter of the chuck.

⚠ **Safety advice/danger of damage:**
When using taller/heavier jaws and/or clamping on a bigger diameter reduce draw pull/rotating speed accordingly.

Type KNCS-2G		325-104				400-128				500-155				630-165	
Mounting	**Size**	**Z220**	**Z300**	**A8**	**A11**	**Z300**	**Z380**	**A11**	**A15**	**Z300**	**Z380**	**A11**	**A15**	**Z380**	**A15**
	A	324				400				500				630	
	B	130	130	149	151	140	140	161	163	174	174	195	197	174	197
	C	139.2	139.2	158.2	160.2	149.2	149.2	170.2	172.2	184	184	205	207	184	207
	D H6	220	300	139.73	196.88	300	380	196.88	285.77	300	380	196.88	285.77	380	285.77
	E1/E2	268				330				420				585	420
	F	144				180				207				217	
Rotating ring nut/depth	**G1**	M115 x 2 / 22				M138 x 2 / 22				M165 x 2 / 25				M175 x 2 / 25	
Piston thread/depth	**G2**	M132 x 2 / 25				M160 x 2 / 25				M185 x 2 / 28				M195 x 2 / 28	
Piston stroke	**K**	25/28				32				42				42	
Max.	**L**	28	28	47	49	32	32	53	55	42	42	63	65	42	65
	M	104				128				155				165	
Fixing bolt circle	**N**	171.4	235	171.4	235	235	330.2	235	330.2	235	330.2	235	330.2	330.2	330.2
Fixing bolt	**O**	M16	M20	M16	M20	M20	M24	M20	M24	M20	M24	M20	M24	M24	
	P	130				152				180				195	
	Q	391				461				552				650	
Thread/Thread depth	**R1/R3**	M10 / 16				M12 / 18				M16 / 25				M16 / 25	
Thread/Thread depth	**R2**	M10 / 16				M12 / 18				M12 / 18				M12 / 18	
	S	6				8				8				8	
	a	32				32				45				45	
	b f7	12				12				18				18	
	c	122.2				133.2				167.1				209.7	
	d1	36				43				53				53	
	d2	34				42				48.2				49.75	
	f H7	20				26				30				30	
	g	40				54				60				60	
Thread/Thread depth	**k**	M12 / 17				M12 / 17				M16 / 34				M16 / 34	
	l	9.3				9.3				10				10	
	m	3				3				4				4	
	n	6				7				9				9	
Max./min.	**o**	155.7 / 106.2				182.3 / 121.8				225 / 141				270.5 / 179.5	
Max./min.	**p**	111.7 / 62.2				143.3 / 82.2				164 / 80				170.5 / 79.5	
Base jaw tooth pitch	**-**	5.5				5.5				7				7	
Base jaw offset	**r**	49.5				60.5				84				91	
Base jaw offset	teeth	9				11				12				13	
α	deg.	40				40				40				40	
β	deg.	25				25				25				-	
γ	deg.	30				30				30				-	
Stroke per jaw at piston stroke **K**	mm	7.0			25										
Stroke per jaw at piston stroke **K** max.	mm	8.0			28	8.0			32	10.0			42	10.0	42
Max. actuating force 3-jaw chuck	kN	95				115				120				125	
Max. total gripping force 3-jaw chuck	kN	180				240				250				250	
Max. speed 3-jaw chuck	r.p.m.	4000				3500				2200				1700	
Weight without jaws	kg	65	65	68	68	111	111	116	116	225	225	231	231	390	398
Moment of inertia	kg·m²	1.2				2.5				6.5				18	
Rec. closed center cyl.	**Type**	**SIN-S 150 / 175 / 200**				**SIN-S 175 / 200**				**SIN-S 175 / 200**				**SIN-S 175 / 200**	
Rec. open center cyl.	**Type**	**VNK-T2 250-110**				**VNK-T2 320-127**				**VSG 450-165**				**VSG 450-165**	

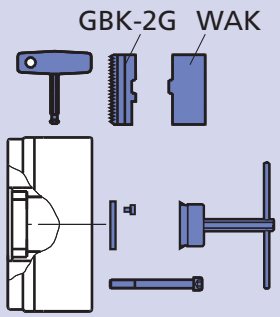

Supply range:

Chuck + key + mounting bolts + mounting key
+ 1 set hardened base jaws type GBK-2G
+ 1 set soft top jaws type WAK
+ 1 set of coverplates

Spindle mounting \ Size	KNCS-2G 170-43	KNCS-2G 210-52	KNCS-2G 225-66	KNCS-2G 260-78	KNCS-2G 325-104	KNCS-2G 400-128	KNCS-2G 500-155	KNCS-2G 630-165
Centering rim small				Z 170 161551	Z 220 161571	Z 300 161591	Z 300 162106	
Centering rim large	Z 140 162400	Z 170 161180	Z 170 161582	Z 220 161550	Z 300 161500	Z 380 161592	Z 380 161980	Z 380 162120
A 05	162401							
A 06	162402	161563	161583	161553				
A 08		161564	161584	161554	161572			
A 11					161573	161593	162107	
A 15						161594	162108	162121

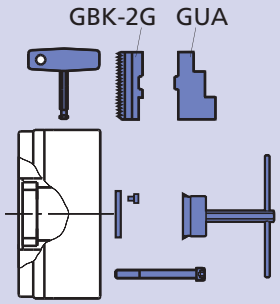

Supply range:

Chuck + key + mounting bolts + mounting key
+ 1 set hardened base jaws type GBK-2G
+ 1 set hardened, reversible top jaws type GUA ground on chuck
+ 1 set of coverplates

Spindle mounting \ Size	KNCS-2G 170-43	KNCS-2G 210-52	KNCS-2G 225-66	KNCS-2G 260-78	KNCS-2G 325-104	KNCS-2G 400-128	KNCS-2G 500-155	KNCS-2G 630-165
Centering rim small				Z 170 161559	Z 220 161578	Z 300 161599	Z 300 162109	
Centering rim large	Z 140 162403	Z 170 161568	Z 170 161588	Z 220 161560	Z 300 161579	Z 380 161600	Z 380 162110	Z 380 162122
A 05	162404							
A 06	162405	161569	161589	161561				
A 08		161570	161590	161562	161580			
A 11					161581	161601	162111	
A 15						161602	162112	162123

■ Base jaws

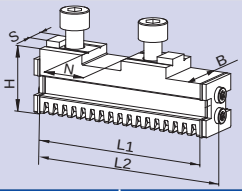

GBK-2G

Hardened base jaws

Consisting of 1 set (3 pcs.) base jaws GBK-2G with seals and mounting screws (6 pcs.) for top jaws.

KNCS-2G	170	210	225	260	325	400	500	630
Jaw type	GBK-2G 170	GBK-2G 200	GBK-2G 200	GBK-2G 250	GBK-2G 315	GBK-2G 400	GBK-2G 500	GBK-2G 630
Id. No.	162390	161520	161520	161540	161329	161605	161843	161846
B	20	22	22	26	32	32	45	45
H	27.5	29.5	29.5	37	43	43	57	57
L1	63.5	82	82	101	112	123	157.5	199.5
L2 *	73.6	92.2	92.2	111.2	122.2	133.2	167.1	209.7
N	20	20	20	20	20	26	30	30
S	10	10	10	12	12	12	18	18
kg/set	0.7	1.0	1.0	1.8	2.7	3.0	7.7	9.5

* Dimension incl. seals, cover and screws

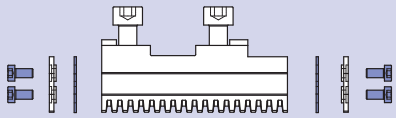

Seal Kit

for hardened base jaws GBK-2G

Consisting of seals (6 pcs.)
and mounting screws (12 pcs.)

KNCS-2G	170	210	225	260	325	400	500	600
Jaw type	GBK-2G 170	GBK-2G 200	GBK-2G 200	GBK-2G 250	GBK-2G 315/400	GBK-2G 315/400	GBK-2G 500	GBK-2G 630
Id. No.	207495	205382	205382	205383	205384	205384	206915	206915

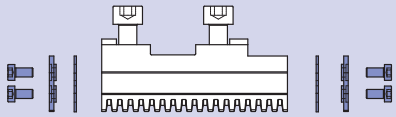

Mounting Kit

for hardened base jaws GBK-2G

Consisting of seals (6 pcs.), covers (6 pcs.)
and mounting screws (12 pcs.)

KNCS-2G	170	210	225	260	325	400	500	630
Jaw type	GBK-2G 170	GBK-2G 200	GBK-2G 200	GBK-2G 250	GBK-2G 315/400	GBK-2G 315/400	GBK-2G 500	GBK-2G 630
Id. No.	207496	205386	205386	205387	205388	205388	206916	206916

Advice: Existing master jaws still can be used without seals. A small modification made to the master jaws and a mounting kit can upgrade existing master jaws to become 2G master jaws (instruction for the rework on request).

Grease K05®

Special grease for manual and power chucks

Cartridge 14 Oz. (DIN 1284)
Grease content 500 g
Id. No. 016440

Can 1000 g
Id. No. 011881

- High adhesion
- High resistance against coolant
- High load bearing capacity
- Low friction coefficient
- High gripping force
- Avoids tribocorrosion

Grease gun

Grease gun (DIN 1283) for cartridges 14 Oz. (DIN 1284)
■ Also refillable from grease can 1000 g.

Lubrication set Id. No. 083726
Supply range
- Grease gun
- 1 Adapter flexible for high pressure grease nipple
- 1 Adapter for cone grease nipple

KNCS-NB-CL

CENTER LINE

High precision power chucks Ø 630

- Quick jaw change
- Large through hole
- Wide master jaws – Radial fine adjustment
- High flexibility: jaws radially adjustable / reversible

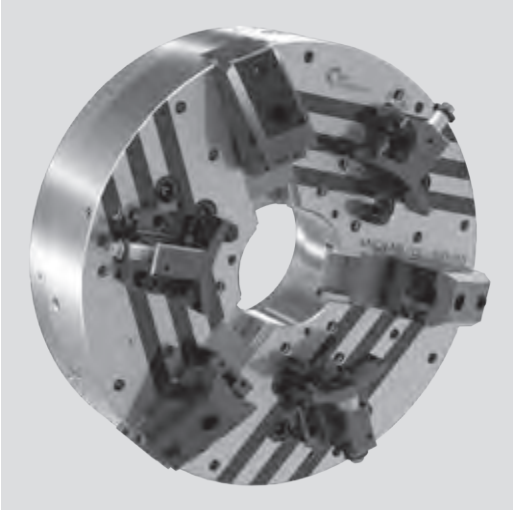

Application/customer benefits

- For workpieces with high concentricity callout
- For radial readjustment of workpieces with big changes in weight during machining
- To apply additional grip force to the workpiece by the adjustment screws
- Readjustment of the centerline of the workpiece in process

Technical features

- Intergrated fine adjustment to center the workpiece
- Fine adjustment is radially displaceable for different workpiece diameters
- Concentricities higher than the repeatability of the chuck can be reached

Standard equipment

3-jaw chuck with disengaging key
Mounting key
Set of coverplates
Fine adjustment

Ordering example

3-jaw chuck KNCS-NB-CL 630

Actual gripping force diagrams

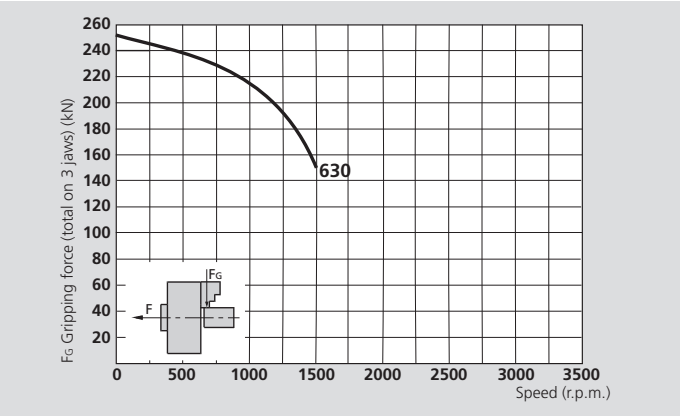

The data in the diagrams refer to 3-jaw-chucks, newly maintained according to their service manuals using SMW-AUTOBLOK K05 grease.The static and dynamic gripping forces have been measured using standard soft top jaws, placed in a position not exceeding the outer diameter of the chuck.

⚠ **Safety advice/danger of damage:**
When using taller/heavier jaws and/or clamping on a bigger diameter reduce draw pull/rotating speed accordingly.

Radial fine adjustment CL

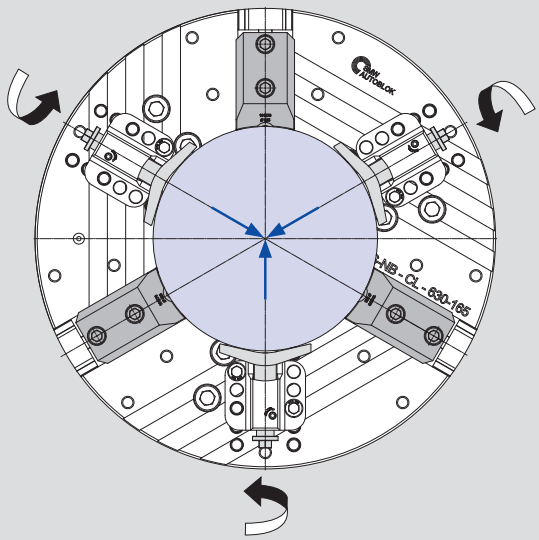

The centerline is affected by changes of weight of the workpiece and the mechanic repeatability of the chuck itself. The center of the workpiece can be fine adjusted even more accurate than the repeatability of the chuck, using the CL fine adjustment. Integrated CL fine adjustment devices allow to bring any workpiece into the exact rotation center of the machine while clamped. This is ideal for high accurate tubine shafts, aerospace parts etc.

Technical data

SMW-AUTOBLOK Type		KNCS-NB-CL 630
Id. No.		**161250**
Number of jaws		**3**
Radial jaw stroke	mm	10
Axial piston stroke	mm	42
Max. draw-pull	kN	120
Max. gripping force	kN	250
Max. speed	r.p.m.	1500
Weight (without top jaws)	kg	390
Moment of inertia	kg·m²	18
Recommended closed center cylinder		**SIN-S 175/200**
Recommended open center cylinder		**VSG 450-165**

High precision power chucks Ø 630

- Quick jaw change
- Large through hole
- Wide master jaws - Radial fine adjustment
- High flexibility: jaws radially adjustable / reversible

KNCS-NB-CL

CENTER LINE

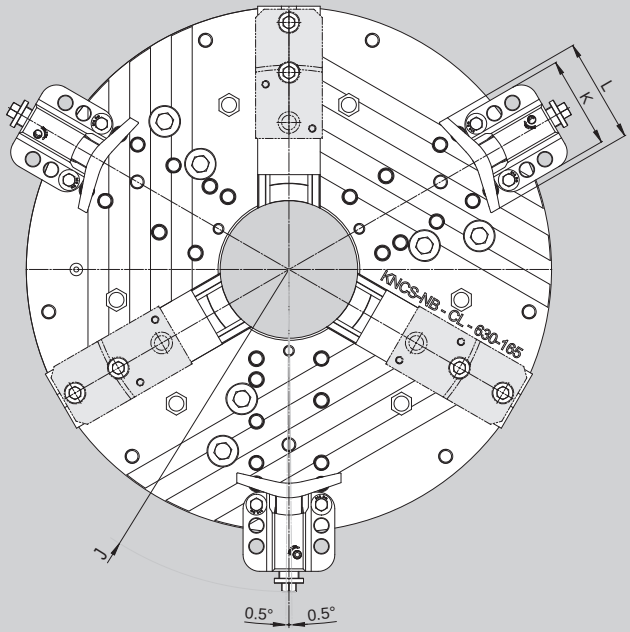

Max. radial swivelling
~±0.5° = ±0.5 mm

Base jaw position „p“

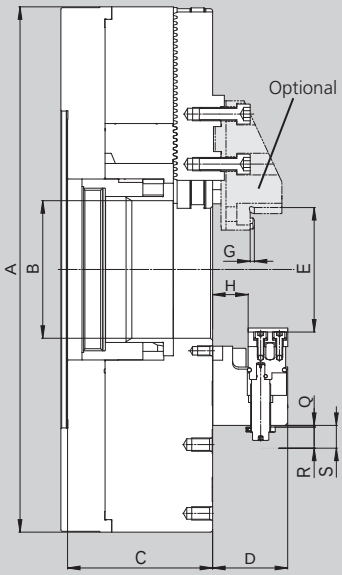

Min. position of adjustment
(CL)

Base jaw position „o“

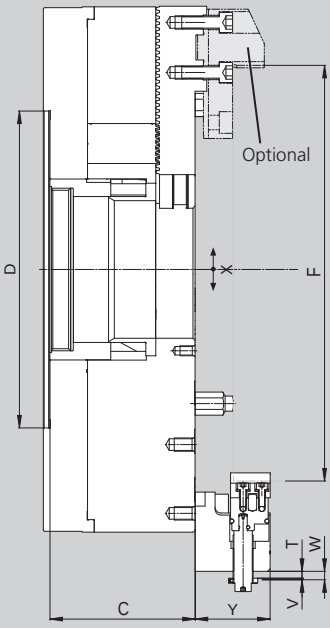

Max. position of adjustment
(CL)

Subject to technical changes.
For more detailed information please ask our customer service or see the technical data of KNCS-NB.

SMW-AUTOBLOK Type			KNCS-NB-CL 630
Id. No.			**161250**
	A	mm	630
Chuck bore	**B**	mm	165
	C	mm	174
	D	mm	380
Min. clamping diameter	**E**	mm	150
Max. clamping diameter	**F**	mm	540
	G	mm	5
	H	mm	42.6
Swing diameter max.	**J**	mm	812
	K	mm	110
	L	mm	125
	M	mm	60
Residual stroke CL (min. position)	**Q**	mm	2
Approach stroke CL (min. position)	**R**	mm	27
Total stroke CL (min. position)	**S**	mm	29
Residual stroke CL (max. position)	**T**	mm	1.8
Approach stroke CL (max. position)	**V**	mm	27.2
Total stroke CL (max. position)	**W**	mm	29
Radial adjustment range CL to the center line	**X**	mm	~ ± 0.05
	Y	mm	90

AP-RC

Quick jaw change
TONGUE & GROOVE

AP-RD

Quick jaw change
SERRATION

Quick jaw change high precision power chucks Ø 170 - 400 mm

- Closed center
- 3 jaws
- proofline® chucks = fully sealed – low maintenance

Application/customer benefits

- For mid to large batch flexible production
- Quick jaw change = short set up time
- Fully sealed, ideal for dry machining of castings and forgings or if high pressure coolant is used
- Ideal for vertical, pick up and horizontal machines

AP-RC: Quick jaw change with TONGUE & GROOVE master jaws
AP-RD: Quick jaw change with SERRATED master jaws (2.5 mm x 60°) (radially adjustable)

Technical features

- High accuracy patented quick jaw change
- Constant gripping force with permanent grease lubrication
- Central bore for coolant and/or air
- Chuck body and internal parts case hardened
- **proofline® chucks =** fully sealed – low maintenance

Standard equipment

3-jaw chuck
1 set soft top jaws (no AP-RC)
1 quick jaw change T wrench
Mounting bolts

Ordering example

3-jaw chuck AP-RC 215/A6
or
3-jaw chuck AP-RD 260/Z220

Actual gripping force diagrams

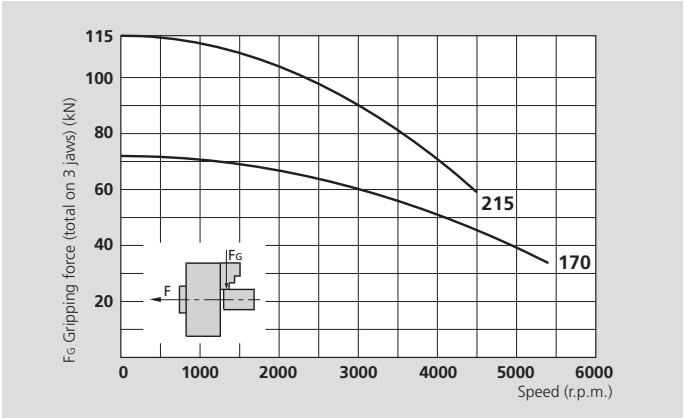

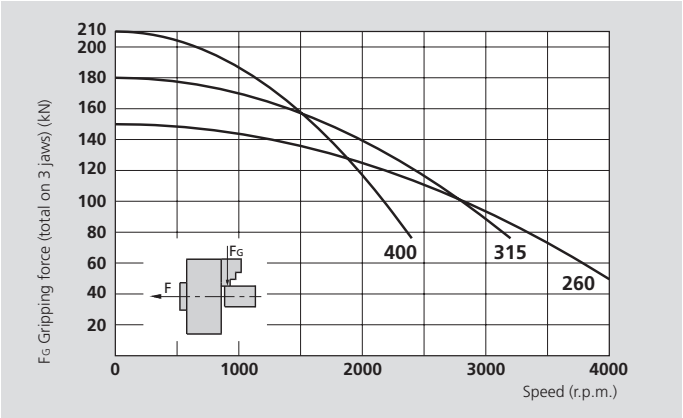

The data in the diagrams refer to 3-jaw-chucks, newly maintained according to their service manuals using SMW-AUTOBLOK K67 grease.The static and dynamic gripping forces have been measured using standard soft top jaws, placed in a position not exceeding the outer diameter of the chuck.

⚠ **Safety advice/danger of damage:**
When using taller/heavier jaws and/or clamping on a bigger diameter reduce draw pull/rotating speed accordingly.

Technical data

SMW-AUTOBLOK Type		AP-RC 170 AP-RD 170	AP-RC 215 AP-RD 215	AP-RC 260 AP-RD 260	AP-RC 315 AP-RD 315	AP-RC 400 AP-RD 400
Number of jaws		**3**	**3**	**3**	**3**	**3**
Radial jaw stroke	mm	3.6	4.6	5	6.3	7
Axial piston stroke	mm	17	22	24	30	33
Max. draw-pull*	kN	30	42	55	65	75
Max. gripping force*	kN	72	112	150	180	210
Max. speed	r.p.m.	5400	4600	4000	3200	2400
Weight (without top jaws)	kg	10	19.5	32.5	56	90
Moment of inertia	kg·m²	0.037	0.113	0.28	0.69	1.7
Recommended actuating cylinders		**SIN-S 100**	**SIN-S 100/125**	**SIN-S 125/150**	**SIN-S 125/150**	**SIN-S 150/175**

* For internal clamping reduce the draw pull by 30 %.

SMW-AUTOBLOK 394

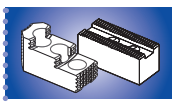
SMW-AUTOBLOK 144

SMW-AUTOBLOK 259

Quick jaw change high precision power chucks Ø 170 - 400 mm

- Closed center
- 3 jaws
- proofline® chucks = fully sealed – low maintenance

AP-RC

Quick jaw change
TONGUE & GROOVE

AP-RD

Quick jaw change
SERRATION

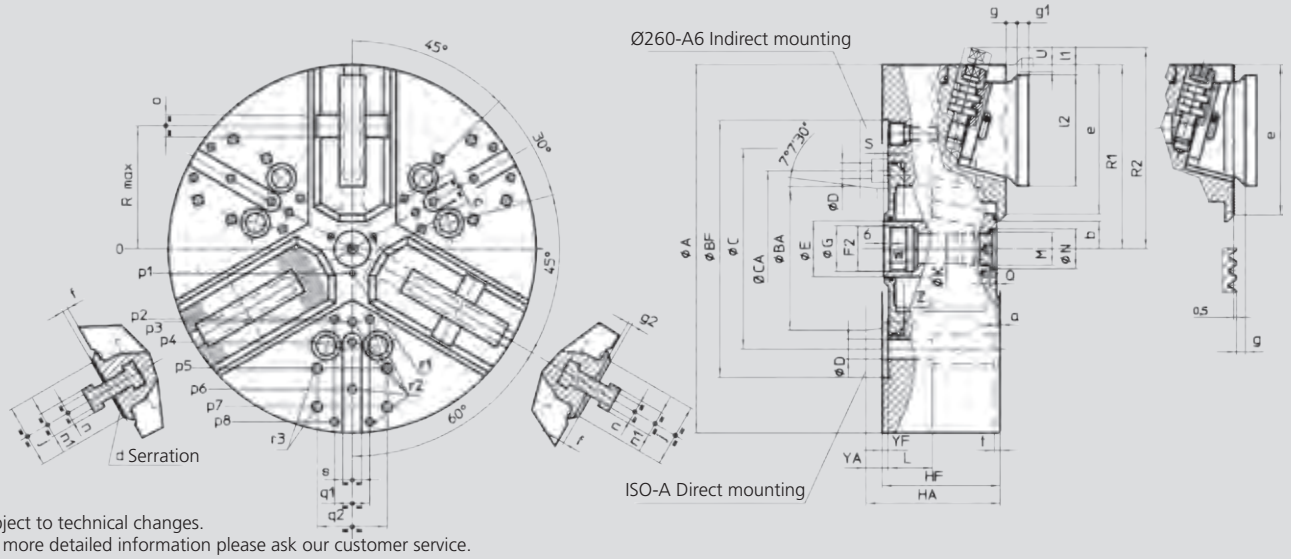

Subject to technical changes.
For more detailed information please ask our customer service.

SMW-AUTOBLOK Type			AP-RC 170 AP-RD 170		AP-RC 215 AP-RD 215		AP-RC 260 AP-RD 260			AP-RC 315 AP-RD 315		AP-RC 400 AP-RD 400	
Mounting			Z140	A5	Z170	A6	Z220	A6	A8	Z220	A8	Z300	A11
	A	mm	172		216		262			315		390	
	BF/BAH6	mm	140	82.563	170	106.375	220	106.375	139.719	220	139.719	300	196.869
	C	mm	104.8		133.4		171.4	-	171.4	171.4		235	
	CA	mm	-	-	-	-	-	133.4	-	-	-	-	-
	D	mm	11.5		13.5		17	13.5	17	17		21	
	E	mm	32		42		48			48		75	
	F2	mm	M24 x 2		M32 x 1.5		M38 x 1.5			M38 x 1.5		M60 x 1.5	
	G H8	mm	25		33		39			39		61	
	HF/HA	mm	68	78	81	93	92	111	106	101	115	112	127
	K	mm	18.5		20		25			25		48	
	L	mm	23		32		38			38		54	
	M	mm	M10 x 1		M22 x 1.5		M28 x 1.5			M28 x 1.5		M52 x 1.5	
	N H9	mm	15		24		34			34		60	
	Q	mm	4.5		5.5		5.5			5.5		9	
Max.	**R**	mm	56		72		88			105		133.5	
Chuck open	**R1**	mm	86.5		108		131			157.5		195	
	R2 *	mm	99		122.5		145.5			172		217.5	
Max./min.	**S**	mm	21/4		26/4		28/4			34/4		37/4	
Radial jaw stroke	**U**	mm	3.6		4.6		5			6.3		7	
	W	mm	22		26		26			26		38	
	YF/YA	mm	5	15	5	17	5	24	19	5	19	6	21
Max./min.	**Z**	mm	17/0		22/0		24/0			30/0		33/0	
	a	mm	3		3		3			3		3	
Min.	**b**	mm	8.5		12		14			16.5		31	
Min.	**c**	mm	9		13		14			16		38	
Serration **AP-RD**	**d**	mm	2.5 x 60°		2.5 x 60°		2.5 x 60°			2.5 x 60°		2.5 x 60°	
	e	mm	68		85		106			128.5		150	
	f	mm	5		5		5			5		7	
	g	mm	7.5		7.5		8.5			9.5		11.5	
	g1	mm	8		8		9			10		12	
	g2	mm	3.5		3.5		3.5			3.5		5.5	
	j	mm	30		38		44			54		63	
	l1	mm	2.5		2.5		9			9		8.5	
	l2	mm	52		66		78			95		118	
	n h8	mm	10		10		12			14		18	
	n1	mm	16		16		19			22		28	
	o H7	mm	12.68		12.68		19.03			19.03		19.03	
	p1	mm	16		16		21			21		37.5	
	p2	mm	-		-		-			60		80	
	p3	mm	38		49		55			62.5		83	
	p4	mm	-		80		70			80		110	
	p5	mm	65		80		102			102		140	
	p6	mm	70		-		102			120		155	
	p7	mm	-		-		-			135		170	
	p8	mm	-		-		-			-		170	
	q1	mm	-		-		-			30		36	
	q2	mm	36		45		60			60		80	
	r1	mm	M5/7		M5/8		M6/10			M6/10		M6/12	
	r2	mm	M6/14		M8/17		M8/17			M8/17		M10/19	
	r3	mm	M8/17		M8/17		M10/19			M10/19		M12/22	
	s	mm	16		16		16			16		20	
	t	mm	5		5		5			5		5	

* Quick jaw change position

NT-RC

Quick jaw change
TONGUE & GROOVE

NT-RD

Quick jaw change
SERRATION

Quick jaw change high precision power chucks Ø 170 - 400 mm

- Centrifugal force compensation
- 3 jaws, closed center
- proofline® chucks = fully sealed – low maintenance

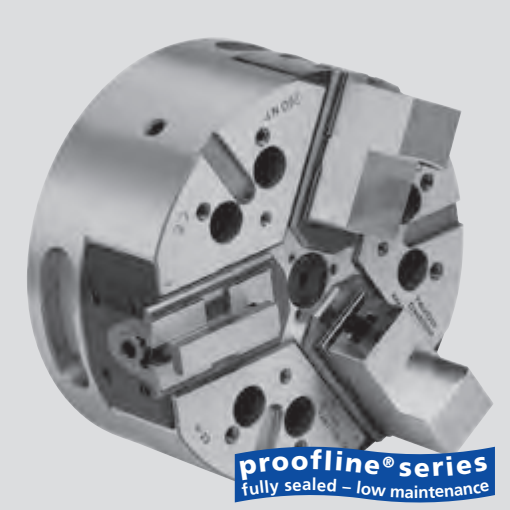

Application/customer benefits

- For mid to large batches flexible production/high speed machining and for fragile parts
- Quick jaw change = short set up time
- Fully sealed, ideal for dry machining of castings and forgings or if high pressure coolant is used
- Ideal for vertical, pick up and horizontal machines

NT-RC: Quick jaw change with TONGUE & GROOVE master jaws
NT-RD: Quick jaw change with serrated master jaws (2.5 mm x 60°) (radially adjustable)

Technical features

- High accuracy patented quick jaw change
- Centrifugal force compensation
- Constant gripping force with permanent grease lubrication
- Central bore for coolant and/or air
- Chuck body and internal parts case hardened
- **proofline® chucks =** fully sealed – low maintenance

Standard equipment

3-jaw chuck
1 set soft top jaws
1 quick jaw change wrench
Mounting bolts

Ordering example

3-jaw chuck NT-RC 215/A6
or
3-jaw chuck NT-RD 260/Z220

Actual gripping force diagrams

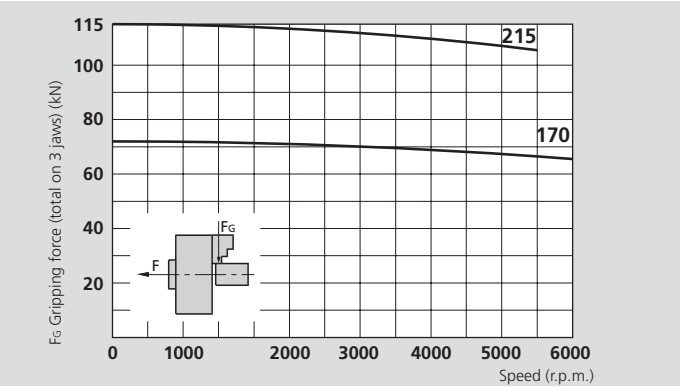

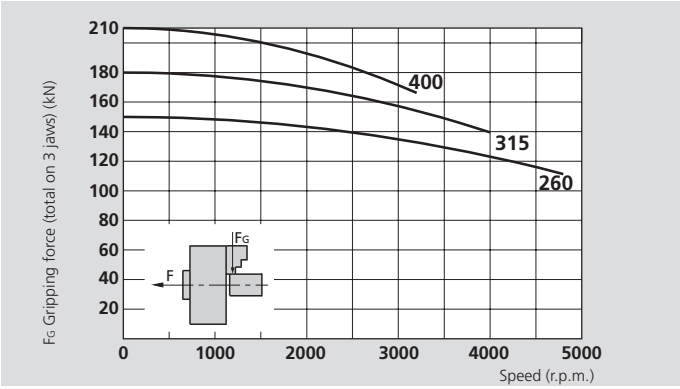

The data in the diagrams refer to 3-jaw-chucks, newly maintained according to their service manuals using SMW-AUTOBLOK K67 grease. The static and dynamic gripping forces have been measured using standard soft top jaws, placed in a position not exceeding the outer diameter of the chuck.

⚠ **Safety advice/danger of damage:**
When using taller/heavier jaws and/or clamping on a bigger diameter reduce draw pull/rotating speed accordingly.

Technical data

SMW-AUTOBLOK Type		NT-RD 170 NT-RC 170	NT-RD 215 NT-RC 215	NT-RD 260 NT-RC 260	NT-RD 315 NT-RC 315	NT-RD 400 NT-RC 400
Number of jaws		**3**	**3**	**3**	**3**	**3**
Radial jaw stroke	mm	3.6	4.6	5	6.3	7
Axial piston stroke	mm	17	22	24	30	33
Max. draw-pull*	kN	30	42	55	65	75
Max. gripping force*	kN	72	112	150	180	210
Max. speed	r.p.m.	6500	6000	4800	4000	3200
Weight (without top jaws)	kg	13	25	40	68	112
Moment of inertia	kg·m²	0.048	0.146	0.34	0.84	2.15
Recommended actuating cylinders		**SIN-S 100**	**SIN-S 100/125**	**SIN-S 125/150**	**SIN-S 125/150**	**SIN-S 150/175**

* For internal clamping reduce the draw pull by 30 %.

SMW-AUTOBLOK 394

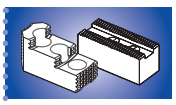
SMW-AUTOBLOK 144

SMW-AUTOBLOK 259

Quick jaw change high precision power chucks Ø 170 - 400 mm

- Centrifugal force compensation
- 3 jaws, closed center
- proofline® chucks = fully sealed – low maintenance

NT-RC

Quick jaw change
TONGUE & GROOVE

NT-RD

Quick jaw change
SERRATION

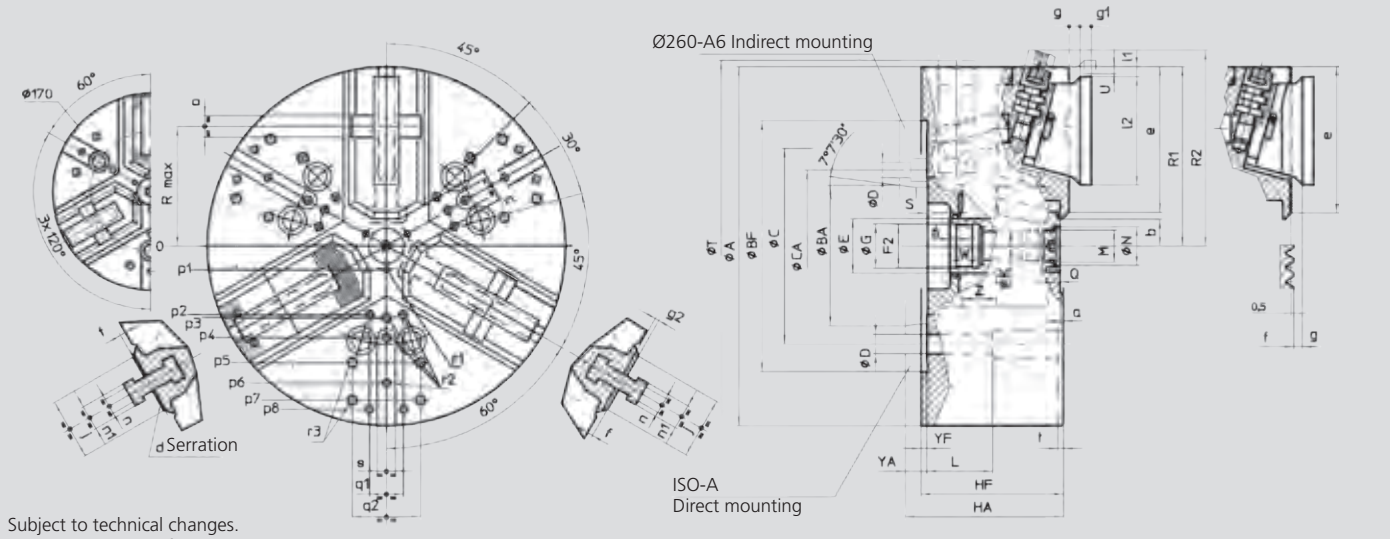

Subject to technical changes.
For more detailed information please ask our customer service.

SMW-AUTOBLOK Type			NT-RD 170 NT-RC 170		NT-RD 215 NT-RC 215		NT-RD 260 NT-RC 260			NT-RD 315 NT-RC 315		NT-RD 400 NT-RC 400	
Mounting			Z140	A5	Z170	A6	Z220	A6	A8	Z220	A8	Z300	A11
	A	mm	172		216		262			315		390	
	BF/BAH6	mm	140	82.563	170	106.375	220	106.375	139.719	220	139.719	300	196.869
	C	mm	104.8		133.4		171.4	-	171.4	171.4		235	
	CA	mm	-	-	-	-	-	133.4	-	-	-	-	-
	D	mm	11.5		13.5		17	13.5	17	17		21	
	E	mm	32		42		48			48		75	
	F2	mm	M24 x 2		M32 x 1.5		M38 x 1.5			M38 x 1.5		M60 x 1.5	
	G H8	mm	25		33		39			39		61	
	HF/HA	mm	92	102	104	116	118	137	132	125	139	149	164
	K	mm	18.5		20		25			25		48	
	L	mm	43		52		58			58		74	
	M	mm	M10 x 1		M22 x 1.5		M28 x 1.5			M28 x 1.5		M52 x 1.5	
	N H9	mm	15		24		34			34		60	
	Q	mm	4.5		5.5		5.5			5.5		9	
Max.	**R**	mm	56		72		88			105		133.5	
Chuck open	**R1**	mm	86.5		108		131			157.5		195	
	R2 *	mm	99		122.5		145.5			172		217.5	
Max./min.	**S**	mm	20/3		19/-3		22/-2			20/-10		33/0	
Chuck fully closed	**T**	mm	175		220		-			-		-	
Radial jaw stroke	**U**	mm	3.6		4.6		5			6.3		7	
	W	mm	22		26		26			26		38	
	YF/YA	mm	5	15	5	17	5	24	19	5	19	6	21
Max./min.	**Z**	mm	17/0		22/0		24/0			30/0		33/0	
	a	mm	3		3		3			3		3	
Min.	**b**	mm	8.5		12		14			16.5		31	
Min.	**c**	mm	9		13		14			16		38	
	d	mm	2.5 x 60°		2.5 x 60°		2.5 x 60°			2.5 x 60°		2.5 x 60°	
	e	mm	68		85		106			128.5		150	
	f	mm	5		5		5			5		7	
	g	mm	7.5		7.5		8.5			9.5		11.5	
	g1	mm	8		8		9			10		12	
	g2	mm	3.5		3.5		3.5			3.5		5.5	
	j	mm	30		38		44			54		63	
	l1	mm	2.5		2.5		9			9		8.5	
	l2	mm	52		66		78			95		118	
	n h8	mm	10		10		12			14		18	
	n1	mm	16		16		19			22		28	
	o H7	mm	12.68		12.68		19.03			19.03		19.03	
	p1	mm	16		16		21			21		37.5	
	p2	mm	-		-		-			60		80	
	p3	mm	38		49		55			62.5		83	
	p4	mm	-		80		70			80		110	
	p5	mm	65		80		102			102		140	
	p6	mm	70		-		102			120		155	
	p7	mm	-		-		-			135		170	
	p8	mm	-		-		-			-		170	
	q1	mm	-		-		-			30		36	
	q2	mm	36		45		60			60		80	
	r1	mm	M5/7		M5/8		M6/10			M6/10		M6/12	
	r2	mm	M6/14		M8/17		M8/17			M8/17		M10/19	
	r3	mm	M8/17		M8/17		M10/19			M10/19		M12/22	
	s	mm	16		16		16			16		20	
	t	mm	5		5		5			5		5	

* Quick jaw change position

AP-R

Quick jaw change

NT-R

Quick jaw change

Quick change soft and hard top jaws

- Only for AP-RD, AP-RC, NT-RD, NT-RC
- Soft and hard jaws for chucks with serration (2.5 mm x 60°)
- Soft jaws for chucks with tongue & groove
- Torque wrench for quick jaw change

MHB-D

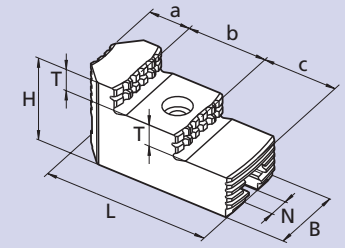

Hard top jaws with 2.5 x 60° serration for AP-RD and NT-RD chucks

First operation jaws, if high concentricity is required jaws have to be ground on chuck.

Chuck Ø	Id. No.*	Serration mm	B mm	H mm	L mm	N mm	T mm	a mm	b mm	c mm	Weight kg/each
170	**18081736**	2.5 x 60°	30	45	65	10	10	23	24	18	0.36
215	**18082136**	2.5 x 60°	35	46	82	10	10.5	24	36	22	0.57
260	**18082636**	2.5 x 60°	45	56	100	12	14.5	27	39	34	1.04
315	**18083136**	2.5 x 60°	45	57	105	14	14	27	42	36	1.09
400	**18084036**	2.5 x 60°	55	73	140	18	18.5	42	49	49	2.27

* the number refers to a set of 3 jaws

WBSA-D

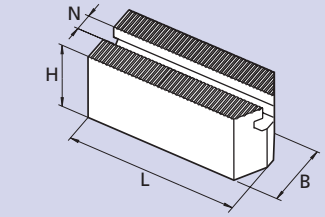

Soft top jaws with 2.5 x 60° serration for AP-RD and NT-RD chucks

Chuck Ø	Id. No.	Serration mm	B mm	H mm	L mm	N mm	Weight kg/each
170	**18071730**	2.5 x 60°	30	40	70	10	0.48
215	**18072130**	2.5 x 60°	35	45	90	10	0.87
260	**18072630**	2.5 x 60°	45	60	100	12	1.70
315	**18073130**	2.5 x 60°	45	60	120	14	2.05
400	**18074030**	2.5 x 60°	55	75	140	18	3.87

WAK-A

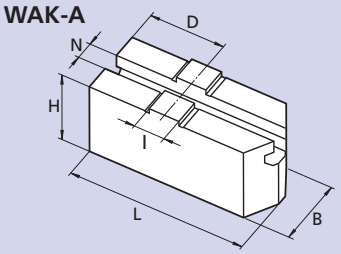

Soft top jaws with tongue & groove "C" for AP-RC and NT-RC chucks

Chuck Ø	Id. No.	B mm	H mm	L mm	N mm	D mm	I mm	Weight kg/each
170	**18041730**	30	37	80	10	30	12.70	0.52
215	**18042130**	35	44	100	10	35	12.70	0.97
260	**18042630**	45	57	120	12	42	19.03	2.02
315	**18043130**	45	57	140	14	50	19.03	2.30
400	**18044030**	55	70	165	18	60	19.03	4.20

Gripping ranges using standard hard top jaws on AP-RD and NT-RD chucks

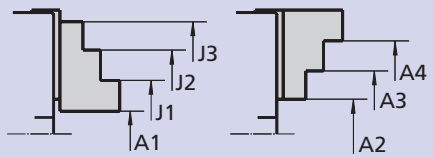

Chuck Ø	Id. No.	A1 mm	A2 mm	A3 mm	A4 mm	J1 mm	J2 mm	J3 mm
170	**18081736**	15-75	-	55-115	105-155	65-120	110-170	145-205
215	**18082136**	20-95	-	65-145	140-200	75-150	140-215	185-260
260	**18082636**	20-105	-	95-175	170-245	80-160	150-235	220-305
315	**18083136**	35-130	-	105-205	190-290	110-195	190-280	265-350
400	**18084036**	45-170	-	145-275	245-370	135-255	230-350	325-450

Spare quick jaw change T-wrenches

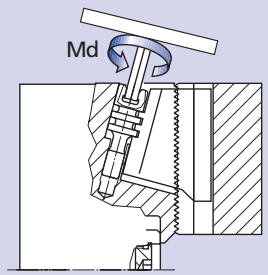

- Normal T-wrenches
- Torque wrenches for correct tightening of the quick jaw change bolt (option)

Chuck Ø	Hexagon mm	Correct torque Md Nm	"T" wrench Id. No.
170	6	23	51500812
215	8	45	51500816
260	10	70	51500820
315	12	110	51500822
400	14	200	51500824

Important for maintenance and safe operation, to be ordered with the chuck

Grease K67®

Special grease for fully sealed chucks included in proofline® series

Cartridge 14 Oz. (DIN 1284)
Grease content 500 g
Id. No. 10731223

Can 1000 g
Id. No. 10731224

- For proofline chucks with permanent grease lubrication
- Basic components: mineral oils and lithium
- Without solvents

Grease gun

Grease gun (DIN 1283) for cartridges 14 Oz. (DIN 1284)
■ Also refillable from grease can 1000 g.

Lubrication set Id. No. 083726
Supply range
- Grease gun
- 1 Adapter flexible for high pressure grease nipple
- 1 Adapter for cone grease nipple

Pull-down chucks ■ Compensating chucks ■ Indexing chucks
Shaft chucks ■ Column chucks ■ 6 jaw 2+2+2 chucks (page 1 of 2)

Page 150

TSF-C
Self centering
Floating jaws

TSR-C
Self centering
Rigid jaws

Pull-down chucks Ø 135 - 650 mm

- Active pull-down
- Tongue & groove
- 3 jaws
- **proofline® chucks** = fully sealed – low maintenance

Page 152

TSF-C
Self centering
Floating jaws

Pull-down chucks Ø 170 - 315 mm

- Active pull-down
- Tongue & groove
- 2 jaws
- **proofline® chucks** = fully sealed – low maintenance

Page 154

TSF-RM
Self centering
Floating jaws

TSR-RM
Self centering
Rigid jaws

Quick jaw change pull-down chucks Ø 170 - 530 mm

- Quick jaw change with pallets
- Active pull-down
- Tongue & groove pallets
- 3 jaws
- **proofline® chucks** = fully sealed – low maintenance

Page 156

TSF-CP
Compensating
Floating jaws

TSR-CP
Compensating
Rigid jaws

Compensating pull-down chucks Ø 135 - 650 mm

- Active pull-down
- Tongue & groove
- 3 jaws
- **proofline® chucks** = fully sealed – low maintenance

Page 158

TSF-CP
Compensating
Floating jaws

Compensating pull-down chucks Ø 170 - 315 mm

- Active pull-down
- Tongue & groove
- 2 jaws
- **proofline® chucks** = fully sealed – low maintenance

Page 160

TSBF-C
Self centering
Floating jaws

TSBR-C
Self centering
Rigid jaws

Pull-down chucks Ø 220 - 330 mm

- Active pull-down
- Large through-hole
- Tongue & groove
- 3 jaws
- **proofline® chucks** = fully sealed – low maintenance

Page 162

TSBF-CP
Compensating
Floating jaws

TSBR-CP
Compensating
Rigid jaws

Compensating pull-down chucks Ø 220 - 330 mm

- Active pull-down
- Large through-hole
- Tongue & groove
- 3 jaws
- **proofline® chucks** = fully sealed – low maintenance

Page 166

FRC-N
Compensating
Rigid jaws

Lever chucks Ø 215 - 365 mm

- Large compensating stroke
- Pull-down
- Center point adjustable
- Tongue & groove
- **proofline® chucks** = fully sealed – low maintenance

Page 168

FRS
Self centering
Rigid jaws

Lever chucks Ø 215 - 365 mm

- Large through hole
- Tongue & groove
- Pull-down
- **proofline® chucks** = fully sealed – low maintenance

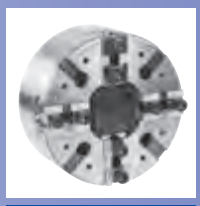

Page 170

TPT-C
2+2 independent jaw movement,
TONGUE & GROOVE

High precision power chucks Ø 210 - 400 mm

- Closed center
- Tongue & groove

Page 172

TPT-C
2+2 independent jaw movement,
TONGUE & GROOVE

High precision power chucks Ø 500 - 800 mm

- Closed center
- Tongue & groove

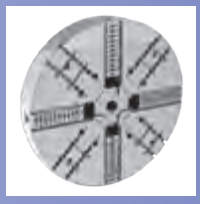

Page 174

TPT-RC
2+2 independent jaw movement,
TONGUE & GROOVE

High precision power chucks Ø 1000 - 2000 mm

- Individual jaw regulation
- Closed center
- Tongue & groove

Page 176

TX-C
Self centering
Rigid jaws

Pull-down chucks Ø 170 - 530 mm

- Active pull-down
- Tongue & groove
- 3 jaws
- **proofline® chucks** = fully sealed – low maintenance

Page 178

TX-RV
Self centering
Rigid jaws

Pull-down chucks Ø 170 - 530 mm

- Active pull-down
- Quick jaw change (internal/external)
- 3 jaws
- **proofline® chucks** = fully sealed – low maintenance

Page 180

TSX-C
Pull down chuck
4 jaws 2+2

High precision pull-down chucks Ø 265 - 315 mm

- Active pull-down
- Tongue & groove
- 2+2 jaws
- **proofline® chucks** = fully sealed – low maintenance

Continuation
on the next page

4

Pull-down chucks ■ Compensating chucks ■ Indexing chucks Shaft chucks ■ Column chucks ■ 6 jaw 2+2+2 chucks (page 2 of 2)

Continuation from previous page

Page 182

TEF-C
2+2+2 equalising
Self centering floating jaws

Pull-down chucks Ø 260 - 850 mm

- Active pull-down
- Tongue & groove
- 6 jaws (2+2+2) all sizes
- **proofline® chucks** = fully sealed – low maintenance

Page 184

SJL
6 jaw (2+2+2) equalising
Self centering

High precision power chucks Ø 225 - 400 mm

- For thin walled or deformation sensitive components
- Tongue & groove/ metric serration
- Centrifugal force compensation
- Jaws equalising as a pair/ mechanism lockable
- **proofline® chucks** = fully sealed – low maintenance

Page 188

IEP-D
2+2+2 equalising
INCH SERRATION

IEP-C
2+2+2 equalising
TONGUE & GROOVE

High precision 6 jaw chucks Ø 400 - 800 mm

- Closed center
- 6 jaws (2+2+2) all sizes
- Centrifugal force compensation
- **proofline® chucks** = fully sealed – low maintenance

Page 190

IEP-D
2+2+2 equalising
MODULE 2 SERRATION

High precision 6 jaw chucks Ø 1000 - 1600 mm

- Closed center
- 6 jaws (2+2+2) all sizes
- Centrifugal force compensation
- **proofline® chucks** = fully sealed – low maintenance

Page 192

AXN®
Automatic
indexing chuck

Automatic indexing chucks Ø 210 - 1250 mm

- Hydraulic clamping and indexing
- Divisions: 4 x 90°/ 8 x 45°/ 3 x 120°/ 6 x 60° or specials
- 2 jaws
- **proofline® chucks** = fully sealed – low maintenance

Page 196

W
Shaft chuck
with face driver

Shaft turning chucks Ø 215 - 460 mm

- Compensating or self centering clamping
- Quick change for jaws and face driver
- Retractable jaws via retractable jaw carrier
- Complete machining of shafts in one setup
- **proofline® chucks** = fully sealed – low maintenance

Page 202

GSA
Shaft chuck
with face driver

Shaft turning chucks Ø 200 - 480 mm

- Compensating clamping of master jaws
- Retractable jaws
- Complete machining of shafts in one setup
- **proofline® chucks** = fully sealed – low maintenance

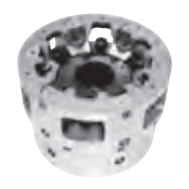

Page 204

ACS
Self centering
column chucks

Pull-down chucks Ø 110 - 450 mm

- ACS-E: for external clamping
- ACS-I: for internal clamping
- 3 and 6 jaws (ACS-E only)

4

TSF-C

Self centering
Floating jaws

TSR-C

Self centering
Rigid jaws

High precision pull-down chucks Ø 135 - 650 mm

- Active pull-down
- Tongue & groove
- 3 jaws

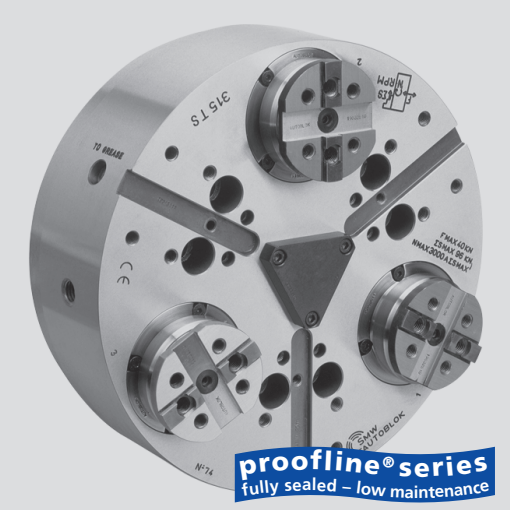

Application/customer benefits

- Clamping of workpieces with highest demand for **parallelism**
- **Highest productivity** with long maintenance intervals
- Constant grip force and long lifetime ensure **constant quality of workpieces**

TSF-C: Floating base jaws to clamp raw and easy deformed workpieces (6-point-contact)
TSR-C: Rigid base jaws for precise clamping on pre machined diameters

Technical features

- Active pull-down
- Centrifugal force compensation
- TONGUE & GROOVE base jaws
- Central bore for coolant and/or air
- Permanent grease lubrication
- **proofline® chucks** = fully sealed – low maintenance

Standard equipment

3-jaw chuck
Mounting bolts

Ordering example

TSF-C 210/A6
or
TSR-C 315/Z220

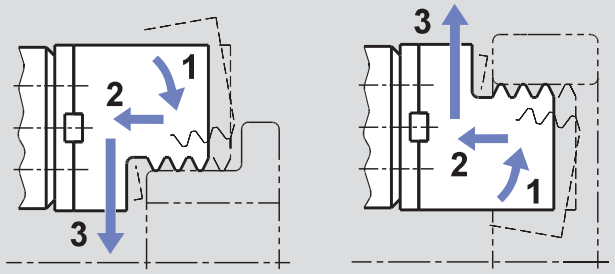

Principle of function:
- **1** pre-clamping - **2** active pull-down - **3** clamping
- For O.D. and I.D. clamping

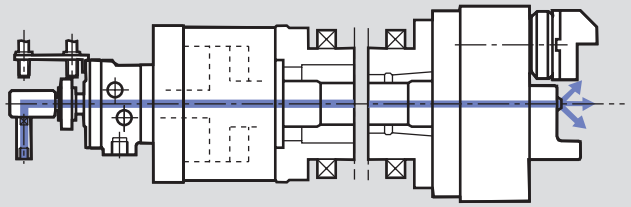

- TSF-C and TSR-C chucks operated with a SIN-S cylinder with central bore for air sensing/coolant flush.

TSF-C

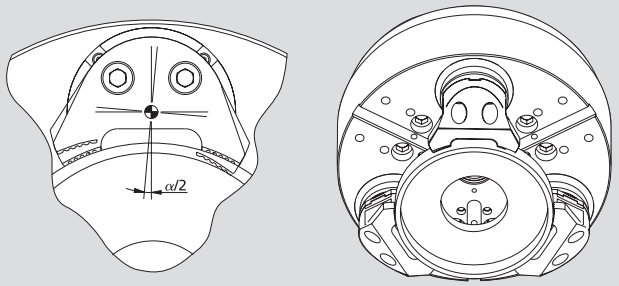

TSF-C: Floating jaws for clamping raw/easy deformed workpieces with 6-point-contact

TSR-C

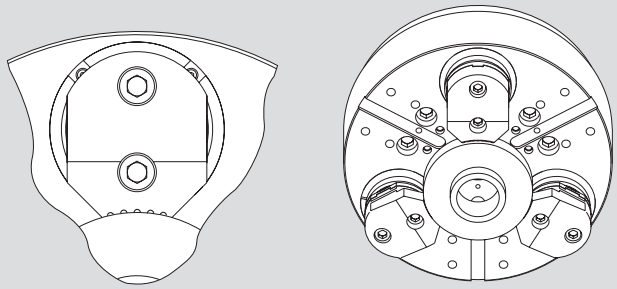

TSR-C: Rigid jaws for precise clamping on premachined diameters with 3-point-contact

Technical data

SMW-AUTOBLOK Type		TSF-C 135 TSR-C 135	TSF-C 170 TSR-C 170	TSF-C 210 TSR-C 210	TSF-C 250 TSR-C 250	TSF-C 315 TSR-C 315	TSF-C 400 TSR-C 400	TSF-C 530 TSR-C 530	TSF-C 650 TSR-C 650
Angular jaw stroke U°	deg.	5°	5.2°	5.2°	4.9°	4.9°	4.7°	4.7°	5°
Radial jaw stroke at distance **h**	mm	3.4	5.3	6.3	7	7	7.5	7.5	9.8
Pull down movement (standard)	mm	0.1	0.1	0.1	0.1	0.1	0.2	0.2	0.4
Axial piston stroke	mm	16	21	25	25	25	30	30	32
Max. draw pull**	kN	12	18	25	40	40	50	60	100
Max. gripping force at distance **h****	kN	29	44	60	96	96	120	150	180
Max. speed*	r.p.m.	8000	5000	4500	3800	3000	2200	1800	1600
Weight (without top jaws)	kg	4.5	15	27	41	66	115	196	386
Moment of inertia	kg·m²	0.015	0.06	0.16	0.34	0.83	2.3	7	21
Recommended actuating cylinders	**SIN-S**	**70**	**85**	**100**	**125**	**125**	**150**	**150-175**	**150-175-200**

* The above maximum speed is allowed with standard weight/height top jaws and applying the full draw pull only. For more informations please contact SMW-AUTOBLOK.
** For internal clamping reduce the draw pull by 30 %.

on request:
Tooling Standard Parts Catalog

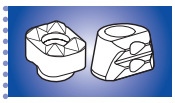

SMW-AUTOBLOK 400

SMW-AUTOBLOK 394

SMW-AUTOBLOK 259

High precision pull-down chucks Ø 135 - 650 mm

- Active pull-down
- Tongue & groove
- 3 jaws

TSF-C

Self centering
Floating jaws

TSR-C

Self centering
Rigid jaws

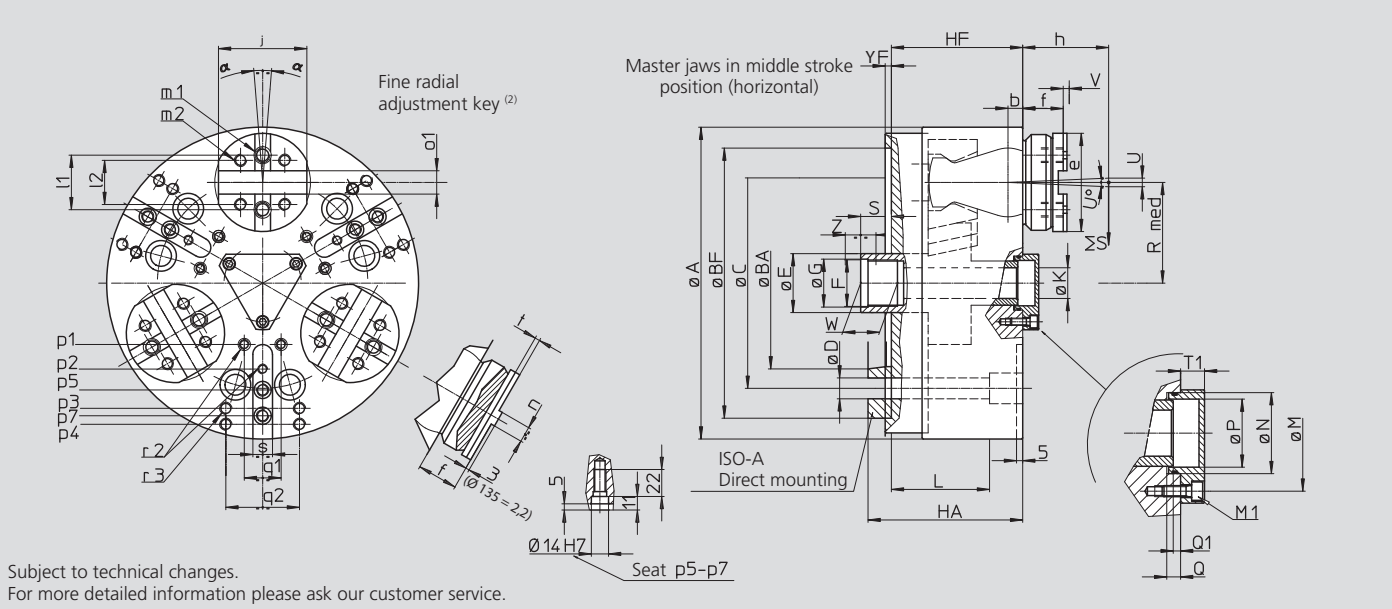

Subject to technical changes.
For more detailed information please ask our customer service.

SMW-AUTOBLOK Type			TSF-C 135 TSR-C 135		TSF-C 170 TSR-C 170				TSF-C 210 TSR-C 210		TSF-C 250 TSR-C 250		TSF-C 315 TSR-C 315		TSF-C 400 TSR-C 400		TSF-C 530 TSR-C 530		TSF-C 650 TSR-C 650	
Mounting			Z115	A4	Z140	A5	Z160	A6	Z170	A6	Z220	A8	Z220	A8	Z300	A11	Z380	A15	Z380	A15
	A	mm	135		173				212		254		315		390		535		650	
	BF/BA H6	mm	115	65.513	140	82.563	160	106.375	170	106.375	220	139.719	220	139.719	300	196.869	380	285.775	380	285.775
	C	mm	82.6		104.8		133.4		133.4		171.4		171.4		235		330.2		330.2	
	D	mm	11		11.5		13.5		13.5		17		17		21		25		25	
	E	mm	25		36				38		48		48		75		75		100	
	F	mm	M20 x 1.5		M28 x 1.5				M32 x 1.5		M38 x 1.5		M38 x 1.5		M60 x 1.5		M60 x 1.5		M80 x 2	
	G H8	mm	20.5		29				33		39		39		61		61		81	
	HF/HA	mm	64.5	72.5	83	98	83	100	100	117	107	126	107	126	127	148	132	155	155	178
Through-hole	K	mm	8.3		14				18		25		25		52		52		75	
	L	mm	52.5		56				82		80		80		74		77		97	
	M	mm	41		36				42		63		63		90		90		128	
Thread/depth	M1	mm	M4/9		M5/13				M6/11		M6/12		M6/12		M8/17		M8/17		M8/17	
	N H8	mm	28		28				34		44		44		75		75		150	
	P	mm	16		23				28.5		37		37		66		66		101	
	Q	mm	6		6				5.5		7.5		7.5		9		9		19	
At middle stroke	Q1	mm	0.5		3				2		4		4		4		4		21	
At middle stroke	Rmed	mm	42		55				64		82		107		130		190		245	
At middle stroke	S	mm	8		18				20		25		25		25		20		20	
	T1	mm	10		10				13		13		13		15		15		15	
Radial stroke	U°	deg.	5°		5.2°				5.2°		4.9°		4.9°		4.7°		4.7°		5°	
Radial stroke (1) @ h	U	mm	3.4		5.3				6.3		7		7		7.5		7.5		9.8	
Pull-down s/d (option)	V	mm	0.1		0.1 (0.6)				0.1 (0.6)		0.1 (0.6)		0.1 (0.6)		0.2 (0.8)		0.2 (0.8)		0.4	
	W	mm	17		25				25		25		25		25		25		36	
Axial wedge stroke	Z	mm	16		21				25		25		25		30		30		32	
Only TSF-C	α	deg.	±2°		±2°				±2°		±1.5°		±1.5°		±1.5°		±1.5°		±1.3°	
	b	mm	8		9				10		12		12		12		12		12	
	e	mm	38		60				75		80		80		105		105		127	
	f	mm	13.8		27				33		33		33		32		32		46	
Reference height	h	mm	39		50				60		70		70		80		80		100	
	j	mm	42		55				65		72		72		100		100		116	
	l1	mm	19		32				38		44.4		44.4		63.5		63.5		63.5	
	l2	mm	15		24				32		36		36		48		48		54	
Thread/depth	m1	mm	M6/10		M10/16				M12/18		M12/18		M12/18		M16/22		M16/22		M20/26	
Thread/depth	m2	mm	M5/12		M8/14				M10/14		M10/14		M10/14		M12/22		M12/22		M16/24	
	n h8	mm	6.35		7.94				7.94		12.7		12.7		12.7		12.7		12.7	
	o1 H7	mm	7.94		12.68				12.68		19.03		19.03		19.03		19.03		19.03	
	p1	mm	-		-				30		50		60		80		(*)		(*)	
	p2	mm	-		35				-		70		80		110		(*)		(*)	
	p3	mm	-		65				80		102		102		140		(*)		(*)	
	p4	mm	-		-				-		-		135		170		(*)		(*)	
	p5	mm	-		-				87		87		-		-		(*)		(*)	
	p7	mm	57.5		-				-		108		108		-		(*)		(*)	
Thread/depth	q1	mm	-		-				8		30		30		36		(*)		(*)	
Thread/depth	q2	mm	18		36				45		60		60		80		(*)		(*)	
	r2	mm	-		M6/12				M6/12		M8/15		M8/15		M10/19		(*)		(*)	
	r3	mm	M6/14		M8/17				M8/17		M10/19		M10/19		M12/22		(*)		(*)	
	s	mm	-		16				16		16		16		20		(*)		(*)	
	t	mm	3.2		4				4		4		4		7		7		7	
	yF	mm	5		5				5		5		5		5		5		6	

(1) Calculated at **h** distance from the chuck's face (where normally the clamping takes place)
* For chuck Ø 135, Ø 530-650 please ask for customer drawing
(2) SMW-AUTOBLOK 164: General catalog

TSF-C

Self centering
Floating jaws

High precision pull-down chucks Ø 170 - 315 mm

- **Active pull-down**
- **Tongue & groove**
- **2 jaws**

Application/customer benefits

- Clamping of workpieces with highest demand for **parallelism**
- Clamping of prismatic or asymmetrical parts with two jaws
- **Highest productivity** with long maintenance intervals
- Constant grip force and long lifetime ensure **constant quality of workpieces**

Technical features

- 2-jaw-design
- Active pull-down
- Floating base jaws for 4 point contact
- Centrifugal force compensation
- TONGUE & GROOVE base jaws
- Central bore for coolant and/or air
- Permanent grease lubrication
- **proofline® chucks**
  = fully sealed – low maintenance

Standard equipment

2-jaw chuck
Mounting bolts

Ordering example

2-jaw chuck
TSF-C 210/A6

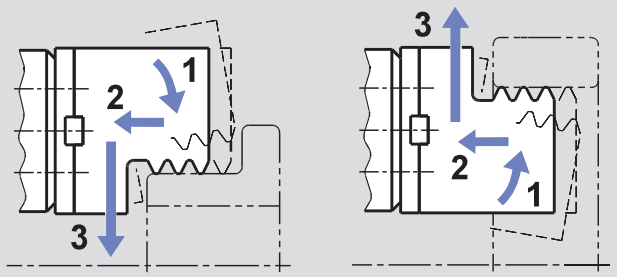

Principle of function:
- **1** pre-clamping - **2** active pull-down - **3** clamping
- For O.D. and I.D. clamping

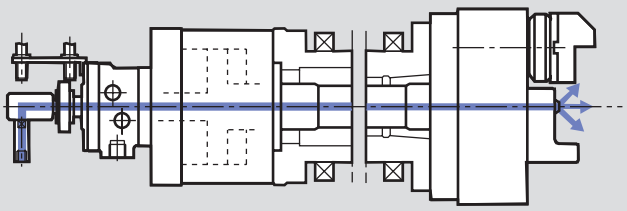

- TSF-C chucks operated with a SIN-S cylinder with central bore for air sensing and/ or coolant flush

TSF-C

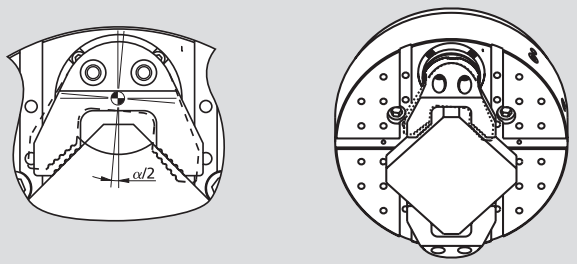

TSF-C: Floating jaws for clamping raw/asymmetric workpieces with 4-point-contact

Technical data

SMW-AUTOBLOK Type		TSF-C 170	TSF-C 210	TSF-C 250	TSF-C 315
Angular jaw stroke U°	deg.	5.2°	5.2°	4.9°	4.9°
Radial jaw stroke at distance **h**	mm	5.3	6.3	7	7
Pull down movement (standard)	mm	0.1	0.1	0.1	0.1
Axial piston stroke	mm	21	25	25	25
Max. draw pull**	kN	12	17	27	27
Max. gripping force at distance **h****	kN	30	40	64	64
Max. speed*	r.p.m.	5000	4500	3800	3000
Weight (plain back without top jaws)	kg	15	27	41	66
Moment of inertia	kg·m²	0.06	0.16	0.34	0.83
Recommended actuating cylinders	**Type**	**SIN-S 70**	**SIN-S 85**	**SIN-S 100**	**SIN-S 100**

* The above maximum speed is allowed with standard weight/height top jaws and applying the full draw pull only. For more informations please contact SMW-AUTOBLOK.
**For internal clamping reduce the draw pull by 30 %.

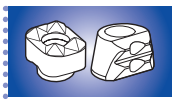
SMW-AUTOBLOK 400

SMW-AUTOBLOK 394

SMW-AUTOBLOK 259

High precision pull-down chucks Ø 170 - 315 mm

- Active pull-down
- Tongue & groove
- 2 jaws

TSF-C

Self centering
Floating jaws

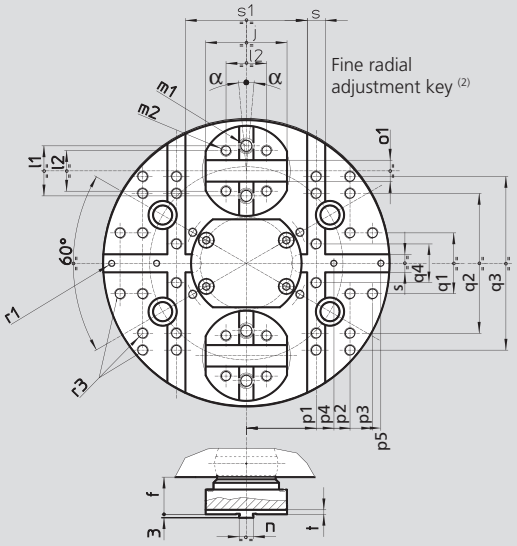

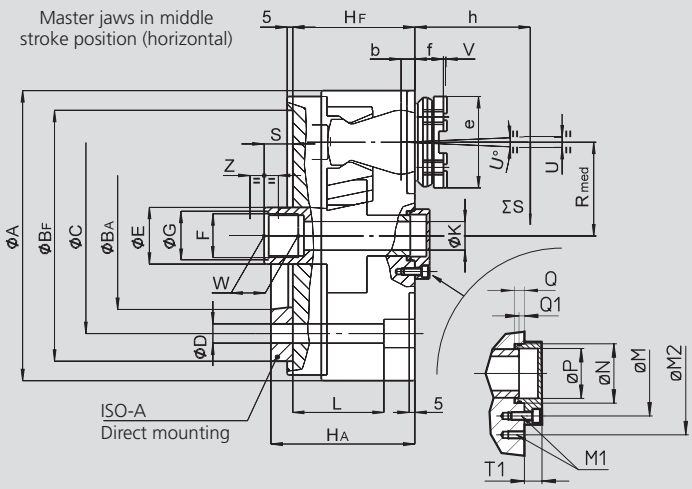

Subject to technical changes.
For more detailed information please ask our customer service.

SMW-AUTOBLOK Type			TSF-C 170		TSF-C 210		TSF-C 250		TSF-C 315	
Mounting			Z140	A5	Z170	A6	Z220	A8	Z220	A8
	A	mm	173		212		254		315	
	BF/BAH6	mm	140	82.563	170	106.375	220	139.719	220	139.719
	C	mm	104.8		133.4		171.4		171.4	
	D	mm	11.5		13.5		17		17	
	E	mm	36		38		48		48	
	F	mm	M28 x 1.5		M32 x 1.5		M38 x 1.5		M38 x 1.5	
	G H8	mm	29		33		39		39	
	HF/HA	mm	83	98	100	117	107	126	107	126
Through-hole	**K**	mm	14		18		25		25	
	L	mm	56		82		80		80	
	M	mm	54		63		82		82	
Thread/depth	**M1**	mm	M8/16		M8/16		M8/16		M8/16	
	M2	mm	-		90		110		110	
	N H5	mm	35		42		70		70	
	P	mm	30.2		36.5		56		56	
	Q	mm	6		7.5		7.5		7.5	
At middle stroke	**Q1**	mm	3.2		2.5		4.5		4.5	
At middle stroke	**Rmed**	mm	55		64		82		107	
At middle stroke	**S**	mm	18.2		20.5		25.5		25.5	
	T1	mm	11.5		14.5		14		14	
Radial stroke	**U°**	deg.	5.2°		5.2°		4.9°		4.9°	
Radial stroke at distance **h** (1)	**U**	mm	5.3		6.3		7		7	
Pull-down s/d (option)	**V**	mm	0.1		0.1		0.1		0.1	
	W	mm	25		25		30		30	
Axial piston stroke	**Z**	mm	21		25		25		25	
	α	deg.	±2°		±2°		±1.5°		±1.5°	
	b	mm	9		10		12		12	
	e	mm	60		75		80		80	
	f	mm	27		33		33		33	
Reference height	**h**	mm	50		60		70		70	
	j	mm	55		65		72		72	
	l1	mm	32		38		44.4		44.4	
	l2	mm	24		32		36		36	
Thread/depth	**m1**	mm	M10/16		M12/18		M12/18		M12/18	
Thread/depth	**m2**	mm	M8/14		M10/14		M10/14		M10/14	
	n h8	mm	7.94		7.94		12.7		12.7	
	o1 H7	mm	12.68		12.68		19.03		19.03	
	p1	mm	50		55		62		62	
	p2	mm	66		80		92		92	
	p3	mm	78		95		112		122	
	p4	mm	60		55		62		62	
	p5	mm	80		80		92		92	
	q1	mm	30		30		54		54	
	q2	mm	84		110		128		128	
	q3	mm	-		-		-		202	
	q4	mm	20		30		54		54	
Thread/depth	**r1**	mm	M6/14		M6/14		M6/14		M6/14	
Thread/depth	**r3**	mm	M8/16		M8/17		M10/18		M10/18	
	s H6	mm	16		16		16		16	
	s1 k5	mm	84		94		108		108	
	t	mm	4		4		4		4	

(1) Calculated at **h** distance from the chuck's face (where normally the clamping takes place)
(2) SMW-AUTOBLOK 164: General catalog

TSF-RM

Self centering
Floating jaws

TSR-RM

Self centering
Rigid jaws

Quick jaw change pull-down chucks
Ø 170 - 530 mm

- Active pull-down
- Quick jaw change with pallets
- Tongue & groove pallets - 3 jaws

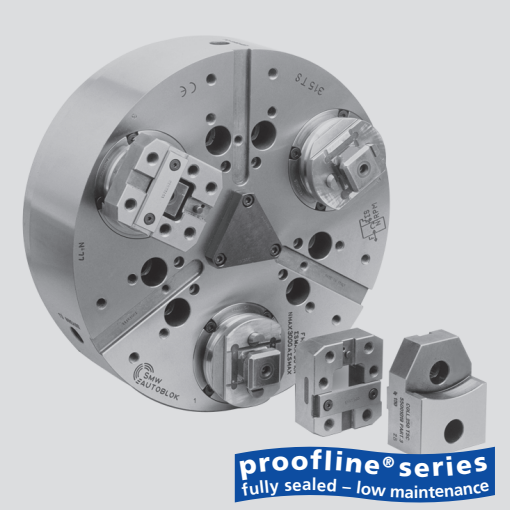

Application/customer benefits

- **Quick jaw change** via pallets for quick setup
- Clamping of workpieces with highest demand for **parallelism**
- **Highest productivity** with long maintenance intervals
- Constant grip force and long lifetime ensure **constant quality of workpieces**

TSF-RM: Floating base jaws to clamp raw and/or easy deformed workpieces (6-point-contact)

TSR-RM: Rigid base jaws for precise clamping on premachined diameters

Technical features

- For O.D. clamping only
- Active pull-down
- Precise quick-jaw-change via pallets
- Centrifugal force compensation
- Central bore for coolant and/or air
- Permanent grease lubrication
- **proofline® chucks** = fully sealed - low maintenance

Standard equipment

3-jaw chuck
Key
Mounting bolts

Ordering example

TSF-RM 210/A6
or
TSR-RM 315/Z220

TSF-RM/TSR-RM
Quick jaw change with pallets

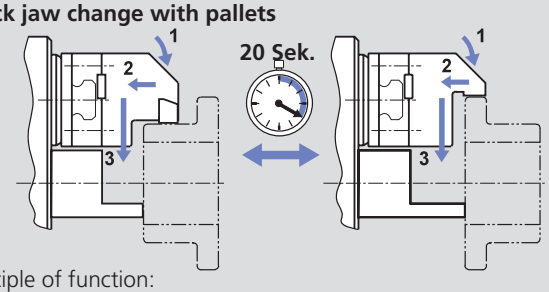

Principle of function:
- **1** pre-clamping - **2** active pull-down - **3** clamping
- For O.D. clamping only

TSF-RM/TSR-RM

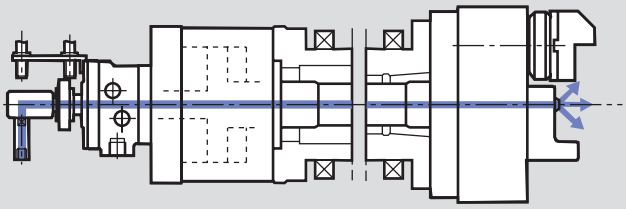

- TSF-RM and TSR-RM chucks operated with a SIN-S cylinder with central bore for air sensing and/ or coolant flush

TSF-RM

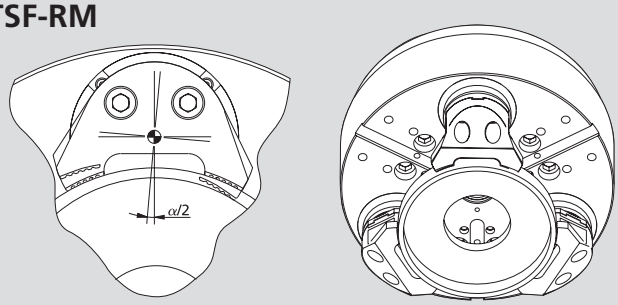

TSF-RM: **Floating jaws** to clamp raw/easy deformed workpieces quick jaw change with pallets with 6-point-contact.

TSR-RM

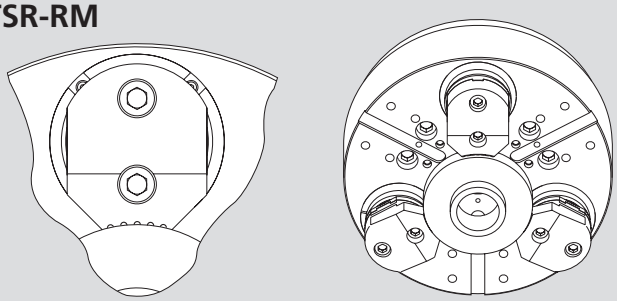

TSR-RM: **Rigid jaws** for precise clamping on premachined diameters with 3-point-contact, quick jaw change with pallets.

Technical data

SMW-AUTOBLOK Type		TSF-RM 170 TSR-RM 170	TSF-RM 210 TSR-RM 210	TSF-RM 250 TSR-RM 250	TSF-RM 315 TSR-RM 315	TSF-RM 400 TSR-RM 400	TSF-RM 530 TSR-RM 530
Angular jaw stroke U°	deg.	5.2°	5.2°	4.9°	4.9°	4.7°	4.7°
Radial jaw stroke at distance **h**	mm	5.3	6.3	7	7	7.5	7.5
Pull down movement (standard)	mm	0.1	0.1	0.1	0.1	0.2	0.2
Axial piston stroke	mm	21	25	25	25	30	30
Max. draw pull**	kN	18	25	40	40	50	60
Max. gripping force at distance **h ****	kN	44	60	96	96	120	150
Max. speed*	r.p.m.	5000	4500	3800	3000	2200	1800
Weight (plain back without top jaws)	kg	15	27	41	66	115	196
Moment of inertia	kg·m²	0.06	0.16	0.34	0.83	2.3	7
Recommended actuating cylinders	**Type**	**SIN-S 85**	**SIN-S 100**	**SIN-S 125**	**SIN-S 125**	**SIN-S 150**	**SIN-S 150-175**

* The above maximum speed is allowed with standard weight/height top jaws and applying the full draw pull only. For more informations please contact SMW-AUTOBLOK.

** For internal clamping reduce the draw pull by 30 %.

on request:
Tooling Standard Parts Catalog

SMW-AUTOBLOK 164

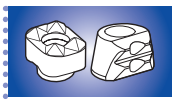

SMW-AUTOBLOK 400

SMW-AUTOBLOK 394

SMW-AUTOBLOK 259

Quick jaw change pull-down chucks
Ø 170 - 530 mm

- Active pull-down
- Quick jaw change with pallets
- Tongue & groove pallets - 3 jaws

TSF-RM
Self centering
Floating jaws

TSR-RM
Self centering
Rigid jaws

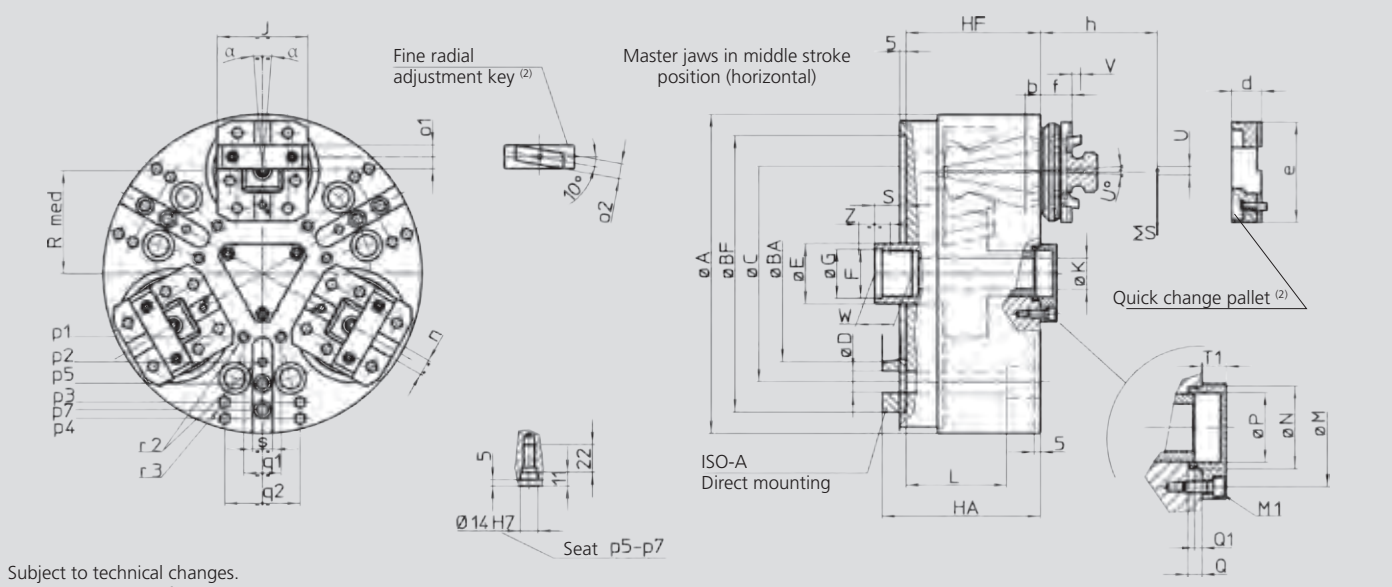

Subject to technical changes.
For more detailed information please ask our customer service.

SMW-AUTOBLOK Type			TSF-RM 170 TSR-RM 170				TSF-RM 210 TSR-RM 210		TSF-RM 250 TSR-RM 250		TSF-RM 315 TSR-RM 315		TSF-RM 400 TSR-RM 400		TSF-RM 530 TSR-RM 530	
Mounting			Z140	A5	Z160	A6	Z170	A6	Z220	A8	Z220	A8	Z300	A11	Z380	A15
	A	mm	173				212		254		315		390		535	
	BF/BA H6	mm	140	82.563	160	106.375	170	106.375	220	139.719	220	139.719	300	196.869	380	285.775
	C	mm	104.8		133.4		133.4		171.4		171.4		235		330.2	
	D	mm	11.5		13.5		13.5		17		17		21		25	
	E	mm	36				38		48		48		75		75	
	F	mm	M28 x 1.5				M32 x 1.5		M38 x 1.5		M38 x 1.5		M60 x 1.5		M60 x 1.5	
	G H8	mm	29				33		39		39		61		61	
	HF/HA	mm	83	98	83	100	100	117	107	126	107	126	127	148	132	155
Through-hole	**K**	mm	14				18		25		25		52		52	
	L	mm	56				82		80		80		74		77	
	M	mm	36				42		63		63		90		90	
Thread/depth	**M1**	mm	M5/13				M6/11		M6/12		M6/12		M8/17		M8/17	
	N H8	mm	28				34		44		44		75		75	
	P	mm	23				28.5		37		37		66		66	
	Q	mm	6				5.5		7.5		7.5		9		9	
At middle stroke	**Q1**	mm	3				2		4		4		4		4	
At middle stroke	**Rmed**	mm	55				64		82		107		130		190	
At middle stroke	**S**	mm	18				20		25		25		25		20	
	T1	mm	10				13		13		13		15		15	
Radial stroke	**U°**	deg.	5.2°				5.2°		4.9°		4.9°		4.7°		4.7°	
Radial stroke (1) @ **h**	**U**	mm	5.3				6.3		7		7		7.5		7.5	
Pull-down s/d (option)	**V**	mm	0.1				0.1		0.1		0.1		0.2		0.2	
	W	mm	25				25		25		25		25		25	
Axial piston stroke	**Z**	mm	21				25		25		25		30		30	
Only TSF-RM max.	**α**	deg.	±2°				±2°		±1.5°		±1.5°		±1.5°		±1.5°	
	b	mm	9				10		12		12		12		12	
	d	mm	18				22		24		24		30		30	
	e	mm	60				75		80		80		105		105	
	f	mm	24				25		25		25		28.5		28.5	
Reference height	**h**	mm	50				60		70		70		80		80	
	j	mm	55				65		72		72		100		100	
	n h8	mm	7.94				7.94		12.7		12.7		12.7		12.7	
	o1 H7	mm	12.68				12.68		19.03		19.03		19.03		19.03	
	o2 h7	mm	9				9		12		12		12		12	
	p1	mm	-				30		50		60		(*)		(*)	
	p2	mm	35				-		70		80		(*)		(*)	
	p3	mm	65				80		102		102		(*)		(*)	
	p4	mm	-				-		-		135		(*)		(*)	
	p5	mm	-				87		87		-		(*)		(*)	
	p7	mm	-				-		108		108		(*)		(*)	
	q1	mm	-				8		30		30		(*)		(*)	
	q2	mm	36				45		60		60		(*)		(*)	
Thread/depth	**r2**	mm	M6/12				M6/12		M8/15		M8/15		(*)		(*)	
Thread/depth	**r3**	mm	M8/17				M8/17		M10/19		M10/19		(*)		(*)	
	s	mm	16				16		16		16		20		20	

(1) Calculated at **h** distance from the chuck's face (where normally the clamping takes place).
* For chuck Ø 400-530 please ask for customer drawing.
(2) SMW-AUTOBLOK 164: General catalog

TSF-CP

Compensating
Floating jaws

TSR-CP

Compensating
Rigid jaws

Compensating pull-down chucks Ø 135 - 650 mm

- Active pull-down
- Tongue & groove
- 3 jaws

Application/customer benefits

- Clamping of shafts or chuck parts where the reference is not the O.D. but a center or a centering dia.
- A center point or a centering insert will center the workpieces and the jaws will clamp compensating and actively pull the workpiece down to the datum.

TSF-CP: Compensating clamping with active pull down and floating base jaws
TSR-CP: Compensating clamping with active pull down and rigid base jaws

Technical features

- Active pull-down
- Compensating clamping
- Centrifugal force compensation
- Central bore for coolant and/or air
- TONGUE & GROOVE base jaws
- Permanent grease lubrication
- **proofline® chucks** = fully sealed - low maintenance

Standard equipment

3-jaw chuck
Mounting bolts

Ordering example

TSF-CP 210/A6
or
TSR-CP 315/Z220

TSF-CP/TSR-CP

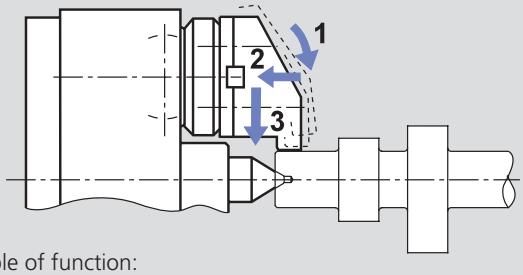

Principle of function:
- **1** compensating pre-clamping - **2** active pull-down - **3** clamping

TSF-CP/TSR-CP

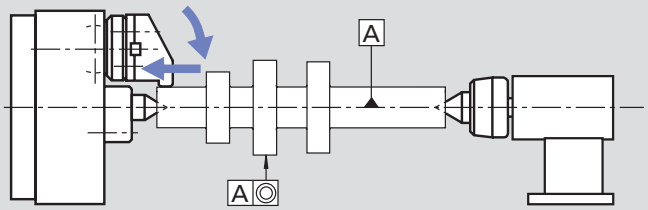

- The workpiece is actively pulled down to the center point. The tailstock just supplies the necessary force to support the workpiece. The result is an exact cylindrical and straight workpiece.

Non active pull down compensating chuck

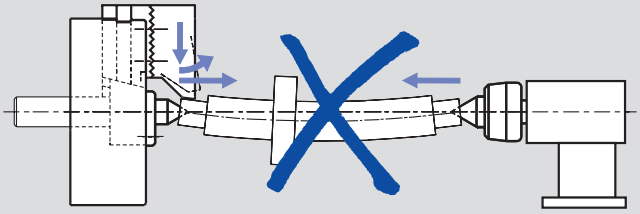

- The workpiece is lifted by the jaws from the center point. When a higher tailstock force is applied for compensation, the workpiece will be bent.

TSF-CP

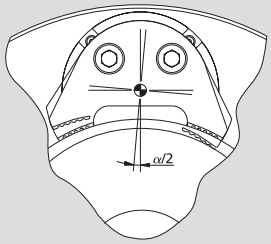

Floating jaws

TSR-CP

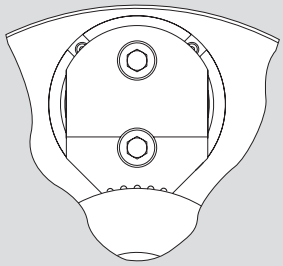

Rigid jaws

Technical data

SMW-AUTOBLOK Type		TSF-CP 135 TSR-CP 135	TSF-CP 170 TSR-CP 170	TSF-CP 210 TSR-CP 210	TSF-CP 250 TSR-CP 250	TSF-CP 315 TSR-CP 315	TSF-CP 400 TSR-CP 400	TSF-CP 530 TSR-CP 530	TSF-CP 650 TSR-CP 650
Angular jaw stroke U°	deg.	5°	5.2°	5.2°	4.9°	4.9°	4.7°	4.7°	5°
Radial jaw stroke at distance **h**	mm	3.4	5.3	6.3	7	7	7.5	7.5	9.8
Pull down movement (standard)	mm	0.1	0.1	0.1	0.1	0.1	0.2	0.2	0.4
Axial piston stroke	mm	16	21	25	25	25	30	30	32
Compensation (on the dia.) at distance **h**	mm	±0.7	±1	±1.5	±2.5	±2.5	±2.5	±2.5	±3
Max. draw pull**	kN	12	18	25	40	40	50	60	100
Max. gripping force at distance **h****	kN	29	44	60	96	96	120	150	180
Max. speed*	r.p.m.	8000	5000	4500	3800	3000	2200	1800	1600
Weight (plain back without top jaws)	kg	4.5	15	27	41	66	115	196	386
Moment of inertia	kg·m²	0.015	0.06	0.16	0.34	0.83	2.3	7	21
Recommended actuating cylinders	**SIN-S**	**70**	**85**	**100**	**125**	**125**	**150**	**150-175**	**150-175-200**

* The above maximum speed is allowed with standard weight/height top jaws and applying the full draw pull only. For more informations please contact SMW-AUTOBLOK.
**For internal clamping reduce the draw pull by 30 %.

on request:
Tooling Standard Parts Catalog

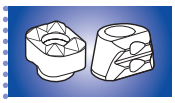

SMW-AUTOBLOK 400

SMW-AUTOBLOK 394

SMW-AUTOBLOK 259

Compensating pull-down chucks Ø 135 - 650 mm

- Active pull-down
- Tongue & groove
- 3 jaws

TSF-CP
Compensating
Floating jaws

TSR-CP
Compensating
Rigid jaws

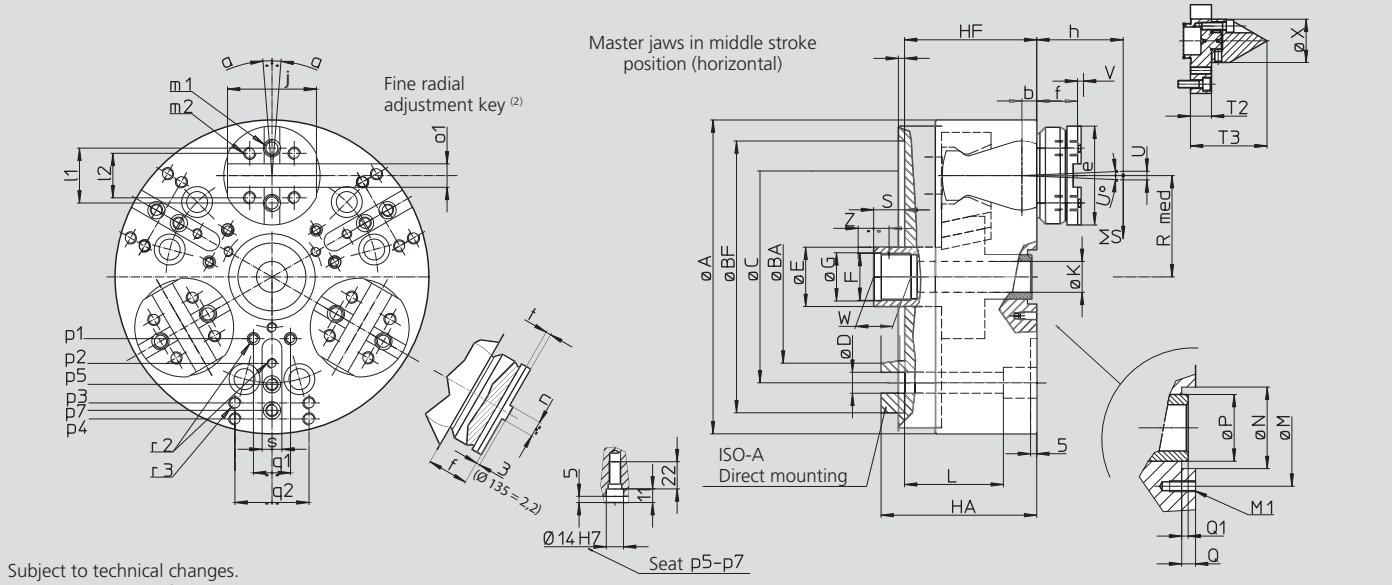

Subject to technical changes.
For more detailed information please ask our customer service.

SMW-AUTOBLOK Type			TSF-CP 135 TSR-CP 135		TSF-CP 170 TSR-CP 170				TSF-CP 210 TSR-CP 210		TSF-CP 250 TSR-CP 250		TSF-CP 315 TSR-CP 315		TSF-CP 400 TSR-CP 400		TSF-CP 530 TSR-CP 530		TSF-CP 650 TSR-CP 650	
Mounting			**Z115**	**A4**	**Z140**	**A5**	**Z160**	**A6**	**Z170**	**A6**	**Z220**	**A8**	**Z220**	**A8**	**Z300**	**A11**	**Z380**	**A15**	**Z380**	**A15**
	A	mm	135		173				212		254		315		390		535		650	
	BF/BAH6	mm	115	63.513	140	82.563	160	106.375	170	106.375	220	139.719	220	139.719	300	196.869	380	285.775	380	285.775
	C	mm	82.6		104.8		133.4		133.4		171.4		171.4		235		330.2		330.2	
	D	mm	11		11.5		13.5		13.5		17		17		21		25		25	
	E	mm	25		36				38		48		48		75		75		100	
	F	mm	M20 x 1.5		M28 x 1.5				M32 x 1.5		M38 x 1.5		M38 x 1.5		M60 x 1.5		M60 x 1.5		M80 x 2	
	G H8	mm	20.5		29				33		39		39		61		61		81	
	HF/HA	mm	64.5	72.5	83	98	83	100	100	117	107	126	107	126	127	148	132	155	155	178
Through-hole	**K**	mm	8.3		4				12.5		25		25		52		52		75	
	L	mm	52.5		56				82		80		80		74		77		97	
	M	mm	41		36				42		82		-		90		90		128	
Thread/depth	**M1**	mm	M4/9		M5/10				M6/11		M8/17		-		M8/17		M8/17		M8/17	
	N H8	mm	28		28				34		70		85		75		75		150	
	P	mm	25		20				28		55		55		66		66		101	
	Q	mm	6		6				5.5		7.5		7.5		9		9		19	
At middle stroke	**Q1**	mm	0.5		3				2		4		4		4		4		21	
At middle stroke	**Rmed**	mm	42		55				64		82		107		130		190		245	
At middle stroke	**S**	mm	8		18				20		25		25		25		20		20	
	T2	mm	3.5		17				11		22		26		28		28		-	
	T3	mm	22.5		62				67		68		72		95		95		-	
Radial stroke	**U°**	deg.	5°		5.2°				5.2°		4.9°		4.9°		4.7°		4.7°		5°	
Radial stroke (1) @ h	**U**	mm	3.4		5.3				6.3		7		7		7.5		7.5		9.8	
Pull-down s/d (option)	**V**	mm	0.1		0.1				0.1		0.1		0.1		0.2		0.2		0.4	
	W	mm	17		25				25		25		25		25		25		36	
	X	mm	12		35				46		60		60		116		116		-	
Axial piston stroke	**Z**	mm	16		21				25		25		25		30		30		32	
Only TSF-CP max.	**α**	deg.	±2°		±2°				±2°		±1.5°		±1.5°		±1.5°		±1.5°		±1.3°	
	b	mm	8		9				10		12		12		12		12		12	
	e	mm	38		60				75		80		80		105		105		127	
	f	mm	13.8		27				33		33		33		32		32		46	
Reference height	**h**	mm	39		50				60		70		70		80		80		100	
	j	mm	42		55				65		72		72		100		100		116	
	l1	mm	19		32				38		44.4		44.4		63.5		63.5		63.5	
	l2	mm	15		24				32		36		36		48		48		54	
Thread/depth	**m1**	mm	M6/10		M10/16				M12/18		M12/18		M12/18		M16/22		M16/22		M20/26	
Thread/depth	**m2**	mm	M5/12		M8/14				M10/14		M10/14		M10/14		M12/22		M12/22		M16/24	
	n h8	mm	6.35		7.94				7.94		12.7		12.7		12.7		12.7		12.7	
	o1 H7	mm	7.94		12.68				12.68		19.03		19.03		19.03		19.03		19.03	
	p1	mm	-		-				30		50		60		80		80		(*)	
	p2	mm	-		35				-		70		80		110		(*)		(*)	
	p3	mm	-		65				80		102		102		140		(*)		(*)	
	p4	mm	-		-				-		-		135		170		(*)		(*)	
	p5	mm	-		-				87		87		-		-		(*)		(*)	
	p7	mm	57.5		-				-		108		108		-		(*)		(*)	
	q1	mm	-		-				8		30		30		36		(*)		(*)	
	q2	mm	18		36				45		60		60		80		(*)		(*)	
Thread/depth	**r2**	mm	-		M6/12				M6/12		M8/15		M8/15		M10/19		(*)		(*)	
Thread/depth	**r3**	mm	M6/14		M8/17				M8/17		M10/19		M10/19		M12/22		(*)		(*)	
	s	mm	-		16				16		16		16		20		(*)		(*)	
	t	mm	3.2		4				4		4		4		7		7		7	
	yF	mm	5		5				5		5		5		5		5		6	

(1) Calculated at **h** distance from the chuck's face (where normally the clamping takes place).
* For chuck Ø 135, Ø 530-650 please ask for customer drawing.
(2) SMW-AUTOBLOK 164: General catalog

TSF-CP

Compensating
Floating jaws

Compensating pull-down chucks Ø 170 - 315 mm

- Active pull-down
- Tongue & groove
- 2 jaws

Application/customer benefits

- Clamping of rectangular or irregular shaped shafts or clamping of shafts or chuck parts where the reference is not the O.D. but a center or a centering dia.
- A center point or a centering insert will center the workpieces and the jaws will clamp compensating and actively pull the workpiece down to the datum

Technical features

- 2-jaw-design
- Active pull-down
- Compensating clamping
- Floating base jaws for 4 point contact
- Centrifugal force compensation
- TONGUE & GROOVE base jaws
- Permanent grease lubrication
- **proofline® chucks** = fully sealed - low maintenance

Standard equipment

2-jaw chuck
Mounting bolt

Ordering example

TSF-CP 210/A6

TSF-CP

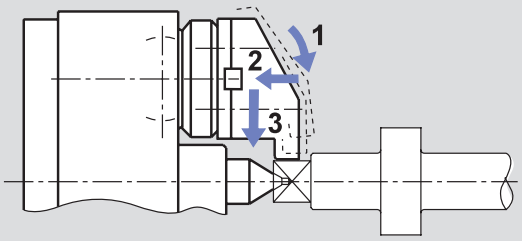

Principle of function:
- **1** compensating pre-clamping - **2** active pull-down - **3** clamping

TSF-CP

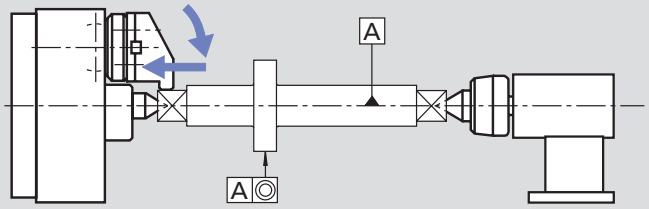

- The workpiece is actively pulled down to the center point. The tailstock just supplies the necessary force to support the workpiece. The result is an exact cylindrical and straight workpiece.

Non active pull down compensating chuck

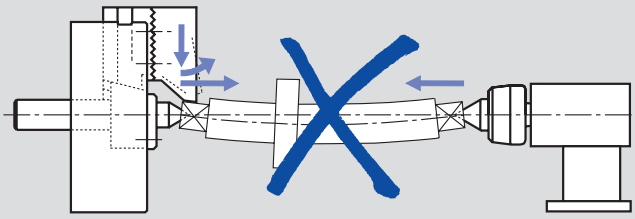

- The workpiece is lifted by the jaws from the center point. When a higher tailstock force is applied for compensation, the workpiece will be bent.

TSF-CP

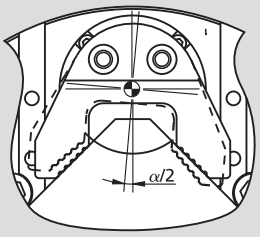

Floating jaws

Technical data

SMW-AUTOBLOK Type		TSF-CP 170	TSF-CP 210	TSF-CP 250	TSF-CP 315
Angular jaw stroke U°	deg.	5.2°	5.2°	4.9°	4.9°
Radial jaw stroke at distance **h**	mm	5.3	6.3	7	7
Pull down movement (standard)	mm	0.1	0.1	0.1	0.1
Axial piston stroke	mm	21	25	25	25
Compensation (on the dia.) at distance **h**	mm	±1.5	±1.5	±2.5	±2.5
Max. draw pull**	kN	12	17	27	27
Max. gripping force at distance **h****	kN	30	40	64	64
Max. speed*	r.p.m.	5000	4500	3800	3000
Weight (plain back without top jaws)	kg	15	27	41	66
Moment of inertia	kg·m²	0.06	0.16	0.34	0.83
Recommended actuating cylinders	**Type**	**SIN-S 70**	**SIN-S 85**	**SIN-S 100**	**SIN-S 100**

* The above maximum speed is allowed with standard weight/height top jaws and applying the full draw pull only. For more informations please contact SMW-AUTOBLOK.

** For internal clamping reduce the draw pull by 30 %.

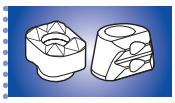
SMW-AUTOBLOK 400

SMW-AUTOBLOK 394

SMW-AUTOBLOK 259

Compensating pull-down chucks Ø 170 - 315 mm

- Active pull-down
- Tongue & groove
- 2 jaws

TSF-CP

Compensating
Floating jaws

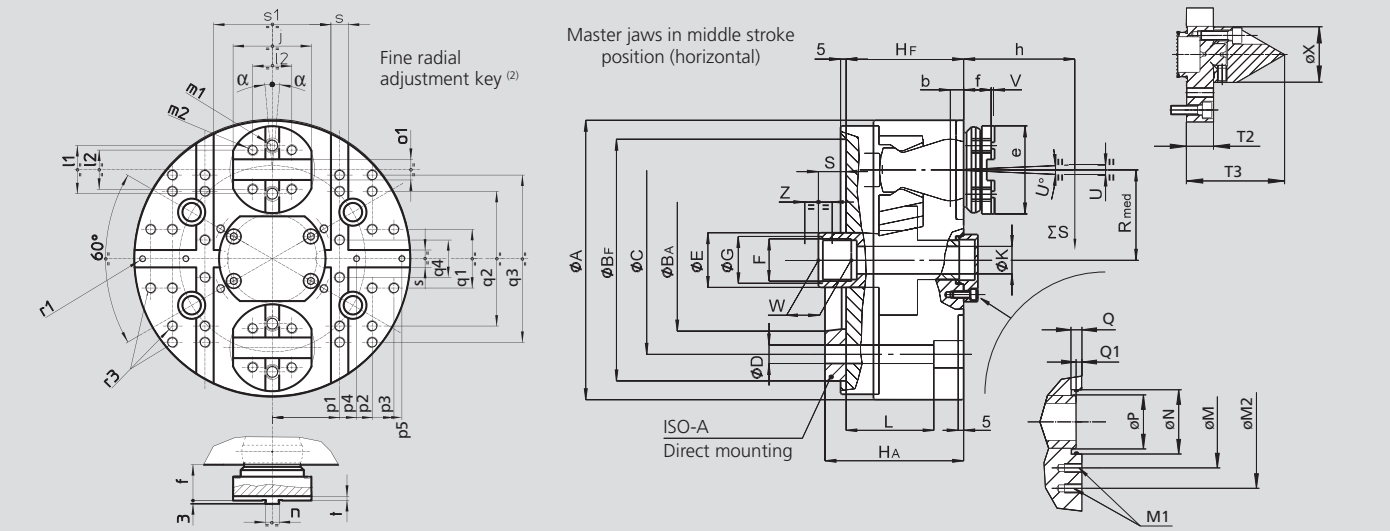

Subject to technical changes.
For more detailed information please ask our customer service.

SMW-AUTOBLOK Type			TSF-CP 170		TSF-CP 210		TSF-CP 250		TSF-CP 315	
Mounting			**Z140**	**A5**	**Z170**	**A6**	**Z220**	**A8**	**Z220**	**A8**
	A	mm	173		212		254		315	
	BF/BAH6	mm	140	82.563	170	106.375	220	139.719	220	139.719
	C	mm	104.8		133.4		171.4		171.4	
	D	mm	11.5		13.5		17		17	
	E	mm	36		38		48		48	
	F	mm	M28 x 1.5		M32 x 1.5		M38 x 1.5		M38 x 1.5	
	G H8	mm	29		33		39		39	
	HF/HA	mm	83	98	100	117	107	126	107	126
Through-hole	**K**	mm	14		18		25		25	
	L	mm	56		82		80		80	
	M	mm	54		63		82		82	
Thread/depth	**M1**	mm	M8/16		M8/16		M8/16		M8/16	
	M2	mm	-		90		110		110	
	N H5	mm	35		42		70		70	
	P	mm	30.2		36.5		56		56	
	Q	mm	6		7.5		7.5		7.5	
At middle stroke	**Q1**	mm	3.2		2.5		4.5		4.5	
At middle stroke	**Rmed**	mm	55		64		82		107	
At middle stroke	**S**	mm	18.2		20.5		25.5		25.5	
	T2	mm	17		21		22		22	
	T3	mm	62		67		68		68	
Radial stroke	**U°**	deg.	5.2°		5.2°		4.9°		4.9°	
Radial stroke (1) @ h	**U**	mm	5.3		6.3		7		7	
Pull-down s/d (option)	**V**	mm	0.1		0.1		0.1		0.1	
	W	mm	25		25		30		30	
	X	mm	35		42		60		60	
Axial piston stroke	**Z**	mm	21		25		25		25	
	α	deg.	±2°		±2°		±1.5°		±1.5°	
	b	mm	9		10		12		12	
	e	mm	60		75		80		80	
	f	mm	27		33		33		33	
Reference height	**h**	mm	50		60		70		70	
	j	mm	55		65		72		72	
	l1	mm	32		38		44.4		44.4	
	l2	mm	24		32		36		36	
Thread/depth	**m1**	mm	M10/16		M12/18		M12/18		M12/18	
Thread/depth	**m2**	mm	M8/14		M10/14		M10/14		M10/14	
	n h8	mm	7.94		7.94		12.7		12.7	
	o1 H7	mm	12.68		12.68		19.03		19.03	
	p1	mm	50		55		62		62	
	p2	mm	66		80		92		92	
	p3	mm	78		95		112		122	
	p4	mm	60		55		62		62	
	p5	mm	80		80		92		92	
	q1	mm	30		30		54		54	
	q2	mm	84		110		128		128	
	q3	mm	-		-		-		202	
	q4	mm	20		30		54		54	
Thread/depth	**r1**	mm	M6/14		M6/14		M6/14		M6/14	
Thread/depth	**r3**	mm	M8/16		M8/17		M10/18		M10/18	
	s H6	mm	16		16		16		16	
	s1 k5	mm	84		94		108		108	
	t	mm	4		4		4		4	

(1) Calculated at **h** distance from the chuck's face (where normally the clamping takes place)
(2) SMW-AUTOBLOK 164: General catalog

TSBF-C

Self centering
Floating jaws

TSBR-C

Self centering
Rigid jaws

High precision pull-down chucks Ø 220 - 330 mm

- Active pull-down
- Tongue & groove
- Large through hole
- 3 jaws

Application/customer benefits

- Clamping of workpieces with highest demand for **parallelism**
- **Highest productivity** with long maintenance intervals
- Constant grip force and long lifetime ensure **constant quality of workpieces**
- Through hole to insert long workpieces or for special clamping applications

TSBF-C: Floating base jaws to clamp raw and easy deformed workpieces (6-point-contact)
TSBR-C: Rigid base jaws for precise clamping on pre machined diameters

Technical features

- Active pull-down
- Centrifugal force compensation
- TONGUE & GROOVE base jaws
- **proofline® chucks** = fully sealed – low maintenance
- Permanent grease lubrication
- Large through hole

Standard equipment

3 jaw chuck
Mounting bolts

Ordering example

TSBF-C 220/A6
or TSBR-C 330/Z300

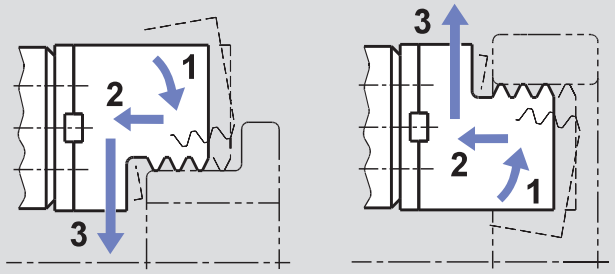

Principle of function:
- **1** pre-clamping - **2** active pull-down - **3** clamping
- For O.D. and I.D. clamping

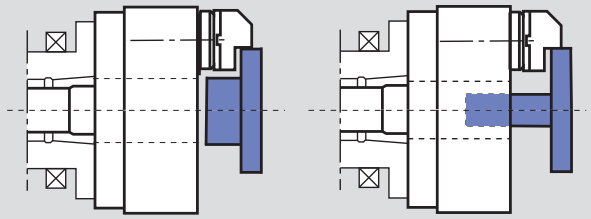

- Use of the larger space between the master jaws for bulky parts.
- Use of the bore for shaft or special locators or centering equipment.

TSBF-C

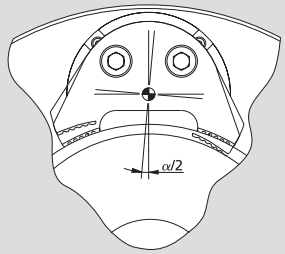

TSBF-C:
Floating jaws for clamping raw/ easy deformed workpieces with 6-point-contact.

TSBR-C

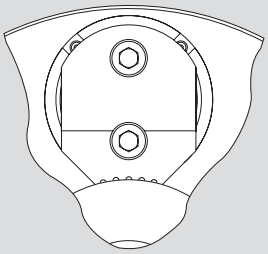

TSBR-C:
Rigid jaws for precise clamping on premachined diameters with 3-point-contact.

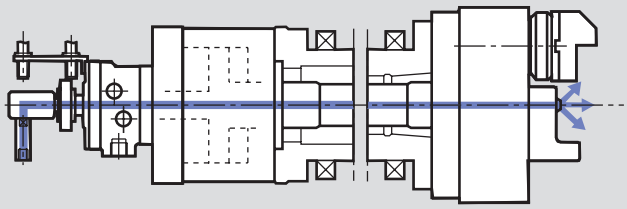

- **TSBF-C** and **TSBR-C** chucks operated with a SIN-S cylinder with central bore for air sensing/coolant flush.

Technical data

SMW-AUTOBLOK Type		TSBF-C 220 TSBR-C 220	TSBF-C 260 TSBR-C 260	TSBF-C 330 TSBR-C 330
Angular jaw stroke U°	deg.	5.2°	5.2°	5°
Radial jaw stroke at distance **h**	mm	5.3	6.3	7
Pull down movement (standard)	mm	0.1	0.1	0.1
Axial piston stroke	mm	21	25	25
Max. draw pull**	kN	18	25	40
Max. gripping force at distance **h****	kN	44	60	96
Max. speed*	r.p.m.	4250	3750	3000
Weight (without top jaws)	kg	25	40	67
Moment of inertia	kg·m²	0.165	0.32	0.75
Recommended actuating cylinders	**Type**	**SIN-S 85**	**SIN-S 100**	**SIN-S 125**

* The above maximum speed is allowed with standard weight/height top jaws and applying the full draw pull only. For more informations please contact SMW-AUTOBLOK.
**For internal clamping reduce the draw pull by 30 %.

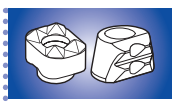

SMW-AUTOBLOK 400

SMW-AUTOBLOK 394

SMW-AUTOBLOK 259

High precision pull-down chucks Ø 220 - 330 mm

- Active pull-down
- Tongue & groove
- Large through hole
- 3 jaws

TSBF-C

Self centering
Floating jaws

TSBR-C

Self centering
Rigid jaws

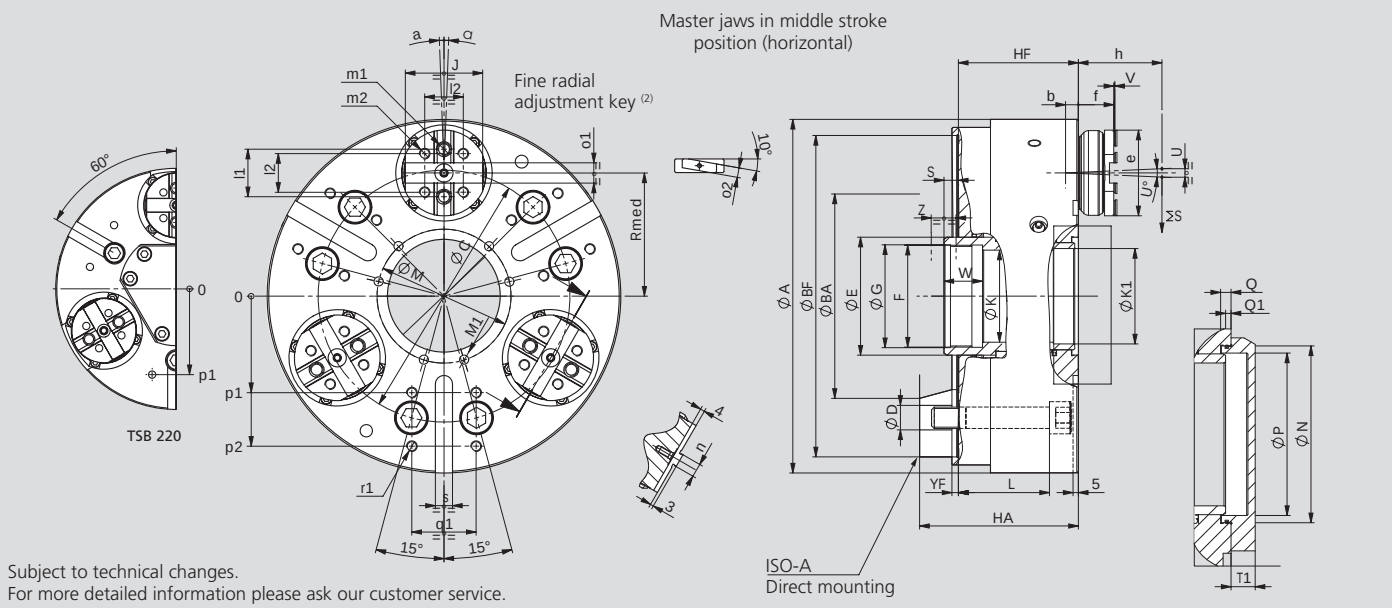

SMW-AUTOBLOK Type			TSBF-C 220 TSBR-C 220		TSBF-C 260 TSBR-C 260		TSBF-C 330 TSBR-C 330	
Mounting			Z170	A6	Z220	A8	Z300	A11
	A	mm	225		265		330	
	BF/BA H6	mm	170	106.375	220	139.719	300	196.869
	C	mm	133.4		171.4		235	
	D	mm	13.5		17		21	
	E	mm	75		85		110	
	F	mm	M65 x 2		M75 x 2		M95 x 2	
	G H8	mm	66		76		96	
	HF/HA	mm	86	103	100	119	112	133
Through-hole	K	mm	55		62		86	
	K1	mm	-		65		89	
	L	mm	66		80		85	
	M	mm	88		100		125	
Thread/depth	M1	mm	M8/20		M8/20		M10/20	
	N H8	mm	74		85		110	
	P	mm	65		75		100	
	Q	mm	6.5		6.5		6.5	
At middle stroke	Q1	mm	2		1		3	
At middle stroke	Rmed	mm	78		90		115	
At middle stroke	S	mm	15		13		14	
	T1	mm	13		16		15	
Radial stroke	U°	deg.	5.2°		5.2°		5°	
Radial stroke (1)	U	mm	5.3		6.3		7	
Pull-down s/d (option)	V	mm	0.1 (0.6)		0.1 (0.6)		0.1 (0.6)	
	W	mm	30		34		36	
Axial wedge stroke	Z	mm	21		25		25	
Only TSBF-C max.	α	deg.	±2°		±2°		±1.5°	
	b	mm	9		10		12	
	e	mm	60		75		80	
	f	mm	27		33		33	
Reference height	h	mm	50		60		70	
	j	mm	55		65		72	
	l1	mm	32		38		44.4	
	l2	mm	24		32		36	
Thread/depth	m1	mm	M10/16		M12/18		M12/18	
Thread/depth	m2	mm	M8/14		M10/14		M10/14	
	n h8	mm	7.94		7.94		12.7	
	o1 H7	mm	12.68		12.68		19.03	
	o2 h7	mm	9		9		12	
	p1	mm	80		102		90	
	p2	mm	-		-		140	
	q1	mm	45		60		60	
Thread/depth	r1	mm	M8/15		M10/20		M10/20	
	s	mm	16		16		16	
	yF	mm	5		5		5	

(1) Calculated at **h** distance from the chuck's face (where normally the clamping takes place)
(2) SMW-AUTOBLOK 164: General catalog

TSBF-CP

Compensating
Floating jaws

TSBR-CP

Compensating
Rigid jaws

Compensating pull-down chucks Ø 220 - 330 mm

- Active pull-down
- Tongue & groove
- Large through hole
- 3 jaws

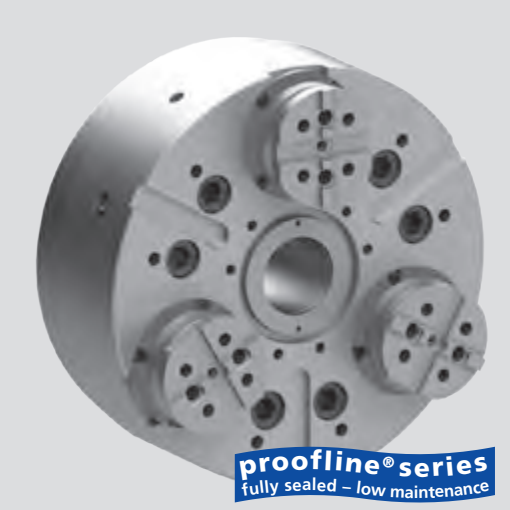

Application/customer benefits

- Clamping of shafts or chuck parts where the reference is not the O.D. but a center or a centering dia.
- A center point or a centering insert will center the workpieces and the jaws will clamp compensating and actively pull the workpiece down to the datum
- Through hole to insert long workpieces or for special clamping applications

TSBF-CP: Compensating clamping with active pull down and floating base jaws
TSBR-CP: Compensating clamping with active pull down and rigid base jaws

Technical features

- Active pull-down
- Compensating clamping
- Centrifugal force compensation
- Large through hole
- TONGUE & GROOVE base jaws
- Permanent grease lubrication
- **proofline® chucks** = fully sealed – low maintenance

Standard equipment

3-jaw chuck
Mounting bolts

Ordering example

TSBF-CP 220/A6
or TSBR-CP 330/Z300

TSBF-CP/TSBR-CP

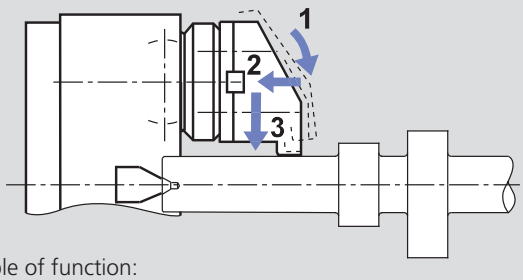

Principle of function:
- **1** compensating pre-clamping - **2** active pull-down - **3** clamping

TSBF-CP/TSBR-CP

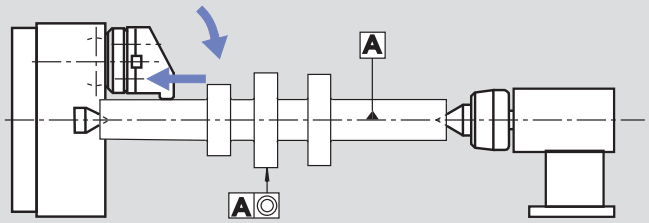

- The workpiece is actively pulled down to the center point. The tailstock just supplies the necessary force to support the workpiece. The result is an exact cylindrical and straight workpiece.

Non active pull down compensating chuck

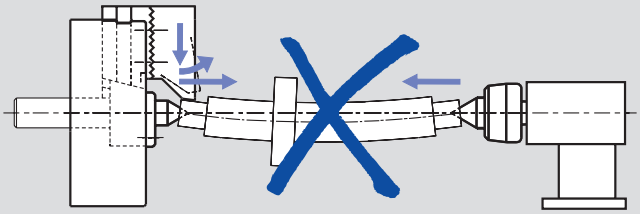

- The workpiece is lifted by the jaws from the center point. When a higher tailstock force is applied for compensation, the workpiece will be bent.

TSBF-CP

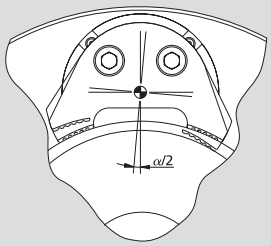

Floating jaws

TSBR-CP

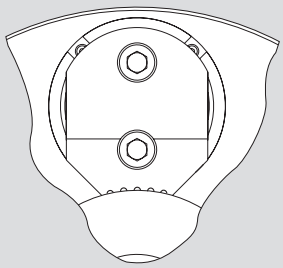

Rigid jaws

Technical data

SMW-AUTOBLOK Type		TSBF-CP 220 TSBR-CP 220	TSBF-CP 260 TSBR-CP 260	TSBF-CP 330 TSBR-CP 330
Angular jaw stroke U°	deg.	5.2°	5.2°	5°
Radial jaw stroke at distance **h**	mm	5.3	6.3	7
Pull down movement (standard)	mm	0.1	0.1	0.1
Axial piston stroke	mm	21	25	25
Compensation (on the dia.) at distance **h**	mm	±1.5	±1.5	±2.5
Max. draw pull**	kN	18	25	40
Max. gripping force at distance **h****	kN	44	60	96
Max. speed*	r.p.m.	4250	3750	3000
Weight (plain back without top jaws)	kg	25	40	67
Moment of inertia	kg·m²	0.165	0.32	0.75
Recommended actuating cylinders	**Type**	**SIN-S 85**	**SIN-S 100**	**SIN-S 125**

* The above maximum speed is allowed with standard weight/height top jaws and applying the full draw pull only. For more informations please contact SMW-AUTOBLOK.
**For internal clamping reduce the draw pull by 30 %.

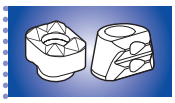

SMW-AUTOBLOK 400

SMW-AUTOBLOK 394

SMW-AUTOBLOK 259

Compensating pull-down chucks Ø 220 - 330 mm

- Active pull-down
- Tongue & groove
- Large through hole
- 3 jaws

TSBF-CP
Compensating
Floating jaws

TSBR-CP
Compensating
Rigid jaws

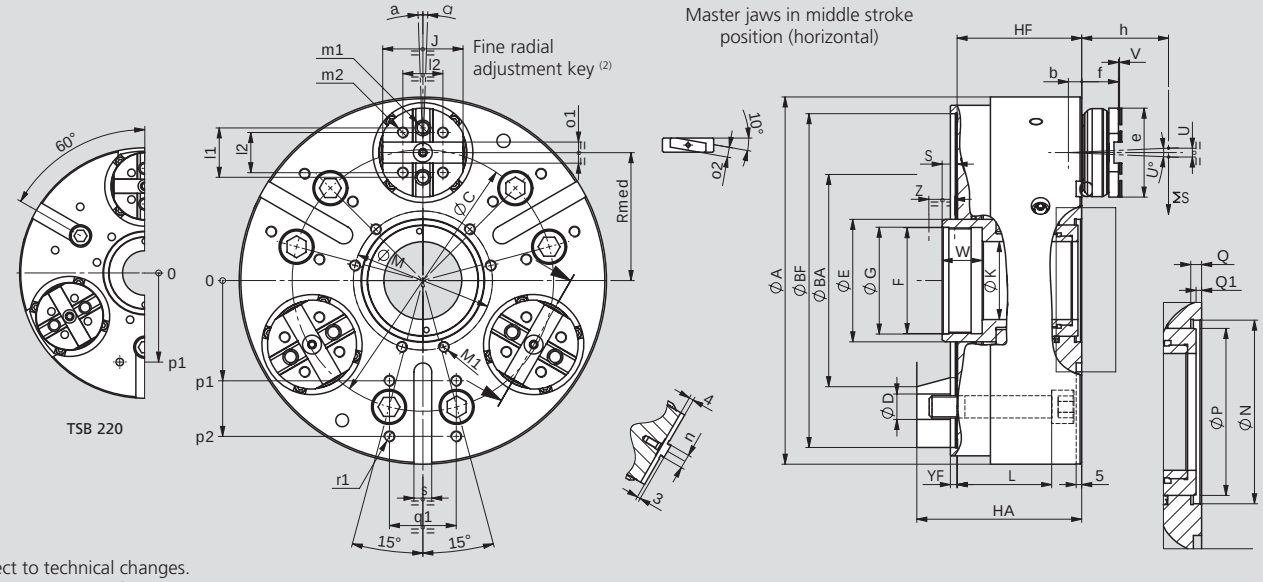

Subject to technical changes.
For more detailed information please ask our customer service.

SMW-AUTOBLOK Type			TSBF-CP 220 TSBR-CP 220		TSBF-CP 260 TSBR-CP 260		TSBF-CP 330 TSBR-CP 330	
Mounting			Z170	A6	Z220	A8	Z300	A11
	A	mm	225		265		330	
	BF/BA H6	mm	170	106.375	220	139.719	300	196.869
	C	mm	133.4		171.4		235	
	D	mm	13.5		17		21	
	E	mm	75		85		110	
	F	mm	M65 x 2		M75 x 2		M95 x 2	
	G H8	mm	66		76		96	
	HF/HA	mm	86	103	100	119	112	133
Through-hole	K	mm	40		50		70	
	L	mm	66		80		85	
	M	mm	88		100		125	
Thread/depth	M1	mm	M8/20		M8/20		M10/20	
	N H8	mm	74		85		110	
	P	mm	65		75		100	
	Q	mm	6.5		6.5		6.5	
At middle stroke	Q1	mm	2		1		3	
At middle stroke	Rmed	mm	78		90		115	
At middle stroke	S	mm	15		13		14	
Radial stroke	U°	deg.	5.2°		5.2°		5°	
Radial stroke (1)	U	mm	5.3		6.3		7	
Pull-down s/d (opt.)	V	mm	0.1 (0.6)		0.1 (0.6)		0.1 (0.6)	
	W	mm	30		34		36	
Axial piston stroke	Z	mm	21		25		25	
Only TSBF-CP max.	α	deg.	±2°		±2°		±1.5°	
	b	mm	9		10		12	
	e	mm	60		75		80	
	f	mm	27		33		33	
Reference height	h	mm	50		60		70	
	j	mm	55		65		72	
	l1	mm	32		38		44.4	
	l2	mm	24		32		36	
Thread/depth	m1	mm	M10/16		M12/18		M12/18	
Thread/depth	m2	mm	M8/14		M10/14		M10/14	
	n h8	mm	7.94		7.94		12.7	
	o1 H7	mm	12.68		12.68		19.03	
	o2 h7	mm	9		9		12	
	p1	mm	80		102		90	
	p2	mm	-		-		140	
	q1	mm	45		60		60	
Thread/depth	r1	mm	M8/15		M10/20		M10/20	
	s	mm	16		16		16	
	YF	mm	5		5		5	

(1) Calculated at **h** distance from the chuck's face (where normally the clamping takes place).
(2) SMW-AUTOBLOK 164: General catalog

Accessories for TS chucks

■ Quick jaw change pallets
■ Cross keys for top jaws fine adjustment

Quick change pallets for **TSF-RM** and **TSR-RM** chucks

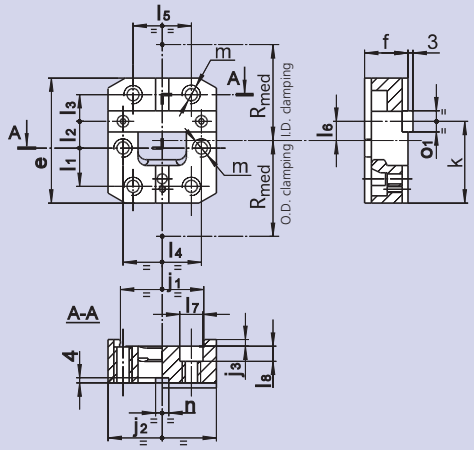

Chuck type		TSF-RM 170 TSR-RM 170	TSF-RM 210 TSR-RM 210	TSF-RM 250 TSR-RM 250	TSF-RM 315 TSR-RM 315	TSF-RM 400/530 TSR-RM 400/530
Id. No.		19701716	19702116	19702516	19702516	19704016
e	mm	60	75	80	80	105
f	mm	21.5	26	28	28	34
j_1	mm	44	50	55	55	80
j_2	mm	55	65	72	72	100
j_3	mm	3.5	4	4	4	4
k	mm	39.5	49	51	51	66.5
l_1	mm	19	23	22	22	28
l_2	mm	12.5	16	19	19	25
l_3	mm	12.5	16	19	19	25
l_4	mm	42	47	52	52	74
l_5	mm	32	35	40	40	62
l_6	mm	9.5	11.5	11	11	14
l_7	mm	11	14	14	14	17
l_8	mm	7	9	9	9	11
m	mm	M8	M10	M10	M10	M12
n (H7)	mm	7.94	7.94	12.7	12.7	12.7
o_1 (h7)	mm	12.68	12.68	19.03	19.03	19.03
R_{med}	mm	55	64	82	107	130

Cross keys for jaw radial fine adjustment

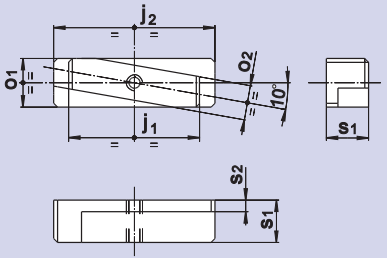

- Inclined key for radial fine adjustment of the top jaws, used when high concentricity for second operations is required.
- Used in second operation and sometimes in first or unique operations.

Chuck Ø		170	210	250	315	400/530/650
Id. No.		15711633	15712133	15712533	15712533	15714033
j_1	mm	24	32	38	38	46
j_2	mm	38	46	56	56	70
o_1 (h7)	mm	12.68	12.68	19.03	19.03	19.03
o_2 (h7)	mm	9	9	12	12	12
s_1	mm	11	11	11	11	14.5
s_2	mm	3	3	3	3	4.5

Brake drum – 1st operation clamping

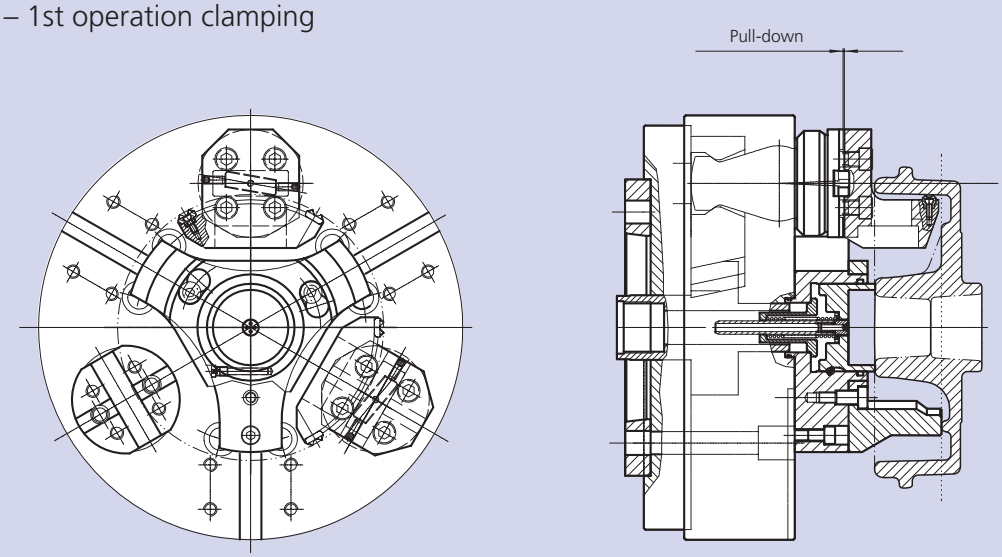

Bearing ring – 2nd operation clamping

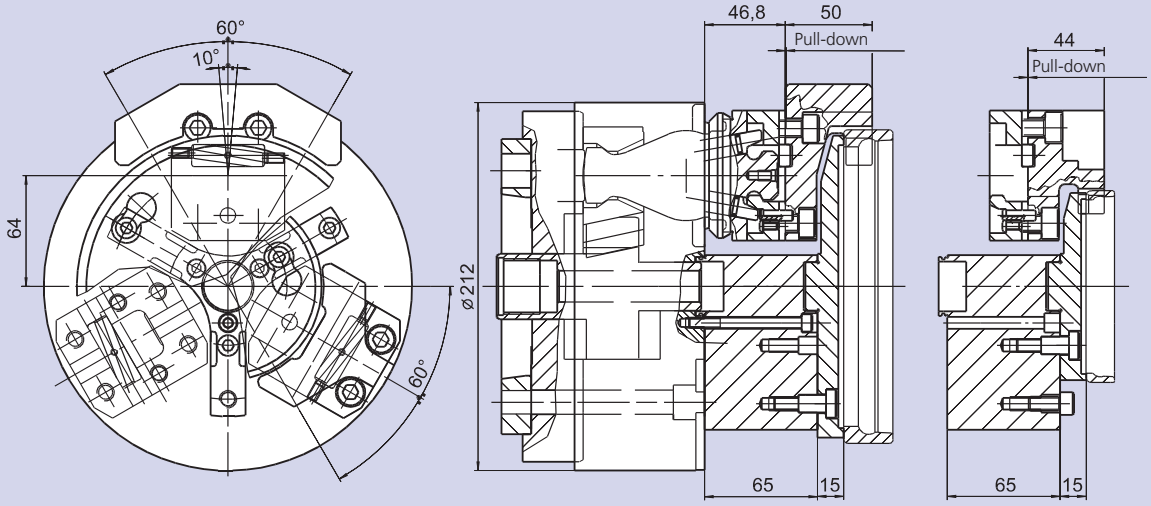

Bearing flange – Complete machining in one set-up

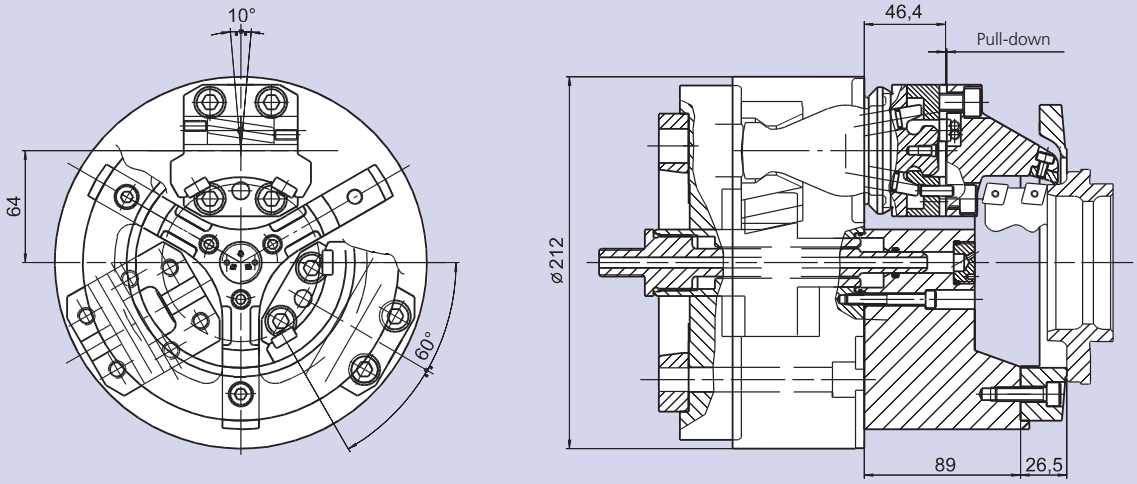

FRC-N

Compensating clamping
TONGUE & GROOVE

Lever chuck Ø 215 - 365 mm

- Pull-down to axial datum
- Spring loaded or fixed center
- proofline® chucks = fully sealed - low maintenance

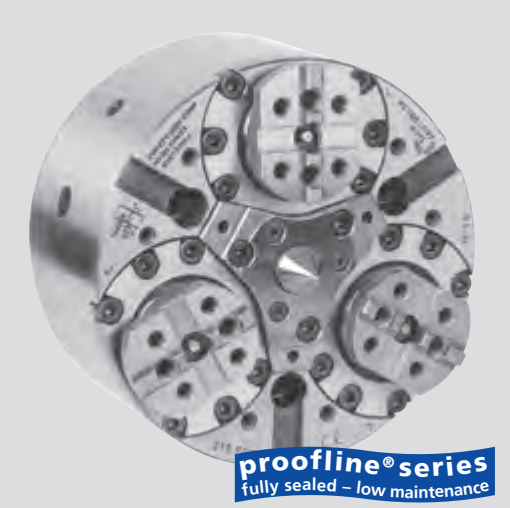

Application/customer benefits

- Compensating clamping of shafts between centers, where the clamping diameter is not concentric to the workpiece axis
- The grip force of the chuck supplies the torque necessary to machine the workpiece and pulls it down to the axial datum (center point/axial stop)
- Due to its high rigidity against torsion the chuck is ideal for turning as well as for milling operations

Technical features

- For O.D. clamping only
- Compensating clamping with large compensating stroke
- TONGUE & GROOVE base jaws
- Pull down to axial datum
- Centrifugal force compensation
- Permanent grease lubrication
- High rigidity against torsion
- Center point adjustable
- **proofline® chucks**
  = fully sealed - low maintenance

Standard equipment

3-jaw chuck without centering insert
Mounting bolts

Ordering example

Chuck FRC-N 215 A6

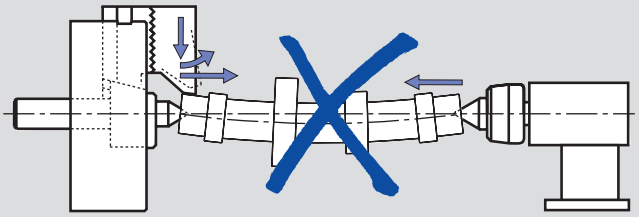

- **Non pull-down compensating chuck**
  Lifting of the top jaws pushes the shaft away from the centering reference; high tailstock force has to be used to overcome this lifting, resulting in a bending of the component.

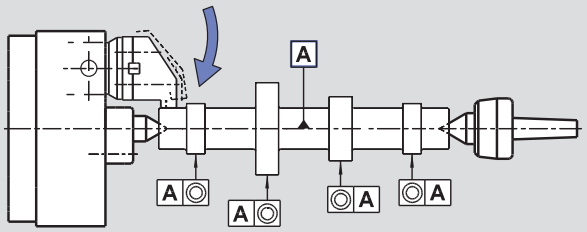

- **FRC-N pull-down and compensating clamping**
  The tailstock supplies the requested force to support the part only. The result is a cylindrical finished shaft with concentric diameters. The chuck pulls the workpiece down to the center point without bending the workpiece.

Technical data

SMW-AUTOBLOK Type		FRC-N 215	FRC-N 285	FRC-N 365
Angular jaw stroke U°	deg.	6°	6°	6°
Radial jaw stroke at distance **h**	mm	6.3	7.3	8.4
Wedge stroke	mm	22	26	31
Compensation (on the dia.) at distance **h**	mm	±1.5	±2	±2.5
Max. draw pull	kN	45	70	110
Max. gripping force at distance **h**	kN	100	150	240
Max. speed	r.p.m.	4500	3500	2500
Weight (plain back without top jaws)	kg	30	62	120
Moment of inertia*	kg·m²	0.17	0.65	2
Standard fixed center	Id. No.	81732141	81732841	81733641
Standard spring loaded center	Id. No.	81722141	81722841	81723641
Recommended actuating cylinders	**Type**	**SIN-S 100 - 125**	**125 SIN-S 125 -150**	**SIN-S 150 - 200**

* The above maximum speed is allowed with standard weight/height top jaws and applying the full draw pull only. For more informations please contact SMW-AUTOBLOK.

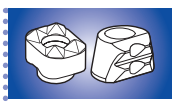
SMW-AUTOBLOK 400

SMW-AUTOBLOK 394

SMW-AUTOBLOK 259

Lever chuck Ø 215 - 365 mm

- Pull-down to axial datum
- Spring loaded or fixed center
- proofline® chucks = fully sealed - low maintenance

FRC-N

Compensating clamping
TONGUE & GROOVE

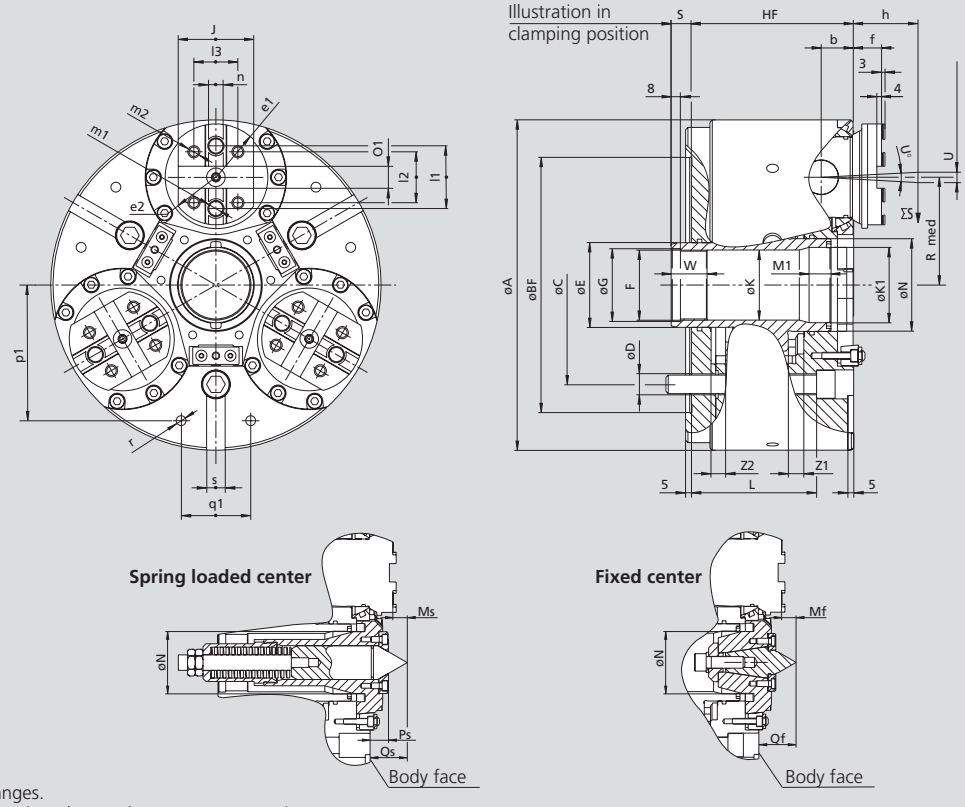

Subject to technical changes.
For more detailed information please ask our customer service.

SMW-AUTOBLOK Type			FRC-N 215	FRC-N 285	FRC-N 365
	A	mm	215	285	365
	BF H6	mm	170	220	300
	C	mm	133.4	171.4	235
	D	mm	13.5	17	21
	E	mm	50	73	79
	F	mm	M42 x 1.5	M60 x 1.5	M68 x 2
	G H8	mm	43	61	69
	HF	mm	120	140	168
Through-hole	**K**	mm	40	57	60.5
	Ø K1/ depth M1	mm	40	62/45	75/23.8
	L	mm	95	108	123
	N H8	mm	52	80	90
	Mf	mm	14.5	14.6	21.7
	Qf	mm	32.5	38.6	42.7
	Ms	mm	13.8	14.4	19.9
	Ps	mm	21	19	21.5
	Qs	mm	31.8	38.4	40.9
	Rmed	mm	67	93	120
At middle stroke - clamping position	**S**	mm	15.4	17.5	24.8
Min./max.	**S**	mm	4/26	4/30	9/40
Angular jaw movement	**U°**	deg.	6°	6°	6°
Radial stroke at distance **h** (1)	**U**	mm	6.3	7.3	8.4
	W	mm	30	31	30
	Z1	mm	11.4	13.5	15.8
	Z2	mm	10.6	12.5	15.2
	b	mm	22	28	34
	e1	mm	37.5	46	50
	e2	mm	33	41	50
	f	mm	18	24	21
Reference height	**h**	mm	38	42	46
	j	mm	55	65	70
	l1	mm	38	54	63.5
	l2	mm	32	44	48
	l3	mm	32	38	48
Thread/depth	**m1**	mm	M12/16	M16/20	M16/20
Thread/depth	**m2**	mm	M10/14	M12/19	M12/19
	n h8	mm	7.94	12.7	12.7
	o1 H7	mm	12.68	19.03	19.03
	p1	mm	80	117	150
	q1	mm	45	60	80
Thread/depth	**r**	mm	M8/17	M10/19	M12/22
	s H8	mm	16	16	20

(1) Calculated at **h** distance from the chuck's face (where normally the clamping takes place).

FRS

Self centering clamping
TONGUE & GROOVE

Lever chuck Ø 215 - 365 mm

- **Self centering clamping**
- **Large through hole**
- **proofline® chucks = fully sealed – low maintenance**

Application/customer benefits

- Self centering clamping of flange or shaft type workpieces where the reference is not a center but the O.D. of the workpiece
- The through hole of the chuck allows to swallow the workpiece if needed
- Due to its high rigidity against torsion the chuck can be used for turning as well as for milling

Technical features

- For O.D. clamping only
- Large through hole
- TONGUE & GROOVE base jaws
- Pull-down to axial datum
- Permanent grease lubrication
- Rigid design against torsion
- **proofline® chucks**
  = fully sealed - low maintenance

Standard equipment

3-jaw chuck
Mounting bolts

Ordering example

3-jaw chuck FRS 285 Z 220

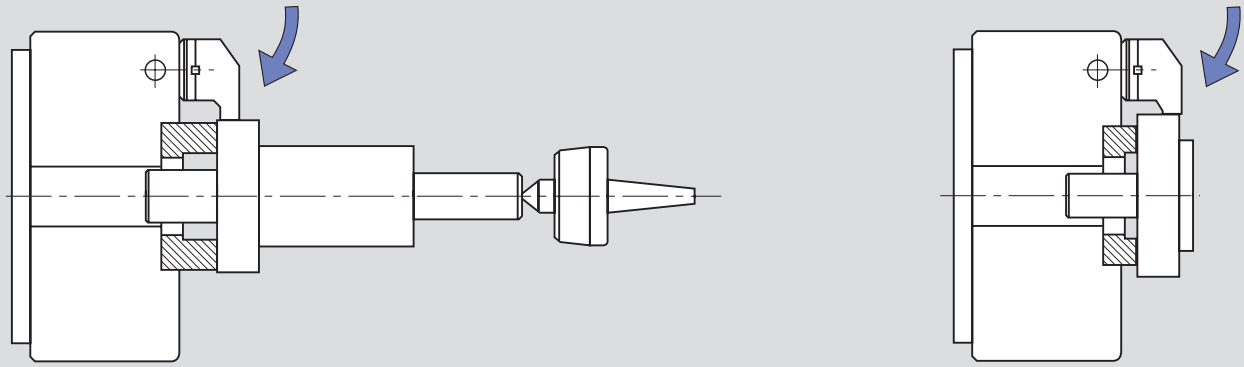

- **FRS self centering chuck with pull-down**
  The pull-down of the chuck pulls the workpiece against the workstop.
  The large bore allows the workpiece to be swallowed.

Technical data

SMW-AUTOBLOK Type		FRS 215	FRS 285	FRS 365
Angular jaw stroke	deg.	6°	6°	6°
Radial jaw stroke at distance **h**	mm	6.3	7.3	8.4
Wedge stroke	mm	22	26	31
Max. draw pull	kN	45	70	110
Max. gripping force at distance **h**	kN	100	150	240
Max. speed*	r.p.m.	4500	3500	2500
Weight (plain back without top jaws)	kg	30	62	120
Moment of inertia	kg·m²	0.17	0.65	2
Recommended actuating cylinders	**Type**	**SIN-S 100 - 125**	**SIN-S 125 - 150**	**SIN-S 150 - 200**

* The above maximum speed is allowed with standard weight/height top jaws and applying the full draw pull only. For more informations please contact SMW-AUTOBLOK.

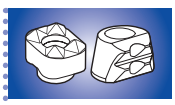
SMW-AUTOBLOK 400

SMW-AUTOBLOK 394

SMW-AUTOBLOK 259

Lever chuck Ø 215 - 365 mm

- Self centering clamping
- Large through hole
- proofline® chucks = fully sealed – low maintenance

FRS

Self centering clamping
TONGUE & GROOVE

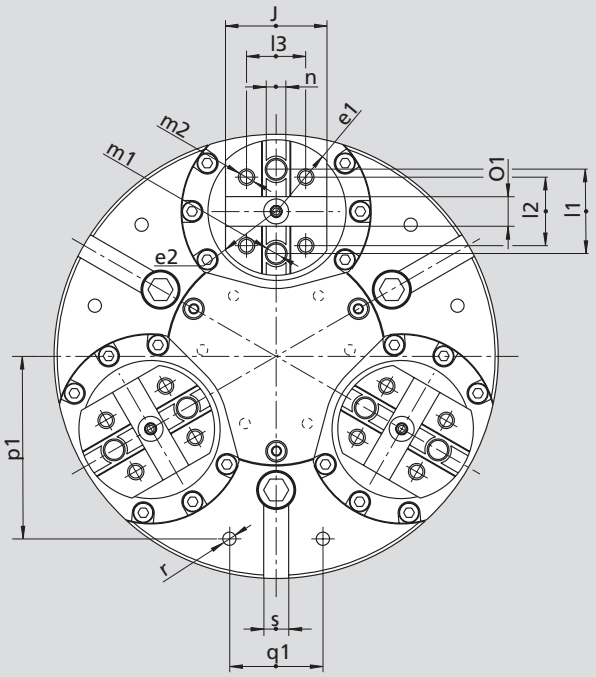

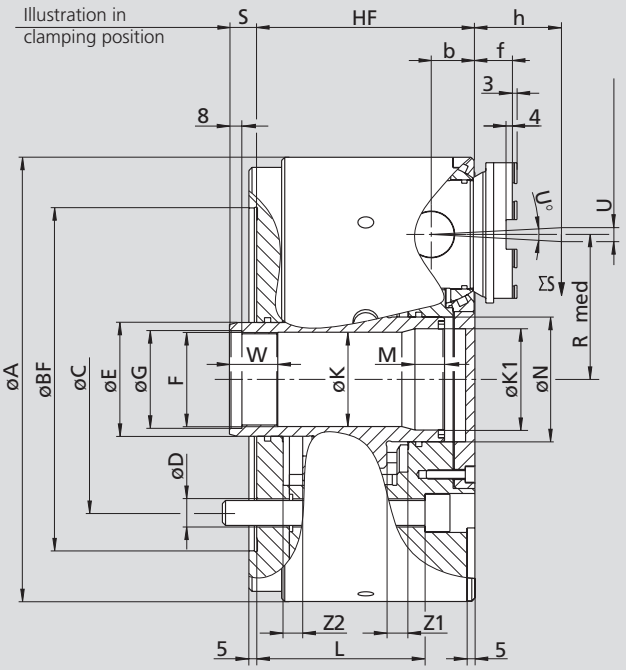

Subject to technical changes.
For more detailed information please ask our customer service.

SMW-AUTOBLOK Type			FRS 215	FRS 285	FRS 365
	A	mm	215	285	365
	BF H6	mm	170	220	300
	C	mm	133.4	171.4	235
	D	mm	M12	M16	M20
	E	mm	50	73	79
	F	mm	M42 x 1.5	M60 x 1.5	M68 x 2
	G H8	mm	43	61	69
	HF	mm	120	140	168
Through-hole	**K**	mm	40	60.5	60.5
	K1	mm	-	65	75
	L	mm	95	108	123
	M	mm	-	19	23.8
	N	mm	52	80	90
	Rmed	mm	67	93	120
At middle stroke - clamping position	**S**	mm	15.4	17.5	24.8
Min./max.	**S**	mm	4/26	4/30	9/40
Angular jaw movement	**U°**	deg.	6°	6°	6°
Radial stroke at distance **h** (1)	**U**	mm	6.3	7.3	8.4
	W	mm	30	31	30
	Z1	mm	11.4	13.5	15.8
	Z2	mm	10.6	12.5	15.2
	b	mm	22	28	34
	e1	mm	37.5	46	50
	e2	mm	33	41	50
	f	mm	18	24	21
Reference height	**h**	mm	38	42	46
	j	mm	55	65	70
	l1	mm	38	54	63.5
	l2	mm	32	44	48
	l3	mm	32	38	48
Thread/depth	**m1**	mm	M12/16	M16/20	M16/20
Thread/depth	**m2**	mm	M10/14	M12/19	M12/19
	n h8	mm	7.94	12.7	12.7
	o1 H7	mm	12.68	19.03	19.03
	p1	mm	80	117	150
	q1	mm	45	60	80
Thread/depth	**r**	mm	M8/17	M10/19	M12/22
	s H8	mm	16	16	20

(1) Calculated at **h** distance from the chuck's face (where normally the clamping takes place).

TPT-C

2+2 independent jaw movement
TONGUE & GROOVE

High precision 2+2 jaw power chuck with self-centering independent jaw movement Ø 210 - 400 mm

- Closed center
- Tongue & groove

Application/customer benefits

- Clamping of rectangular and square workpieces, self-centering in two axes

Technical features

- 2+2 jaw chuck with 2 independent self-centering jaw drives (two wedge drives)
- Jaw No. 1 + 3 (clamping jaws): power operated
- Jaw No. 2 + 4 (centering jaws): spring operated or optionally power operated
- Chuck body and internal parts are case hardened for high precision and long life

Standard equipment*

2+2 jaw chuck
Mounting bolts

Ordering example

Power chuck TPT-C 250 A8 or
TPT-C 400-Z

A One wedge drive

- Operated by standard closed center cylinders.
- Jaws 2 and 4 are spring operated to center the component in one axis.
- Jaws 1 and 3 are power operated by the cylinder to center the component on the second axis and to apply the gripping force to drive the component.
- Only for external clamping (on request internal clamping)
- See specific draw pull, gripping force and maximum speed in the technical data table below.

B Two independent wedge drives*

- Operated by independent double piston cylinders.
- Jaws 2 and 4 are power operated (using the small cylinder) to center the component in one axis.
- Jaws 1 and 3 are also power operated (using the large cylinder) to center the component on the second axis and to apply the gripping force to drive the component.
- Since both pair of jaws are power operated the chuck can reach higher speeds.
- See specific draw pull, gripping force and maximum speed in the technical data table below.

***Note:** **The chucks are always delivered as „one wedge drive" version: To use them as „two independent wedge drives" version, just remove the internal „spring assembly" according to instruction manual.**

Technical data

SMW-AUTOBLOK Type Number of jaws		TPT-C 210 2+2	TPT-C 250 2+2	TPT-C 315 2+2	TPT-C 400 2+2
Radial jaw stroke	mm	4	5	5	7
Wedge stroke	mm	19	24	24	33
Weight (plain back without top jaws)	kg	21	32	48	102
Moment of inertia	kg·m²	0.12	0.27	0.64	1.95

A ONE wedge drive

SMW-AUTOBLOK Type Number of jaws		TPT-C 210 2+2	TPT-C 250 2+2	TPT-C 315 2+2	TPT-C 400 2+2
Max. draw pull (clamping wedge, jaw 1 + 3)	kN	29	39	45	60
Max. gripping force jaw 1 + 3* (power operated)	kN	72	98	115	150
Max. centering force jaw 2 + 4 (spring operated)	kN	11	15	15	24
Max. speed	r.p.m.	2500	2400	2000	1500
Recommended actuating cylinders	**Type**	**SIN-S 125**	**SIN-S 125**	**SIN-S 150**	**SIN-S 150**

B TWO independent wedge drives

SMW-AUTOBLOK Type Number of jaws		TPT-C 210 2+2	TPT-C 250 2+2	TPT-C 315 2+2	TPT-C 400 2+2
Max. draw pull (clamping wedge, jaw 1 + 3)	kN	25	34	40	50
Max. draw pull (centering wedge, jaw 2 + 4)	kN	19	25	30	35
Max. gripping force jaw 1 + 3* (power operated)	kN	72	98	115	150
Max. centering force jaw 2 + 4 (power operated)	kN	55	72	85	100
Max. speed	r.p.m.	4300	3400	2700	2000
Recommended actuating cylinders**	**Type**	**DCE 64/64**	**DCE 64/64**	**DCE 64/64**	**DCE 64/64**

* For internal clamping reduce the draw pull by 30 %.
** SMW-AUTOBLOK 272: technical details of DCE cylinders see general catalog

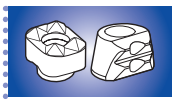

SMW-AUTOBLOK 400

SMW-AUTOBLOK 394

SMW-AUTOBLOK 259

High precision 2+2 jaw power chuck with self-centering independent jaw movement Ø 210 - 400 mm

- Closed center
- Tongue & groove

TPT-C

2+2 independent jaw movement
TONGUE & GROOVE

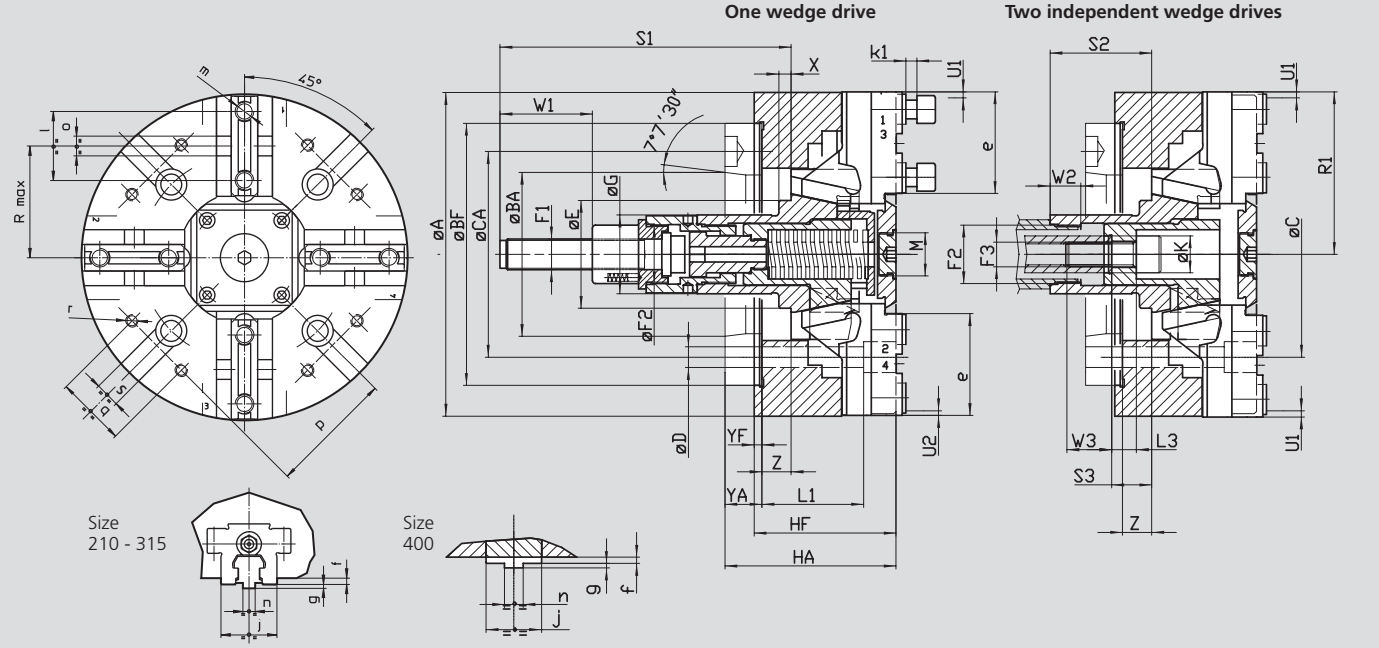

Subject to technical changes.
For more detailed information please ask our customer service.

SMW-AUTOBLOK Type			TPT-C 210		TPT-C 250			TPT-C 315			TPT-C 400	
Mounting			Z170	A6	Z220	A6*	A8	Z300	A8*	A11	Z300	A11
	A	mm	210		254			315			390	
	BF/BA H6	mm	170	106.375	220	106.375	139.719	300	139.719	196.869	300	196.869
	C	mm	133.4		171.4	-	171.4	235	-	235	235	
	CA	mm	-	-	-	133.4	-	-	171.4	-	-	-
	D	mm	13.5		17	13.5	17	21	17	21	21	
	E	mm	70		88			110			98	
	F1	mm	M20		M24			M24			M24	
	F2	mm	M38 x 1.5		M56 x 2			M56 x 2			M56 x 2	
	F3	mm	M16		M20			M20			M20	
	G	mm	51		61			61			70	
Chuck height	HF/HA	mm	92	111	105	124	127	111	127	136	116	140
	K H8	mm	24		30			30			35	
	L1	mm	66		59			33			54	
	L3	mm	11		9			11			11	
	M	mm	M28 x 1.5		M28 x 1.5			M28 x 1.5			M24 x 1	
	R1	mm	105.5		127.5			158			196	
	Rmax	mm	72		88			105			133.5	
	S1	mm	189		203			201			218	
	S2	mm	61		71			69			86	
	S3	mm	21		33			31			45.5	
Jaw stroke (power 1 + 3)	U1	mm	4		5			5			7	
Jaw stroke (power/ spring 2 + 4)	U2	mm	3		4			4			5.4	
	W1	mm	60		60			60			60	
	W2	mm	20		20			20			20	
	W3	mm	29		31			29			29	
	X	mm	8		8			10			10	
	YF/YA	mm	5	24	5	24	27	5	30	30	6	30
Wedge stroke	Z	mm	19		24			24			33	
	e	mm	66		77.5			93			116	
	f	mm	4		4			4			7	
	g	mm	2.5		3			3			3	
	j	mm	36		45			45			62	
	k1	mm	11		12			12			14	
	l	mm	44.4		54			54			76.2	
	m	mm	M12		M16			M16			M20	
	n h8	mm	7.94		12.7			12.7			12.7	
	o H7	mm	12.68		19.03			19.03			19.03	
	p	mm	80		102			100			150	
	q	mm	45		60			60			80	
	r	mm	M8		M10			M10			M12	
	s H8	mm	16		16			20			20	
	t	mm	5		5			5			5	

* Indirect mounting

TPT-C

2+2 independent jaw movement
TONGUE & GROOVE

High precision 2+2 jaw power chuck with self-centering independent jaw movement Ø 500 - 800 mm

- Closed center
- Tongue & groove

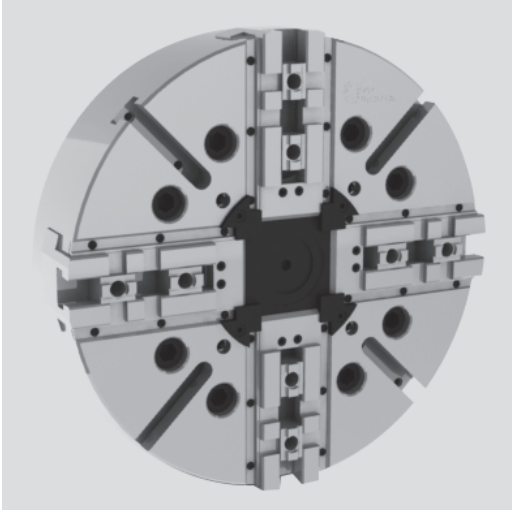

Application/customer benefits

- Clamping of rectangular and square workpieces, self-centering in two axes

Technical features

- 2+2 jaw chuck with 2 independent self-centering jaw drives (two wedge drives)
- Jaw No. 1 + 3 (clamping jaws): power operated
- Jaw No. 2 + 4 (centering jaws): spring operated or optionally power operated*
- High quality cast iron body for lightweight and durability
- Protection from contamination with seals along the master jaw profiles

Standard equipment

2+2 jaw chuck
1 set of T-nuts and bolts
1 set of soft top jaws
Mounting bolts

Ordering example

Power chuck TPT-C 500 2+2 Z380
or
Power chuck TPT-C 800 2+2 A15

A One wedge drive

- Operated by standard closed center cylinders.
- Jaws 2 and 4 are spring operated to center the component in one axis.
- Jaws 1 and 3 are power operated by the cylinder to center the component on the second axis and to apply the gripping force to drive the component.
- Only for external clamping (on request internal clamping)
- See specific draw pull, gripping force and maximum speed in the technical data table below.

B Two independent wedge drives*

- Operated by independent double piston cylinders.
- Jaws 2 and 4 are power operated (using the small cylinder) to center the component in one axis.
- Jaws 1 and 3 are also power operated (using the large cylinder) to center the component on the second axis and to apply the gripping force to drive the component.
- Since both pair of jaws are power operated the chuck can reach higher speeds.
- See specific draw pull, gripping force and maximum speed in the technical data table below.

***Note: The chucks are always delivered as „one wedge drive“ version: To use them as „two independent wedge drives“ version, just remove the internal „spring assembly“ according to instruction manual.**

Technical data

SMW-AUTOBLOK Type Number of jaws		TPT-C 500 2+2	TPT-C 630 2+2	TPT-C 800 2+2
Radial jaw stroke	mm	8.5	10	10
Wedge stroke	mm	32	38	38
Weight (plain back without top jaws)	kg	180	325	550
Moment of inertia	kg·m²	6	16	44

A ONE wedge drive

SMW-AUTOBLOK Type Number of jaws		TPT-C 500 2+2	TPT-C 630 2+2	TPT-C 800 2+2
Max. draw pull (clamping wedge, jaw 1 + 3)	kN	80	80	80
Max. gripping force jaw 1 + 3* (power operated)	kN	160	160	160
Max. centering force jaw 2 + 4 (spring operated)	kN	30	30	30
Max. speed	r.p.m.	800	630	500
Recommended actuating cylinders	**Type**	**SIN-S 175-200**	**SIN-S 175-200**	**SIN-S 175-200**

B TWO independent wedge drives

SMW-AUTOBLOK Type Number of jaws		TPT-C 500 2+2	TPT-C 630 2+2	TPT-C 800 2+2
Max. draw pull* (clamping wedge, jaw 1 + 3)	kN	67	67	67
Max. draw pull* (centering wedge, jaw 2 + 4)	kN	50	50	50
Max. gripping force jaw 1 + 3* (power operated)	kN	160	160	160
Max. centering force jaw 2 + 4 (power operated)	kN	120	120	120
Max. speed	r.p.m.	1200	850	700
Recommended actuating cylinders**	**Type**	**DCE 140/140**	**DCE 140/140**	**DCE 140/140**

* For internal clamping reduce the draw pull by 30 %.
** SMW-AUTOBLOK 272: technical details of DCE cylinders see general catalog

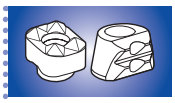
SMW-AUTOBLOK 400

SMW-AUTOBLOK 394

SMW-AUTOBLOK 259

High precision 2+2 jaw power chuck with self-centering independent jaw movement Ø 500 - 800 mm

- Closed center
- Tongue & groove

TPT-C

2+2 independent jaw movement
TONGUE & GROOVE

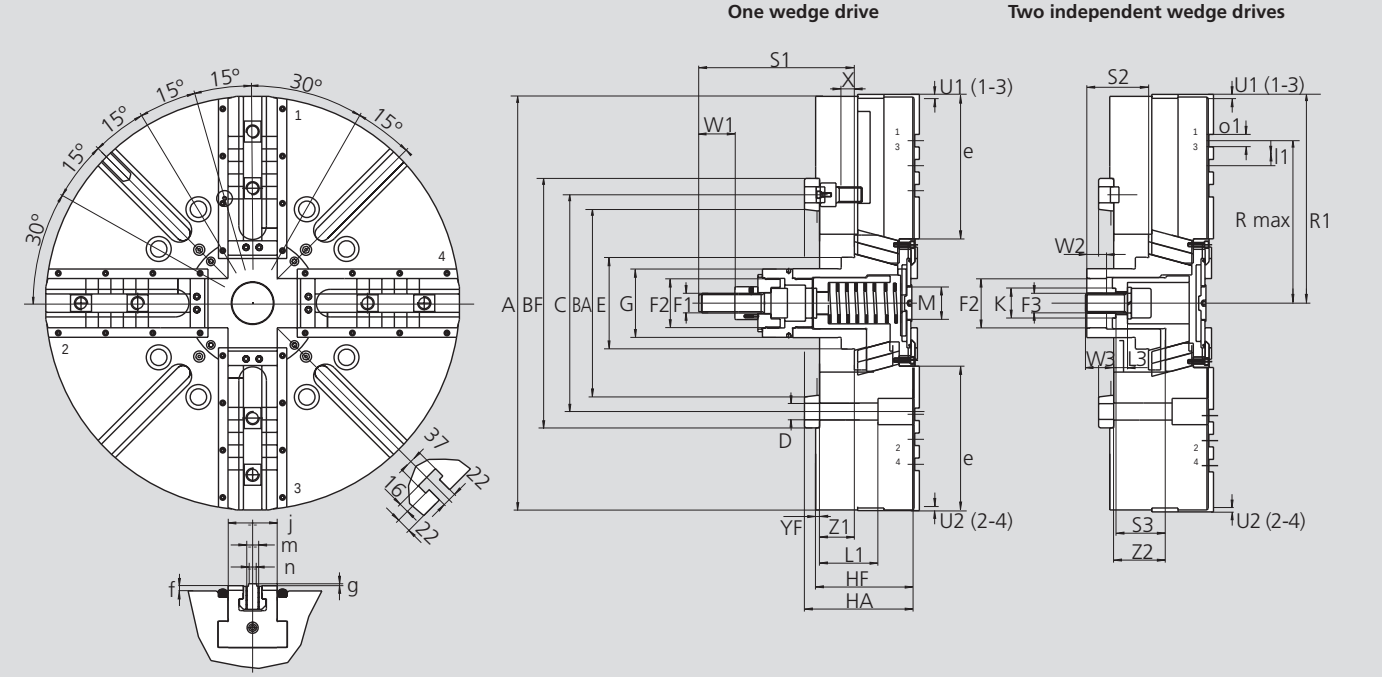

Subject to technical changes.
For more detailed information please ask our customer service.

SMW-AUTOBLOK Type			TPT-C 500		TPT-C 630		TPT-C 800	
Mounting			Z380	A15	Z380	A15	Z380	A15
	A	mm	510		630		800	
	B_F/B_A H6	mm	380	285.775	380	285.775	380	285.775
	C	mm	330.2		330.2		330.2	
	D	mm	25		25		25	
	E	mm	140		140		140	
	F_1	mm	M30		M30		M30	
	F_2	mm	M75 x 2		M75 x 2		M75 x 2	
	F_3	mm	M30		M30		M30	
	G	mm	104		104		104	
Chuck height	H_F/H_A	mm	130	147	150	167	150	167
	K	mm	45		45		45	
	L_1	mm	89		89		89	
	L_3	mm	18		18		18	
	M	mm	M52 x 1.5		M52 x 1.5		M52 x 1.5	
	R_1	mm	263		318		405	
	R_{max}	mm	209.5		247.5		349	
	S_1	mm	237		237		237	
	S_2	mm	94		94		94	
	S_3	mm	76		76		76	
Jaw stroke (power 1 + 3)	U_1	mm	8.5		10		10	
Jaw stroke (power / spring 2 + 4)	U_2	mm	6.5		8		8	
	W_1	mm	55		55		55	
	W_2	mm	30		30		30	
	W_3	mm	46		46		46	
	X	mm	20		20		20	
	Y_F/Y_A	mm	6/23		6/23		6/23	
Wedge 1 max./min.	Z_1	mm	33/1		53/15		53/15	
Wedge 2 max./min.	Z_2	mm	59/27		79/41		79/41	
	e	mm	165		220		307	
	f	mm	8		8		8	
	g	mm	3		3		3	
	j	mm	75		75		75	
	l_1	mm	38.1		38.1		38.1	
	m	mm	20		20		20	
	n	mm	12.7		12.7		12.7	
	o_1	mm	19.03		19.03		19.03	

TPT-RC

2+2 independent jaw movement
TONGUE & GROOVE
Radial setting of jaws

High precision 2+2 jaw power chuck with self-centering independent jaw movement Ø 1000 - 2000 mm

- **Closed center**
- **Tongue & groove**

Application/customer benefits

- High versatility on large vertical lathes to clamp round, elliptical, irregular, square and rectangular workpieces, self centering in two axes
- External or internal clamping

Technical features

- 2+2 jaw chuck with 2 independent self-centering jaw drives (two wedge drives)
- Jaw No. 1 + 3 (clamping jaws): power operated
- Jaw No. 2 + 4 (centering jaws): power operated
- Internal parts case hardened for high precision and long life
- With manual radial setting of jaws for the workpiece centering
- Protection from contamination with seals along the master jaw profiles
- Possibility to use jaw boxes for manual clamping mounted on the T-slots between the master jaws

Standard equipment

2+2 jaw chuck
1 set of soft top jaws
Mounting bolts

Ordering example

Power chuck TPT-RC 2+2 1000 Z520

Using the double centering it is possible to easily clamp a wide variaty of component shapes: round, square, ring, rectangular, oval and irregular

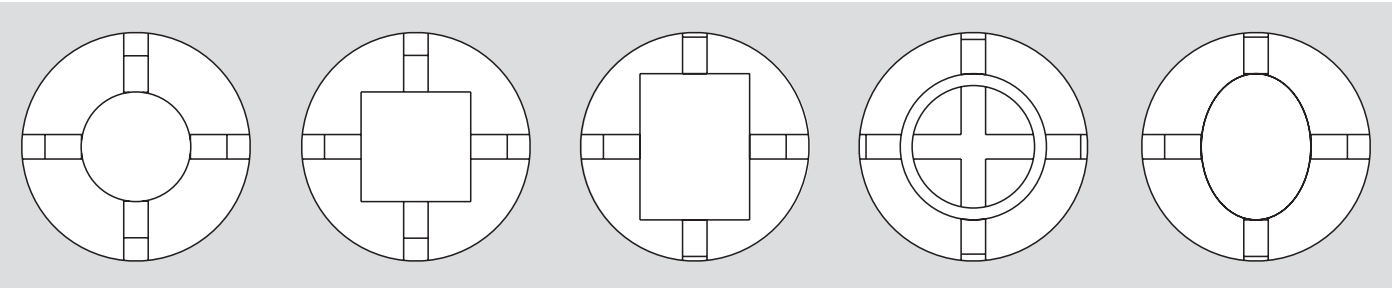

Two independent wedge drives

- Operated by independent double piston cylinders.
- Jaws 2 and 4 are power operated to center the component in one axis and to drive the component.
- Jaws 1 and 3 are power operated to center the component on the second axis and to drive the component.
- Since both pairs of jaws are power operated the chuck can reach high speeds.
- See specific draw pull, gripping force and maximum speed in the technical data table below.

Technical data

SMW-AUTOBLOK Type Number of jaws		TPT-RC 1000 2+2	TPT-RC 1250 2+2	TPT-RC 1400 2+2	TPT-RC 1600 2+2	TPT-RC 2000 2+2
Radial jaw stroke + Radial setting stroke	mm	17 + 30	17 + 30	20 + 40	20 + 40	20 + 40
Wedge stroke	mm	30	30	40	40	40
Weight (plain back without top jaws)	kg	750	940	1460	1800	2760
Moment of inertia	kg·m²	86	180	355	565	1370

TWO independent wedge drives

SMW-AUTOBLOK Type Number of jaws		TPT-RC 1000 2+2	TPT-RC 1250 2+2	TPT-RC 1400 2+2	TPT-RC 1600 2+2	TPT-RC 2000 2+2
Max. draw pull* (wedge 1, jaw 1 + 3)	kN	100	100	130	130	130
Max. draw pull* (wedge 2, jaw 2 + 4)	kN	100	100	130	130	130
Max. gripping force jaw 1 + 3* (power operated)	kN	140	140	190	190	190
Max. centering force jaw 2 + 4 (power operated)	kN	140	140	190	190	190
Max. speed	r.p.m.	550	450	450	400	280
Recommended actuating cylinders**	Type	**DCE 240/240**	**DCE 240/240**	**DCE 240/240**	**DCE 240/240**	**DCE 240/240**

* For internal clamping reduce the draw pull by 30 %.
** SMW-AUTOBLOK 272: technical details of DCE cylinders see general catalog

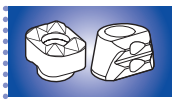

SMW-AUTOBLOK 400

SMW-AUTOBLOK 394

SMW-AUTOBLOK 259

High precision 2+2 jaw power chuck with self-centering independent jaw movement Ø 1000 - 2000 mm

- Closed center
- Tongue & groove

TPT-RC

2+2 independent jaw movement
TONGUE & GROOVE
Radial setting of jaws

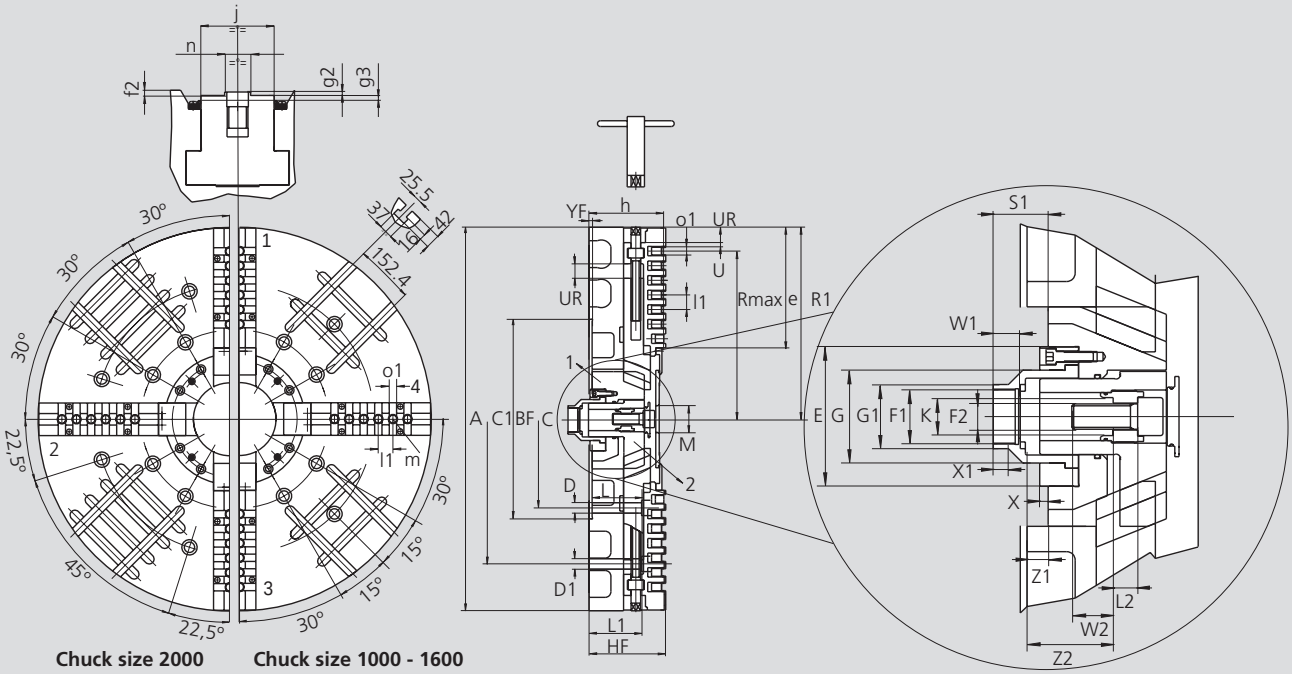

Chuck size 2000 **Chuck size 1000 - 1600**

Subject to technical changes.
For more detailed information please ask our customer service.

SMW-AUTOBLOK Type			TPT-RC 1000		TPT-RC 1250		TPT-RC 1400	TPT-RC 1600	TPT-RC 2000
Mounting			Z520	A20	Z520	A20	Z720	Z720	Z720
	A	mm	1005		1250		1400	1600	2000
	BF H6	mm	520		520		720	720	720
	C	mm	463.6		463.6		647.6	647.6	647.6
	C1	mm	700		700		1110	1110	1110
	D	mm	27		27		33	33	33
	D1	mm	27		27		27	27	27
	E	mm	180		180		164	164	164
	F1	mm	M75 x 2		M75 x 2		M75 x 2	M75 x 2	M75 x 2
	F2	mm	M24		M24		M24	M24	M24
	G	mm	100		100		100	100	100
	G1	mm	86		86		86	86	86
	HF	mm	200		200		240	240	260
	K	mm	37		37		37	37	37
	L	mm	145		145		183	183	205
	L1	mm	145		145		181	181	205
	L2	mm	31		31		31	31	31
	M	mm	70		70		70	70	70
Chuck open	R1	mm	502		623		696	796	996
	Rmax	mm	457		563		651	738	914
	S1	mm	100.5		100.5		95	95	95
Radial jaw stroke	U	mm	17		17		20	20	20
Radial setting stroke	UR	mm	30		30		40	40	40
	W1	mm	30		30		30	30	30
	W2	mm	47		47		47	47	47
	X	mm	5		5		0	0	0
	X1	mm	27		27		27	27	27
	YF	mm	8		8		8	8	8
Wedge stroke 1 max./min.	Z1	mm	30	0	30	0	40 0	40 0	60 20
Wedge stroke 2 max./min.	Z2	mm	116	85	116	85	143 113	143 113	162 122
	e	mm	295		416		446	539	739
	f2	mm	8		8		8	8	8
	g2	mm	4		4		4	4	4
	g3	mm	7		7		7	7	7
	h	mm	192		192		232	232	252
	j	mm	85		85		110	110	110
	l1	mm	38.1		38.1		38.1	38.1	38.1
Number + size	m	mm	7 x M24		10 x M24		11 x M24	13 x M24	17 x M24
	n	mm	30		30		30	30	30
Number + size	o1	mm	6 x 19.03		9 x 19.03		10 x 19.03	12 x 19.03	16 x 19.03

TX-C

Self centering
Rigid jaws

High precision pull-down chucks Ø 170 - 530 mm

- Active pull-down
- Tongue & groove
- 3 jaws

Application/customer benefits

- Clamping of workpieces with highest demand for **parallelism**
- Highest repeatability
- **Highest productivity** with long maintenance intervals
- Constant grip force and long lifetime ensure **constant quality of workpieces**

Technical features

- 3-jaw-design
- Active pull-down
- Centrifugal force compensation
- TONGUE & GROOVE base jaws
- Highest repeatability (similar to Diaphragm chucks)
- Central bore for coolant and/or air
- Permanent oil lubrication
- **proofline® chucks** = fully sealed - low maintenance

Standard equipment

3-jaw-chuck
Mounting bolts

Ordering example

3-jaw-chuck TX-C 210/A6

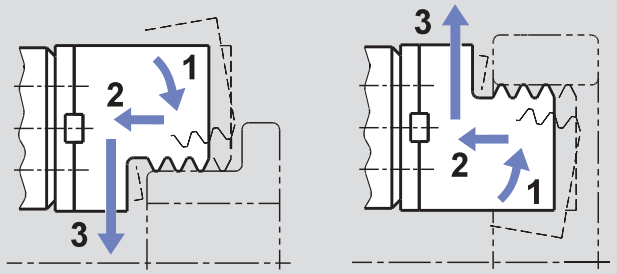

Principle of function:
- **1** pre-clamping - **2** active pull-down - **3** clamping
- For O.D. and I.D. clamping

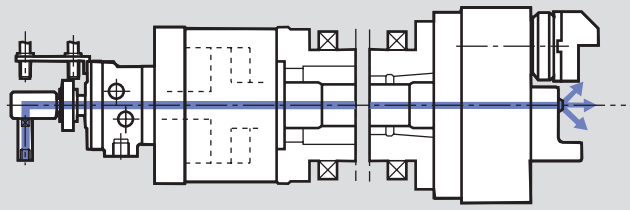

- TX-C chuck operated with a SIN-S cylinder with central bore for air sensing and/or coolant flush.

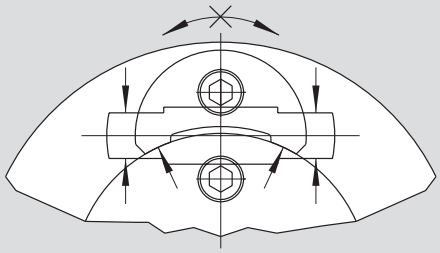

TX-C: High resistance to the radial torque, ideal for turning and milling application and guarantee of high precision, durability and constant process results.

Technical data

SMW-AUTOBLOK Type		TX-C 170	TX-C 210	TX-C 250	TX-C 315	TX-C 400	TX-C 530
Angular jaw stroke U°	deg.	5.2°	5.2°	4.9°	4.9°	4.7°	4.7°
Radial jaw stroke at distance **h**	mm	5.3	6.3	7	7	7.5	7.5
Pull down movement (standard)	mm	0.1	0.1	0.1	0.1	0.2	0.2
Axial piston stroke	mm	21	25	26	26	30	30
Max. draw pull**	kN	18	25	40	40	50	60
Max. gripping force at distance **h****	kN	44	60	96	96	120	150
Max. speed*	r.p.m.	5000	4500	3800	3000	2200	1800
Weight (plain back without top jaws)	kg	16	28	42	67	125	248
Moment of inertia	kg·m²	0.06	0.17	0.35	0.84	2.3	8.8
Recommended actuating cylinders	**Type**	**SIN-S 85**	**SIN-S 100**	**SIN-S 125**	**SIN-S 125**	**SIN-S 150**	**SIN-S 150**

* The above maximum speed is allowed with standard weight/height top jaws and applying the full draw pull only. For more informations please contact SMW-AUTOBLOK.
** For internal clamping reduce the draw pull by 30 %.

on request:
Tooling Standard Parts Catalog

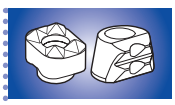

SMW-AUTOBLOK 400

SMW-AUTOBLOK 394

SMW-AUTOBLOK 259

High precision pull-down chucks Ø 170 - 530 mm

- Active pull-down
- Tongue & groove
- 3 jaws

TX-C

Self centering
Rigid jaws

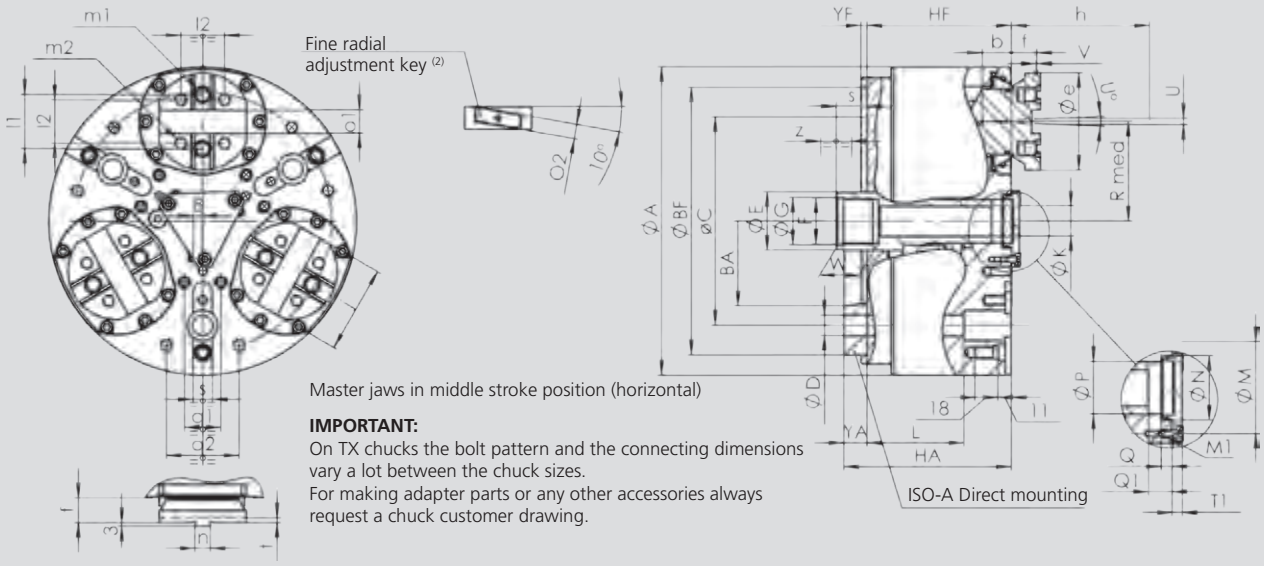

IMPORTANT:
On TX chucks the bolt pattern and the connecting dimensions vary a lot between the chuck sizes.
For making adapter parts or any other accessories always request a chuck customer drawing.

Subject to technical changes.
For more detailed information please ask our customer service.

SMW-AUTOBLOK Type			TX-C 170		TX-C 210		TX-C 250		TX-C 315		TX-C 400		TX-C 530	
Mounting			**Z140**	**A5**	**Z170**	**A6**	**Z220**	**A8**	**Z220**	**A8**	**Z300**	**A11**	**Z380**	**A11**
	A	mm	175		212		254		315		390		535	
	BF/BA H6	mm	140	82.5	170	106.375	220	139.719	220	139.719	300	196.869	380	285.775
	C	mm	104.8		133.4		171.4		171.4		235		330.2	
	D	mm	11.5		13.5		17		17		21		25	
	E	mm	36		38		48		48		75		75	
	F	mm	M28x1.5		M32 x 1.5		M38 x 1.5		M38 x 1.5		M60x1.5		M60x1.5	
	G H8	mm	29		33		39		39		61		61	
	HF/HA	mm	94	109	112	129	119	138	119	138	144	165	149	172
Through-hole	**K**	mm	14		18		25		25		52		52	
	L	mm	68		82		80		80		94		97	
	M	mm	36		42		63		63		90		90	
Thread/depth	**M1**	mm	M5/12		M6/11		M6/14		M6/14		M8/17		M8/17	
	N H8	mm	28		34		44		44		75		75	
	P	mm	23		28		36		36		65		65	
	Q	mm	6		5.5		7.5		7.5		9		9	
At middle stroke	**Q1**	mm	13		14		16		16		21		21	
At middle stroke	**Rmed**	mm	55		64		82		107		130		190	
At middle stroke	**S**	mm	17		20		25		25		25		21	
	T1	mm	10		7		7		7		15		15	
Radial stroke	**U°**	deg.	5.2°		5.2°		4.9°		4.9°		4.7°		4.7°	
Radial stroke (1)	**U**	mm	5.3		6.3		7		7		7.5		7.5	
Pull-down s/d	**V**	mm	0.1		0.1		0.1		0.1		0.2		0.2	
	W	mm	25		25		30		30		25		25	
Axial piston stroke	**Z**	mm	21		25		26		26		30		30	
	e	mm	60		75		80		80		105		105	
	f	mm	17		21		21		21		28		28	
Reference height	**h**	mm	40		48		58		58		63		63	
	j	mm	48		65.2		72.2		72.2		100.2		100.2	
	l1	mm	32		38		44.4		44.4		63.5		63.5	
	l2	mm	24		32		36		36		48		48	
Thread/depth	**m1**	mm	M10/13		M12/15		M12/15		M12/15		M16/18		M16/18	
Thread/depth	**m2**	mm	M8/12		M10/14		M10/14		M10/14		M12/14		M12/14	
	n h8	mm	7.94		7.94		12.7		12.7		12.7		12.7	
	o1 H7	mm	12.68		12.68		19.03		19.03		19.03		19.03	
	o2 h7	mm	9		9		12		12		12		12	
	s H9	mm	16		16		16		16		-		-	
	t	mm	4		4		4		4		7		7	
	YF	mm	5		5		5		5		6		6	
	q1	mm	-		-		-		-		-		-	
	q2	mm	-		-		-		-		-		-	

(1) Calculated at **h** distance from the chuck's face (where normally the clamping takes place).
(2) SMW-AUTOBLOK 164: General catalog

TX-RV

Self centering
Rigid jaws

Quick jaw change, high precision pull-down chucks Ø 170 - 530 mm

- **Active pull-down**
- **Quick jaw change (internal/external)**
- **3 jaws**

Application/customer benefits

- Clamping of workpieces with highest demand for **parallelism**
- Highest repeatability
- **Highest productivity** with long maintenance intervals
- For small-medium batches production, due to the quick jaw change
- All chucks are the same, the same jaws can be used on all chucks of the same size
- Constant grip force and long lifetime ensure **constant quality of workpieces**

Technical features

- 3-jaw-design
- Active pull-down
- Centrifugal force compensation
- Quick jaw change
- Highest repeatability (similar to Diaphragm chucks)
- Central bore for coolant and/or air
- Permanent oil lubrication
- **proofline® chucks** = fully sealed - low maintenance

Standard equipment

3-jaw chuck
Mounting bolts

Ordering example

3-jaw chuck
TX-RV 530/A11

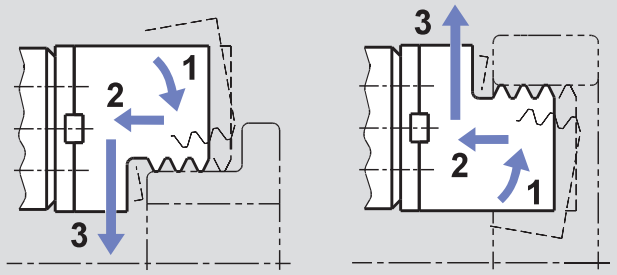

Principle of function:
- **1** pre-clamping - **2** active pull-down - **3** clamping
- For O.D. and I.D. clamping

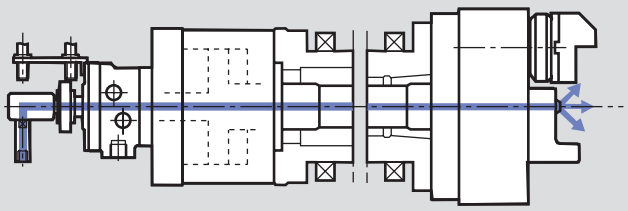

- TX-RV chuck operated with a SIN-S cylinder with central bore for air sensing and/or coolant flush.

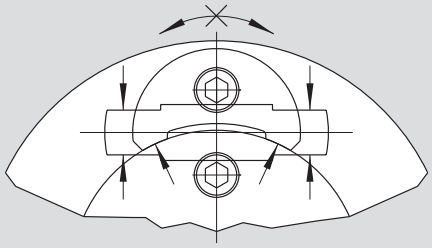

TX-RV: High resistance to the radial torque, ideal for turning and milling application and guarantee of high precision, durability and constant process results.

Technical data

SMW-AUTOBLOK Type		TX-RV 170	TX-RV 210	TX-RV 250	TX-RV 315	TX-RV 400	TX-RV 530
Angular jaw stroke U°	deg.	5.2°	5.2°	4.9°	4.9°	4.7°	4.7°
Radial jaw stroke at distance **h**	mm	5.3	6.3	7	7	7.5	7.5
Pull down movement (standard)	mm	0.1	0.1	0.1	0.1	0.2	0.2
Axial piston stroke	mm	21	25	26	26	30	30
Max. draw pull**	kN	18	25	40	40	50	60
Max. gripping force at distance **h****	kN	44	60	96	96	120	150
Max. speed*	r.p.m.	5000	4500	3800	3000	2200	1800
Weight (plain back without top jaws)	kg	16	28	42	67	125	248
Moment of inertia	kg·m²	0.06	0.17	0.35	0.84	2.3	8.8
Recommended actuating cylinders	**Type**	**SIN-S 85**	**SIN-S 100**	**SIN-S 125**	**SIN-S 125**	**SIN-S 150**	**SIN-S 150**

* The above maximum speed is allowed with standard weight/height top jaws and applying the full draw pull only. For more informations please contact SMW-AUTOBLOK.
** For internal clamping reduce the draw pull by 30 %.

on request: Tooling Standard Parts Catalog

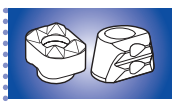

SMW-AUTOBLOK 400

SMW-AUTOBLOK 394

SMW-AUTOBLOK 259

Quick jaw change, high precision pull-down chucks Ø 170 - 530 mm

- Active pull-down
- Quick jaw change (internal/external)
- 3 jaws

TX-RV

Self centering
Rigid jaws

Master jaws in middle stroke position (horizontal)

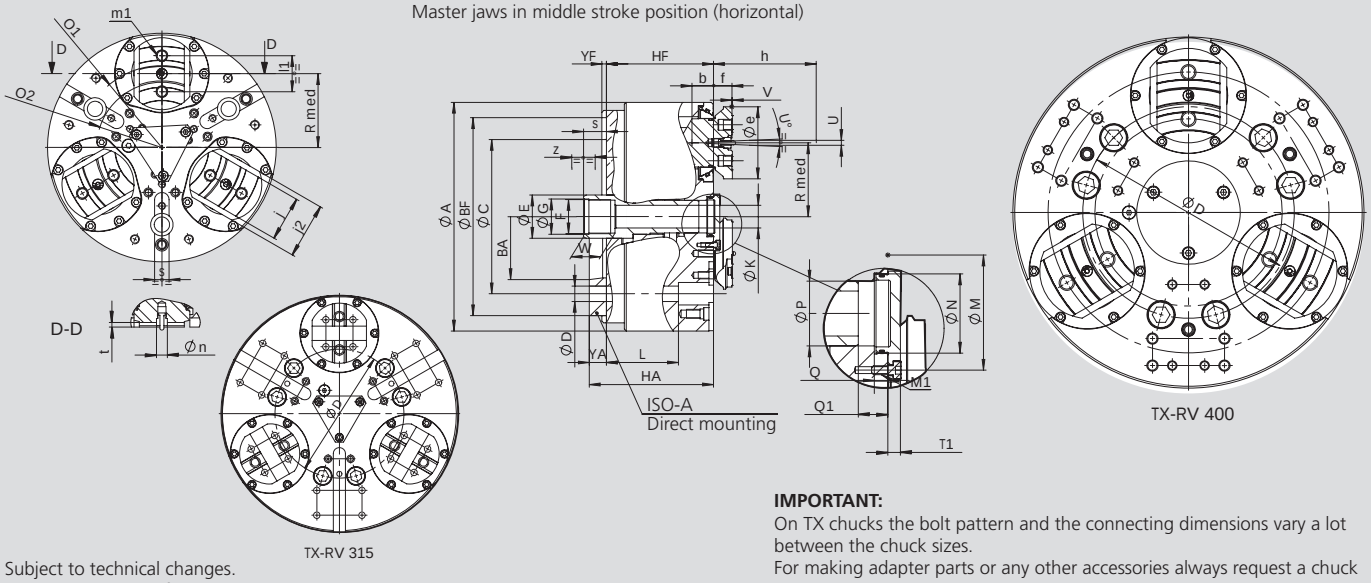

Subject to technical changes.
For more detailed information please ask our customer service.

IMPORTANT:
On TX chucks the bolt pattern and the connecting dimensions vary a lot between the chuck sizes.
For making adapter parts or any other accessories always request a chuck customer drawing.

SMW-AUTOBLOK Type			TX-RV 170		TX-RV 210		TX-RV 250		TX-RV 315		TX-RV 400		TX-RV 530	
Mounting			Z140	A5	Z170	A6	Z220	A8	Z220	A8	Z300	A11	Z380	A11
	A	mm	175		212		254		315		390		535	
	BF/BA H6	mm	140	82.5	170	106.375	220	139.719	220	139.719	300	196.869	380	285.775
	C	mm	104.8		133.4		171.4		171.4		235		330.2	
	D	mm	11.5		13.5		17		17		21		25	
	E	mm	36		38		48		48		75		75	
	F	mm	M28x1.5		M32 x 1.5		M38 x 1.5		M38 x 1.5		M60 x 1.5		M60 x 1.5	
	G H8	mm	29		33		39		39		61		61	
	HF/HA	mm	94	109	112	129	119	138	119	138	144	165	149	172
Through-hole	**K**	mm	14		18		25		25		52		52	
	L	mm	68		82		80		80		94		97	
	M	mm	36		42		63		63		90		90	
Thread/depth	**M1**	mm	M5/12		M6/11		M6/14		M6/14		M8/17		M8/17	
	N H8	mm	28		34		44		44		75		75	
	P	mm	23		28		36		36		65		65	
	Q	mm	6		5.5		7.5		7.5		9		9	
At middle stroke	**Q1**	mm	13		14		16		16		21		21	
At middle stroke	**Rmed**	mm	55		64		82		107		130		190	
At middle stroke	**S**	mm	17		20		25		25		25		20	
	T1	mm	10		7		7		7		15		15	
Radial stroke	**U°**	deg.	5.2°		5.2°		4.9°		4.9°		4.7°		4.7°	
Radial stroke (1)	**U**	mm	5.3		6.3		7		7		7.5		7.5	
Pull-down s/d	**V**	mm	0.1		0.1		0.1		0.1		0.2		0.2	
	W	mm	25		25		30		30		25		25	
Axial piston stroke	**Z**	mm	21		25		26		26		30		30	
	e	mm	60		75		80		80		105		105	
	f	mm	17		21		21		21		28		28	
Reference height	**h**	mm	40		48		58		58		63		63	
	j	mm	35		45		50		50		70		70	
	l1	mm	30		36		40		40		52		52	
Thread/depth	**m1**	mm	M10/12		M12/15		M12/15		M12/15		M16/18		M16/18	
	n h8	mm	12		12		12		12		12		12	
	o1 jS6	mm	122		142		180		230		276		396	
	O2 js6	mm	98		114		148		198		244		364	
	s H9	mm	16		16		16		16		-		-	
	t	mm	5		5		5		5		7		7	
	YF	mm	5		5		5		5		6		6	
	j2	mm	-		56		62		62		85		85	

(1) Calculated at **h** distance from the chuck's face (where normally the clamping takes place)

TSX-C 2+2

Pull down chuck
4 jaws 2+2

High precision pull-down chucks Ø 265 - 315 mm

- Active pull-down
- 2+2 jaws
- Tongue & groove

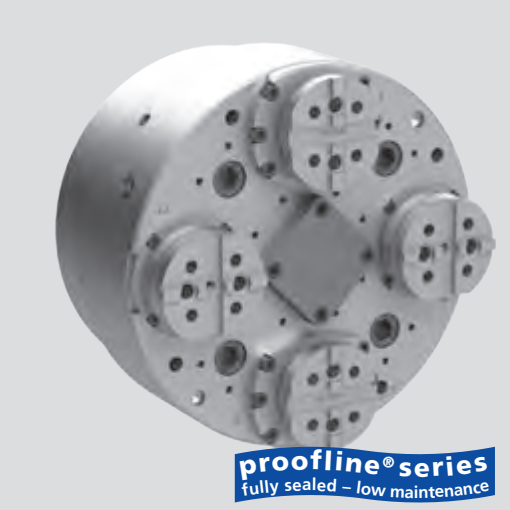

Application/customer benefits

- Self-centering clamping of irregular pieces on four sides even on two different axial levels. For example: 1st operation of the differential case turning
- Machining of parts where the concentricity between the turned diameters and the square / rectangular / irregular profile on which the chuck clamps is very accurate
- Centering the pieces with the two self-centering movements of the two pairs of jaws
- Actuation only with double piston cylinders of the series DCE
- Clamping of workpieces with highest demand for **parallelism**
- **Highest productivity** with long maintenance intervals
- Constant grip force and long lifetime ensure **constant quality of workpieces**

Technical features

- 2+2 jaw chuck with 2 independent self-centering jaw drives, thanks to the 2 internal wedges
- Jaw 1+3: TX jaws very rigid and accurate
- Jaw 2+4: can be rigid (TSXR-C) or floating depending on the customer application
- Active pull-down
- Centrifugal force compensation
- TONGUE & GROOVE master jaws
- Optional central hole for air or coolant
- Permanent grease lubrication
- **proofline® chucks**
  = fully sealed - low maintenance

Standard equipment

2+2-jaw chuck
Mounting bolts

Ordering example

2+2-jaw chuck TSXR-C 265

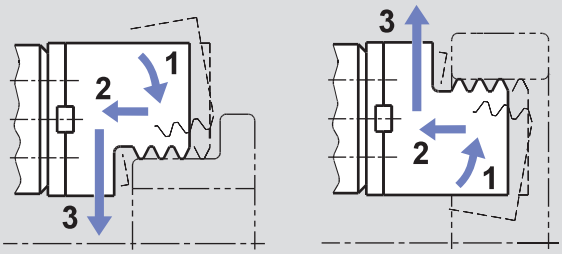

Principle of function:
- **1** pre-clamping - **2** active pull-down - **3** clamping
- For O.D. and I.D. clamping

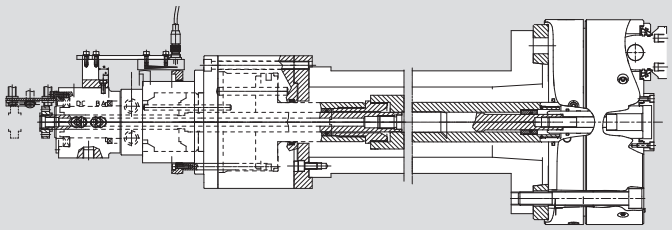

- **TSX-C:** chuck operated with a DCE cylinder with central bore for air sensing or coolant flush (only 1 media).

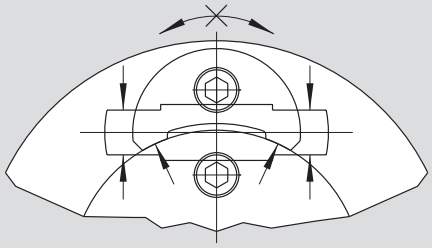

TSX-C: High resistance to the radial torque, ideal for turning and milling application and guarantee of high precision, durability and constant process results.

Technical data

SMW-AUTOBLOK Type Number of jaws		TSXR-C 265 2+2	TSXR-C 315 2+2
Angular jaw stroke U° (TX)	deg.	3.3°	3.9°
Radial jaw stroke at distance **h (TX)**	mm	4	5.5
Axial piston stroke (TX)	mm	16	20
Max. draw pull (TX)**	kN	16	26
Max. gripping force at distance **h** (TX)**	kN	40	64
Angular jaw stroke U1° (TS)	deg.	4.2	4,6
Radial jaw stroke at distance **h1 (TS)**	mm	5.1	6.6
Axial piston stroke (TS)	mm	20	24
Max. draw pull (TS)**	kN	16	26
Max. gripping force at distance **h1** (TS)**	kN	40	64
Pull down movement (standard)	mm	0.1	0.1
Max. speed*	r.p.m.	3250	2500
Weight (plain back without top jaws)	kg	52	88
Moment of inertia	kg·m²	0.45	1.1
Recommended actuating cylinders	**Type**	DCE 64-64	DCE 64-64

* The above maximum speed is allowed with standard weight/height top jaws and applying the full draw pull only. For more informations please contact SMW-AUTOBLOK.
** For internal clamping reduce the draw pull by 30 %.

High precision pull-down chucks Ø 265 - 315 mm

- Active pull-down
- 2+2 jaws
- Tongue & groove

TSX-C 2+2

Pull down chuck
4 jaws 2+2

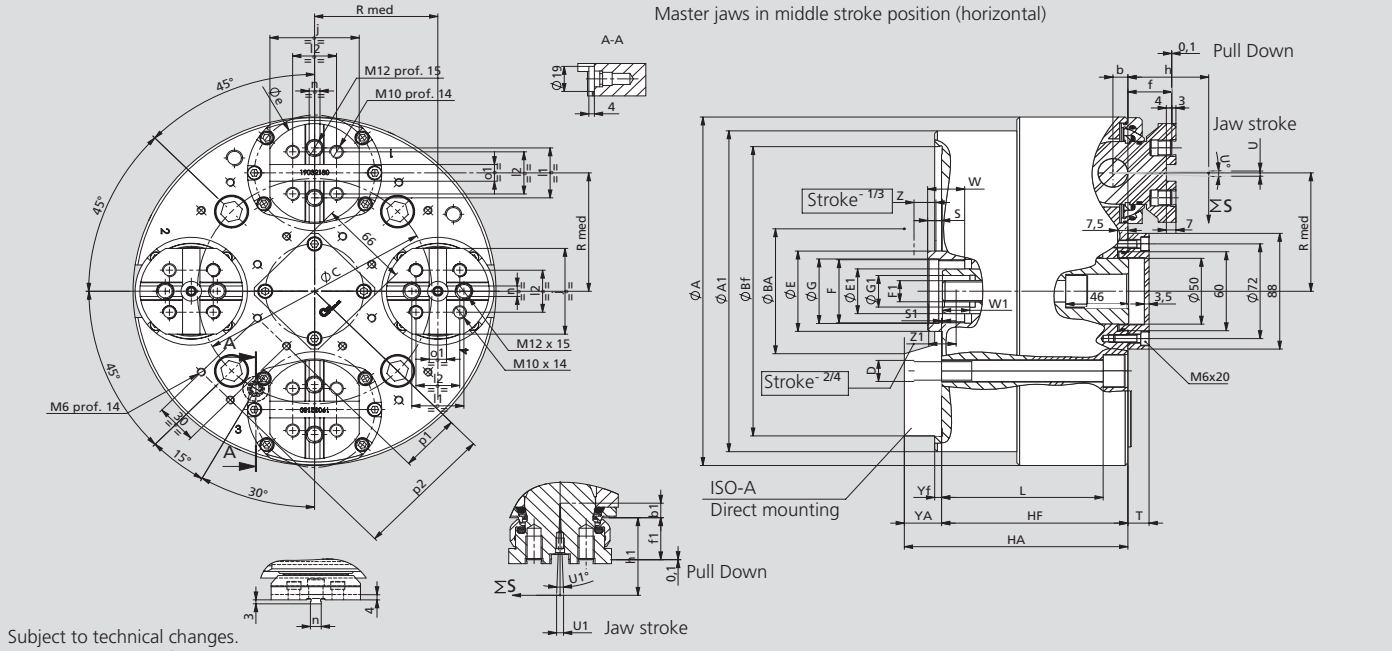

Subject to technical changes.
For more detailed information please ask our customer service.

SMW-AUTOBLOK Type			TSXR-C 265		TSXR-C 315	
Mounting			Z220	A8	Z220	A11
	A	mm	265		315	
	BF/BA H6	mm	220	139.719	300	196.869
	C	mm	171.4		235	
	D	mm	M16		M20	
	E	mm	48		48	
	F	mm	M48 x 1.5		M88 x 1.5	
	G H8	mm	49		49	
	HF/HA	mm	136	155	147	168
	E1	mm	34		34	
	F1	mm	M16		M16	
	G1 H8	mm	24		24	
	A1	mm	244		315	
	L	mm	118		124	
	Rmed	mm	90		107	
At middle stroke	S	mm	10.1		12.5	
At middle stroke	S1	mm	0.6		1.4	
	T	mm	15.5		15.5	
Radial stroke	U°	deg.	3.3°		3.9°	
Radial stroke	U1°	deg.	4.2°		4.6°	
Radial stroke [1] (1-3)	U	mm	4		5.5	
Radial stroke [1] (2-4)	U1	mm	5.1		6.6	
	W	mm	27		27	
	W1	mm	20		20	
Axial piston stroke 1-3	Z	mm	16		20	
Axial piston stroke 2-4	Z1	mm	20		24	
	e	mm	75		80	
	f	mm	32.1		32.1	
	f1	mm	32		32	
Reference height	h	mm	59		69	
Reference height	h1	mm	59		69	
	j	mm	65.2		72.2	
	l1	mm	38		44.4	
	l2	mm	32		36	
	b	mm	10.9		12.9	
	b1	mm	11		13.2	
	n h8	mm	7.94		12.7	
	o1 H7	mm	12.68		19.03	
	YF	mm	5		6	
	p1	mm	44		44	
	p2	mm	102		77	
	p3	mm	-		102	
	p4	mm	-		135	

[1] Calculated at **h h1** distance from the chuck's face (where normally the clamping takes place).

TEF-C

Self centering
Floating jaws

High precision pull-down 2+2+2 equalising
Ø 260 - 850 mm

- Active pull-down
- Tongue & groove
- 6 jaws 2+2+2

Application/customer benefits

- Clamping of thin walled workpieces
- Suitable for OP 10 or unique clamping applications
- Low radial deformation with 2+2+2 clamping
- Constant grip force and long lifetime ensure **constant quality of workpieces**
- Low profile, ideal for machines with limited Z axis stroke

Technical features

- 6-jaw-design
- Active pull-down
- Floating base jaws for 12 point contact
- Centrifugal force compensation
- TONGUE & GROOVE base jaws
- Central bore for coolant and/or air
- Permanent oil/grease lubrication
- **proofline® chucks =** fully sealed - low maintenance

Standard equipment

6-jaw chuck
Mounting bolts

Ordering example

6-jaw chuck
TEF-C 260/A8

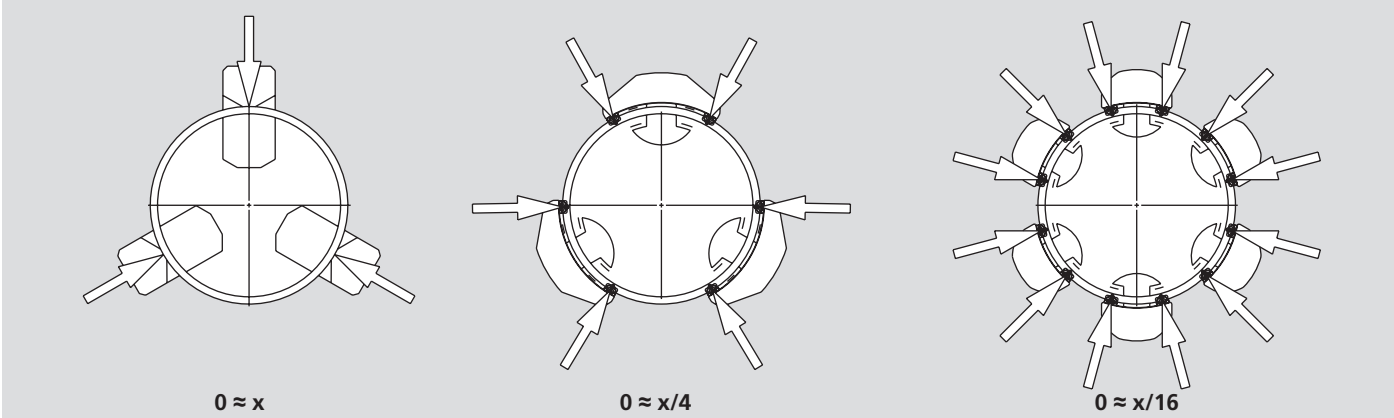

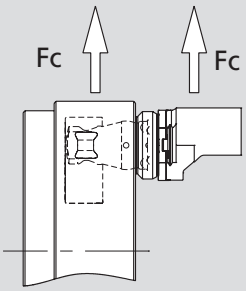

Very high centrifugal force compensation for very high speed.

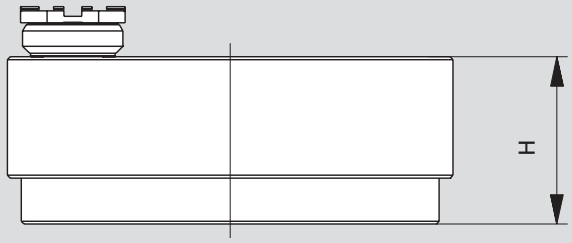

Very low profile and little limitation of the Z axis ideal for high production machines like the inverted spindle and frontal spindle lathes.

Technical data

SMW-AUTOBLOK Type		TEF-C 260	TEF-C 320	TEF-C 400	TEF-C 530	TEF-C 650	TEF-C 850
Angular jaw stroke U°	deg.	5.2°	4.9°	4.9°	4.7°	4.7°	5°
Radial jaw stroke at distance **h**	mm	5.4	6	7	7.6	7.5	9.8
Angular compensation jaw stroke max.	deg.	±2.4°	±2.2°	±2.2°	±2.1°	±1.5°	±2.25°
Radial compensation at distance **h** max.	mm	±2.5	±2.7	±3.2	±3.5	±2	±4.5
Pull down movement (standard)	mm	0.1	0.1	0.1	0.2	0.8	0.4
Axial piston stroke	mm	24	29	29	35	35	37
Max. draw pull**	kN	18	25	40	50	60	100
Max. gripping force at distance **h****	kN	44	60	96	120	120	180
Max. speed*	r.p.m.	4200	3500	2500	1800	1200	1200
Weight (plain back without top jaws)	kg	39	68	118	234	370	770
Moment of inertia	kg·m²	0.33	0.85	2.5	8.4	20	71
Recommended actuating cylinders	**Type**	**SIN-S 100**	**SIN-S 100**	**SIN-S 125**	**SIN-S 125**	**SIN-S 150**	**SIN-S 200**

* The above maximum speed is allowed with standard weight/height top jaws and applying the full draw pull only. For more informations please contact SMW-AUTOBLOK.
** For internal clamping reduce the draw pull by 30 %.

High precision pull-down 2+2+2 equalising
Ø 260 - 850 mm

- Active pull-down
- Tongue & groove
- 6 jaws 2+2+2

TEF-C

Self centering
Floating jaws

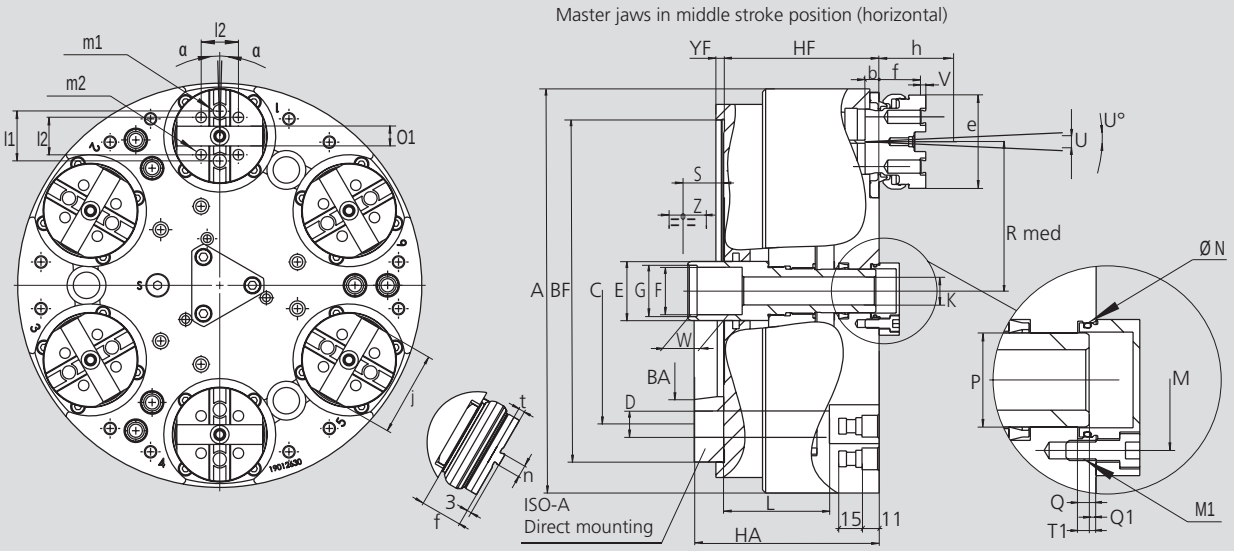

Subject to technical changes.
For more detailed information please ask our customer service.

SMW-AUTOBLOK Type			TEF-C 260		TEF-C 320		TEF-C 400		TEF-C 530		TEF-C 650		TEF-C 850	
Mounting			Z220	A8	Z280	A11	Z300	A11	Z380	A15	Z380	A15	Z520	A20
	A	mm	260		320		404		530		650		850	
	BF/BA H6	mm	220	139.719	280	196.869	300	196.869	380	285.775	380	285.775	520	412.775
	C	mm	171.4		235		235		330.2		330.2		463.6	
	D	mm	17		21		21		26		26		27	
	E	mm	38		48		48		75		75		100	
	F	mm	M32 x 1.5		M38 x 1.5		M38 x 1.5		M60 x 1.5		M60 x 1.5		M80 x 2	
	G H8	mm	33		39		39		61		61		81	
	HF/HA	mm	100	119	115	136	122	143	142	165	157	180	180	205
Through-hole	**K**	mm	18		25		25		52		52		75	
	L	mm	68		84		94		107		107		145	
	M	mm	42		63		63		75		75		*	
Thread/depth	**M1**	mm	M6/11		M6/11		M6/11		M8/16		M8/16		M8/16	
	N H8	mm	34		44		44		75		75		150	
	P	mm	28		36		36		65		65		100	
	Q	mm	5.5		7.5		7.5		9		9		18.5	
At middle stroke	**Q1**	mm	5		5.5		5.5		6.5		10.5		5	
At middle stroke	**Rmed**	mm	96		113		152		200		260		345	
At middle stroke	**S**	mm	23.1		23.5		18.3		36.3		25.5		22.6	
	T1	mm	13		13		13		15		12		*	
Radial stroke	**U°**	deg.	5.2°		4.9°		4.9°		4.7°		4.7°		5°	
Radial stroke (1)	**U**	mm	5.4		6		7		7.6		7.5		9.8	
Pull-down s/d.	**V**	mm	0.1		0.1		0.1		0.2		0.8		0.4	
	W	mm	25		30		30		26		26		30	
Axial piston stroke	**Z**	mm	24		29		29		35		35		37	
	α	deg.	±2°		±1.5°		±1.5°		±1.5°		±1°		±1.3°	
	b	mm	9		10		12		12		12		12.4	
	e	mm	60		75		80		105		105		127	
	f	mm	27		33		33		32		32		46	
Reference height	**h**	mm	50		60		70		80		80		100	
	j	mm	55.2		65.2		72.2		100.2		100.2		116.2	
	l1	mm	32		38		44.4		63.5		63.5		63.5	
	l2	mm	24		32		36		48		48		54	
Thread/depth	**m1**	mm	M10/16		M12/18		M12/18		M16/20		M16/20		M20/25	
Thread/depth	**m2**	mm	M8/14		M10/14		M10/14		M12/17		M12/17		M16/24	
	n h8	mm	7.94		7.94		12.7		12.7		12.7		12.7	
	o1 H7	mm	12.68		12.68		19.03		19.03		19.03		19.03	
	t	mm	4		4		4		7		4		7	
	YF	mm	5		5		6		6		6		6	

* Please ask for chuck drawing
(1) Calculated at **h** distance from the chuck's face (where normally the clamping takes place).

Clamping of easy deformed/ thin walled workpieces

High precision 6 jaw chucks (2+2+2) equalising

Tongue & groove

Metric serration

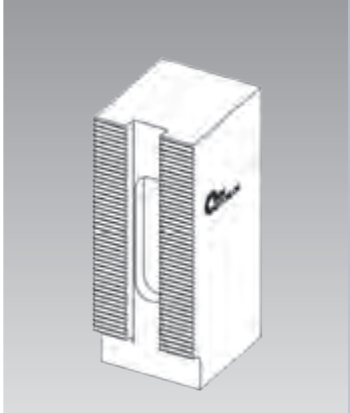

SJL-C/-M 225
SJL-C/-M 290
SJL-C/-M 400

proofline® series
fully sealed – low maintenance

2+2+2 equalising

Is clamping with 6 jaws, where always 2 jaws are equalising as a pair. This allows to compensate inaccuracy of the workpiece roundness. The grip force is always distributed equaly onto 6 jaws. The equal distribution of the grip forces results in a minimum of deformation.

Application for:
Raw material clamping (1. Operation)

6 jaw self centering

Is clamping concentric with all 6 jaws, where no equalisation is done during clamping.
All 6 jaws make the same radial movement towards the chucks center.

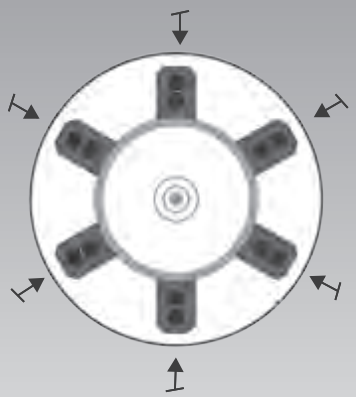

Application for:
Round, machined clamping diameters (2. Operation)

Centrifugal force compensation

The centrifugal forces of master- and top jaws are compensated by counter balance weights.
The centrifugal forces of the jaws under rotation are mostly compensated.

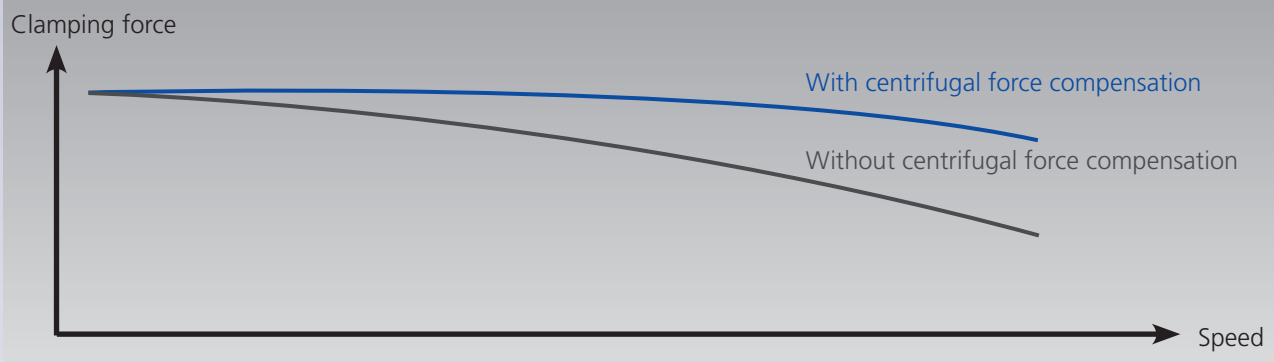

Clamping glossary

2+2+2 Equalisation: A system that allows 2 jaws in a pair to do a different radial jaw stroke. On raw material clamping the systems ensures, that all 6 jaws are in contact with the workpiece. The grip force is distributed onto all the 6 jaws, and reduces the deformation of the workpiece.

Locking system for 6 jaw self centering: **SJL chuck** have a locking system, that allows to lock the 2+2+2 equalisation.
In this setting the **SJL chuck** can be used like a standard 6 jaw chuck with 6 concentric jaws. This setting can be used to clamp thin walled workpieces that need an equal wall thickness.

Air sensing: Air is fed through the contact face of the work stop. When the workpiece is in contact with the work stop the airflow is stopped and converts into a signal. If the component is not correctly positioned or is lifted, the machine can not start or the spindle is stopped. The preparation for this important feature is standard on all **SJL Type** chucks.

Centrifugal force compensation: When jaw chucks are rotating the mass of the master jaws/ top jaws is subject to centrifugal force. This centrifugal force reduces the dynamic grip force, and thus limits the feeds and speeds for machining.
All **SJL chuck** have a centrifugal force compensation system built in, that reduces this effect, and allows machining at higher speed with more aggressive feed rates.

Chuck body reinforcement: When chucks are rotating, the chuck body has to support against the static grip force, and against the centrifugal force caused by the rotation speed. On 6 jaw chucks, the centrifugal force caused by the jaws is the double compared to 3 jaw chucks. In order to increase the stiffness of the chuck body, **SJL chuck** have a reinforcement on the chuck body.

High-low clamping: For easily deformed components. High gripping forces for the rough cut are reduced to low gripping forces for the finish cut without unchucking. This means less deformation on the finished components. Contrarily to conventional chucks the **SJL** lever drive is suitable for high-low clamping.

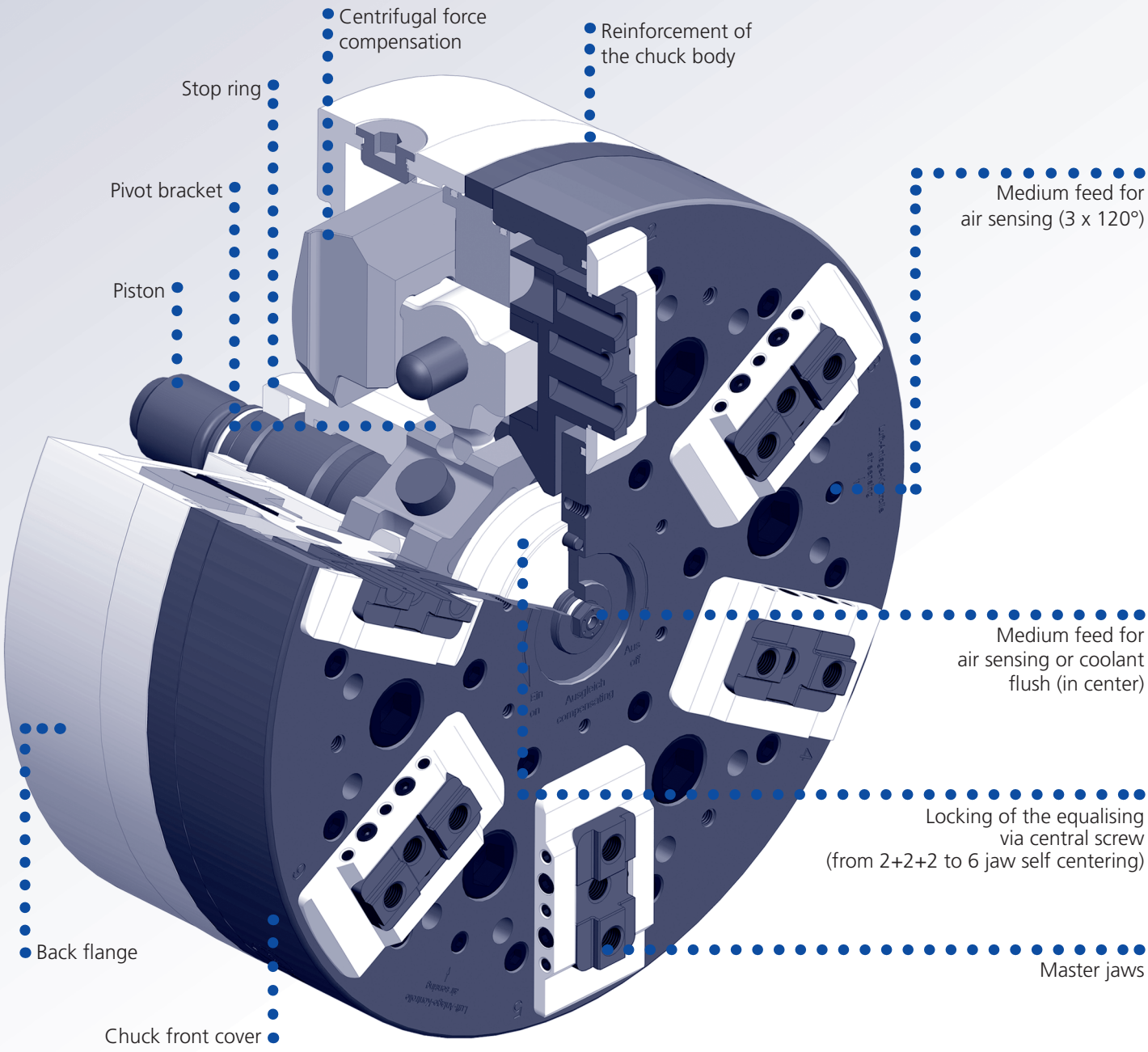

SJL-C

Self centering
TONGUE & GROOVE

SJL-M

Self centering
METRIC SERRATION

High precision 6 jaw chucks (2+2+2) equalising Ø 225 - 400 mm

- Jaws equalising as a pair
- Equalising mechanism lockable

Application / customer benefit

- Clamping of easy deformed workpieces
- Low deformation by means of 2+2+2 jaw clamping
- High radial and axial clamping accuracy
- Fully sealed and oil bath lubricated
- Ideal for high speeds

Technical data

- Adjustable to 6 jaw 2+2+2 or true 6 jaw clamping
- Channels for air and / or coolant (2 medium feed)
- Centrifugal force compensation
- **proofline® chucks** = fully sealed - low maintenance

Standard equipment

6 jaw chuck with mounting bolts and adjustment key
Oil

Chuck in open position = right end position

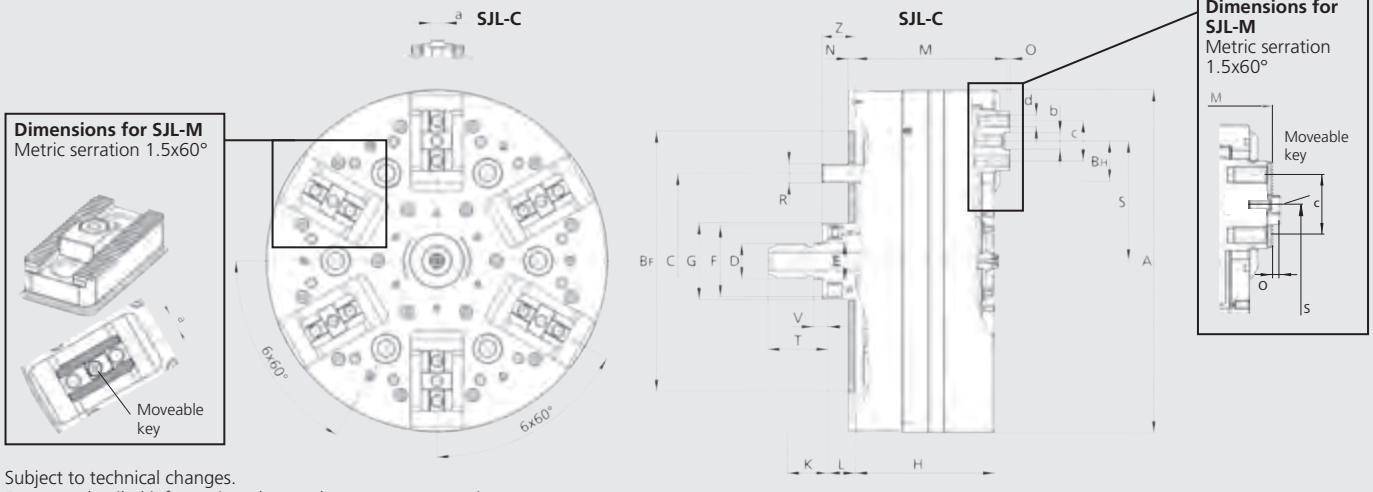

Subject to technical changes.
For more detailed information please ask our customer service.

SMW-AUTOBLOK Type			SJL-C-225	SJL-M-225	SJL-C-290	SJL-M-290	SJL-C-400	SJL-M-400
Mounting			Z170	Z170	Z220	Z220	Z300	Z300
	A	mm	225	225	290	290	400	400
	BF H6	mm	170	170	220	220	300	300
	C	mm	133.4	133.4	171.4	171.4	235	235
	D	mm	M24	M24	M30	M30	M42x3	M42x3
	E f7	mm	25	25	32	32	44	44
	F	mm	47	47	60	60	82	82
	G	mm	51	51	65	65	90	90
	H	mm	93	93	118	118	163	163
Piston stroke	K	mm	11.5	11.5	15	15	20.8	20.8
Piston position min.	L	mm	18	18	23	23	30.9	30.9
Piston position max.	L	mm	29.5	29.5	38	38	51.7	51.7
	M	mm	101	103.5	128	131	177	181
	N	mm	5	5	6	6	8	8
	O	mm	2.5	3	3	3,5	4	3.5
	R	mm	M12 (6x60°)	M12 (6x60°)	M16 (6x60°)	M16 (6x60°)	M20 (6x60°)	M20 (6x60°)
Max.	S	mm	79	79	101.5	101.5	139	139
Min.	S	mm	73	73	93.5	93.5	128	128
	T	mm	40	40	51	51	70	70
	V	mm	10	10	12.2	12.2	17	17
Protecting sleeve length	Z	mm	22.1	22.1	28.1	28.1	38.1	38.1
Key width	a	mm	10	10	12	12	14	14
	b	mm	11	-	14	-	19	-
	c	mm	27 (2x13.5)	27 (2x13.5)	34 (2x17.0)	33 (2x16.5)	45 (2x22.5)	45 (2x22.5)
	d	mm	M8 (3x)	M8 (3x)	M10 (3x)	M10 (3x)	M12 (3x)	M12 (3x)

High precision 6 jaw chucks (2+2+2) equalising Ø 225 - 400 mm

- Jaws equalising as a pair
- Equalising mechanism lockable

SJL-C
Self centering
TONGUE & GROOVE

SJL-M
Self centering
METRIC SERRATION

Technical data

SMW-AUTOBLOK Type		SJL-C-225	SJL-M-225	SJL-C-290	SJL-M-290	SJL-C-400	SJL-M-400
Stroke per jaw **BH**	mm	6	6	8	8	11	11
Equalising stroke at mid of jaw stroke	mm	+/- 1	+/- 1	+/- 1	+/- 1	+/- 2.5	+/- 2.5
Max. actuating force	kN	30	30	42	42	58	58
Max. gripping force	kN	45	45	65	65	90	90
Max. Speed	r.p.m.	4200	4200	3600	3600	2600	2600
Weight (without top jaws)	kg	26	26	51	51	136	136
Moment of inertia	kg·m²	0.16	0.16	0.5	0.5	2.75	2.75

Order review

SMW-AUTOBLOK Type	SJL-C-225	SJL-M-225	SJL-C-290	SJL-M-290	SJL-C-400	SJL-M-400
Mounting	Z170	Z170	Z220	Z220	Z300	Z300
Id. No.	160870	160922	160670	160940	160970	161001
Hex. Pin type socket wrench	202881		201064		203795	
Oil (RENOLIN CLPF 320 SUPER) 1 Ltr.	202532					

Top jaws for SJL

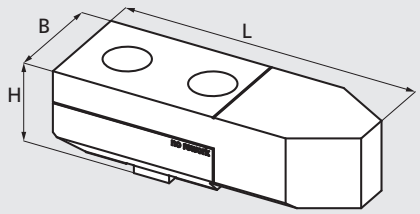

Top jaw WAC-SJL (Tongue and groove)

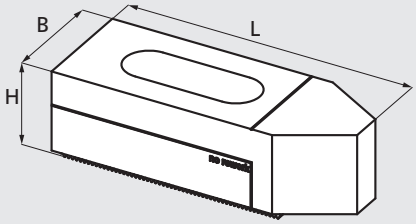

Top Jaw WAM-SJL (Metric serration)

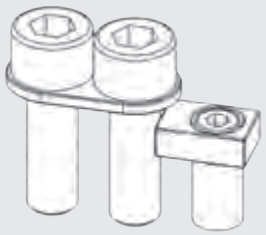
Mounting Kit WAM-SJL

SMW-AUTOBLOK Type	SJL-C 225	SJL-M 225	SJL-C 290	SJL-M 290	SJL-C-400	SJL-M-400
Jaw type	WAC-SJL 225	WAM-SJL 225	WAC-SJL 290	WAM-SJL 290	WAC-SJL 400	WAM-SJL 400
Id. No. / set	5300950	539053	5300955	539055	5301053	5301052
Mounting Kit (only WAM) / set		203572		203573		204115
Length L	94	84	115	108	150	153
Width B	20	20	40	40	52	52
Height H	32	32	36	35	46	46
Kg / set	2.4	2.4	5.4	4.8	12.6	12.6

IEP-D

2+2+2 movement
INCH SERRATION

IEP-C

2+2+2 movement
TONGUE & GROOVE

High precision 6 jaw chucks 2+2+2 equalising Ø 400 - 800 mm

- Closed center
- Equalising mechanism lockable

Application/customer benefits

- Clamping of thin walled workpieces
- Low radial deformation with 2+2+2 clamping
- Suitable for horizontal and vertical machines

IEP-D: Master jaws with INCH SERRATION
(3/32"x90° sizes 500-630-800, 1/16"x90° size 400)
IEP-C: Master jaws with TONGUE & GROOVE

Technical features

- Adjustable to 6 jaw 2+2+2 or true 6 jaw clamping
- Possibility to regulate the equalizing stroke from full for OP10 to very small for OP20
- Constant gripping force with permanent lubrication
- Centrifugal compensation for high spindle speed
- **proofline® chucks** = fully sealed – low maintenance

Standard equipment

Chuck with mounting bolts
1 set of soft top jaws
1 equalizing stroke regulating key

Ordering example

IEP-D 500/Z380

Actual gripping force diagram

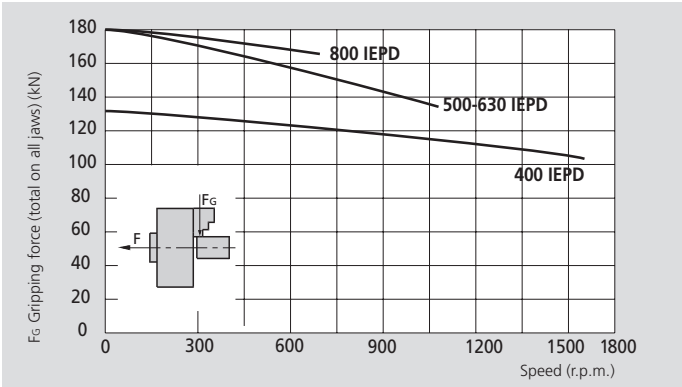

The data in the diagram refer to 6-jaw-chucks, newly maintained according to their service manuals using the original oil. The static and dynamic gripping forces have been measured using standard soft top jaws, placed in a position not exceeding the outer diameter of the chuck.

⚠ **Safety advice/danger of damage:**
When using taller/heavier jaws and/or clamping on a bigger diameter reduce draw pull/rotating speed accordingly.

Technical data

SMW-AUTOBLOK Type Number of jaws		IEP-D 400 2+2+2	IEP-C 400	IEP-D 500 2+2+2	IEP-C 500	IEP-D 630 2+2+2	IEP-C 630	IEP-D 800 2+2+2	IEP-C 800
Radial jaw stroke	mm	10		15		15		15	
Jaw compensation	mm	±2.5		±4		±4		±4	
Axial piston stroke	mm	20		30		30		30	
Max. draw pull**	kN	90		120		120		120	
Max. gripping force**	kN	130		180		180		180	
Max. speed	r.p.m.	1600		1100		800		650	
Weight (without top jaws)	kg	145		260		410		670	
Moment of inertia	kg·m²	2.9		8.5		20		55	
Hard top jaw (set of 3*) for IEP-D	Id. No.	12083036		12084546		12084546		12084546	
Soft top jaw (piece) for IEP-D	Id. No.	12073000		12074040		12075050		12075050	
Soft top jaw (piece) for IEP-C	Id. No.	12043060		12044050		12045050		12045050	
Recommended actuating cylinders	**Type**	**SIN-S 100/125/150**		**SIN-S 150/175/200**		**SIN-S 150/175/200**		**SIN-S 150/175/200**	

* 2 sets (=6 pieces) per chuck are required.
**For internal clamping reduce the draw pull by 30 %.

SMW-AUTOBLOK
259

High precision 6 jaw chucks 2+2+2 equalising Ø 400 - 800 mm

- Closed center
- Equalising mechanism lockable

IEP-D

2+2+2 movement
INCH serration

IEP-C

2+2+2 movement
TONGUE & GROOVE

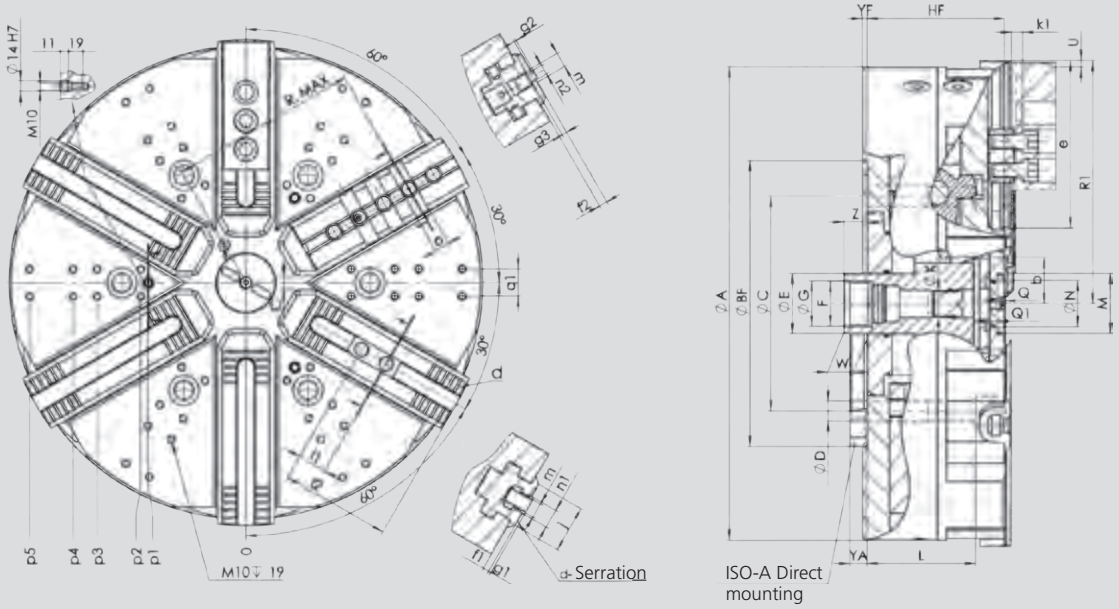

Subject to technical changes.
For more detailed information please ask our customer service.

SMW-AUTOBLOK Type			IEP-D 400	IEP-C 400	IEP-D 500	IEP-C 500	IEP-D 630	IEP-C 630	IEP-D 800	IEP-C 800
	A	mm	419	419	510	510	630	630	800	800
	BF H6	mm	300	300	380	380	380	380	520	520
	C	mm	235	235	330.2	330.2	330.2	330.2	463.6	463.6
	D	mm	21	21	25.5	25.5	25.5	25.5	25.5	25.5
	E	mm	75	75	80	80	80	80	80	80
	F	mm	M60 x 1.5	M60 x 1.5	M60 x 1.5	M60 x 1.5	M60 x 1.5	M60 x 1.5	M60 x 1.5	M60 x 1.5
	G H8	mm	61	61	61	61	61	61	61	61
	HF	mm	154	154	184	184	184	184	184	184
Through hole	**K**	mm	25.5	25.5	33	33	33	33	33	33
	L	mm	130	130	144	144	144	144	144	144
	M	mm	M80 x 2	M80 x 2	M80 x 2	M80 x 2	M80 x 2	M80 x 2	M80 x 2	M80 x 2
	N H8	mm	62	62	62	62	62	62	62	62
	Q	mm	10	10	10	10	10	10	10	10
	Q1	mm	10	10	10	10	10	10	10	10
Chuck open	**R1**	mm	212	212	263.5	263.5	323.5	323.5	408.5	408.5
Jaw stroke	**U**	mm	10	10	15	15	15	15	15	15
	W	mm	38	38	38	38	38	38	38	38
Max/min.	**Z**	mm	16/-4	16/-4	61/31	61/31	61/31	61/31	61/31	61/31
Min.	**b**	mm	45	45	46.5	46.5	46.5	46.5	46.5	46.5
Min.	**c**	mm	2.9	2.9	3.5	3.5	3.5	3.5	3.5	3.5
	d	inch	1/16"x 90°	-	3/32"x 90°	-	3/32"x 90°	-	3/32"x 90°	-
	e	mm	150	150	174	174	234	234	319	319
	f1	mm	8	-	8	-	8	-	8	-
	f2	mm	-	8	-	11	-	11	-	11
	g1	mm	3.5	-	3.5	-	3.5	-	3.5	-
	g2	mm	-	3	-	3	-	3	-	3
	g3	mm	-	3.5	-	6.5	-	6.5	-	6.5
	j	mm	58	58	63	63	63	63	63	63
	k1	mm	9	9	15.5	15.5	15.5	15.5	15.5	15.5
	l1	mm	30	38.1	38	38.1	38	38.1	38	38.1
Max./min.	**l2**	mm	108/43	-	138/54	-	198/54	-	283/54	-
	m	mm	M16	M16	M20	M20	M20	M20	M20	M20
	n1 h8	mm	21	-	25.5		25.5	-	25.5	-
	n2	mm	-	12.7	-	12.7	-	12.7	-	12.7
	o	mm	-	19.03	-	19.03	-	19.03	-	19.03
Radial position	**p1**	mm	150	150	130	130	130	130	130	130
Radial position	**p2**	mm	140	140	140	140	140	140	165	165
Radial position	**p3**	mm	195	195	-	-	198	198	200	200
Radial position	**p4**	mm	-	-	230	230	230	230	255	255
Radial position	**p5**	mm	-	-	-	-	288	288	290	290
	q1	mm	36	36	36	36	36	36	36	36
	Rmax	mm	-	139	-	198	-	250	-	351
	YF/YA	mm	6 | 23	6 | 23	6 | 23	6 | 23	6 | 23	6 | 23	6 | 23	6 | 23
Number of cross grooves (IEP-C)			-	1	-	2	-	3	-	6

IEP-D

2+2+2 movement
MODULE 2 SERRATION

High precision 6 jaw chucks 2+2+2 equalising Ø 1000 - 1600 mm

- Closed center
- Equalising mechanism lockable

Application/customer benefits

- Clamping of thin walled workpieces
- Low radial deformation with 2+2+2 clamping
- Suitable for horizontal and vertical machines

Technical features

- Adjustable to 6 jaw 2+2+2 or true 6 jaw clamping
- Possibility to regulate the equalizing stroke from full for OP10 to very small for OP20
- Constant gripping force with permanent lubrication
- Master jaws with MODULE 2 SERRATION (Pitch 6.28 mm)
- Centrifugal compensation for high spindle speed
- **proofline® chucks** = fully sealed – low maintenance

Standard equipment

Chuck with mounting bolts
1 set of soft top jaws
1 equalizing stroke regulating key

Ordering example

IEP-D 1250/Z520

Actual gripping force diagram

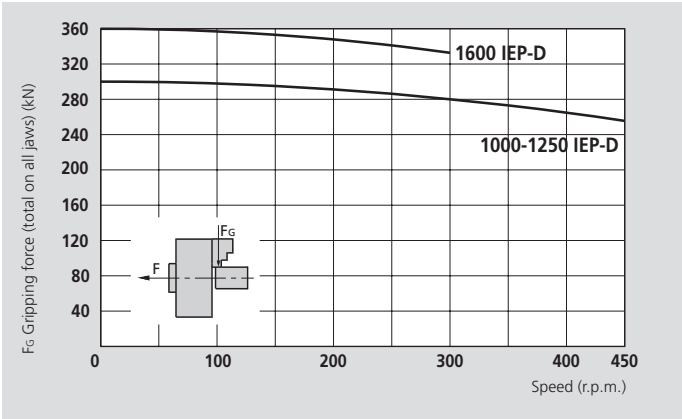

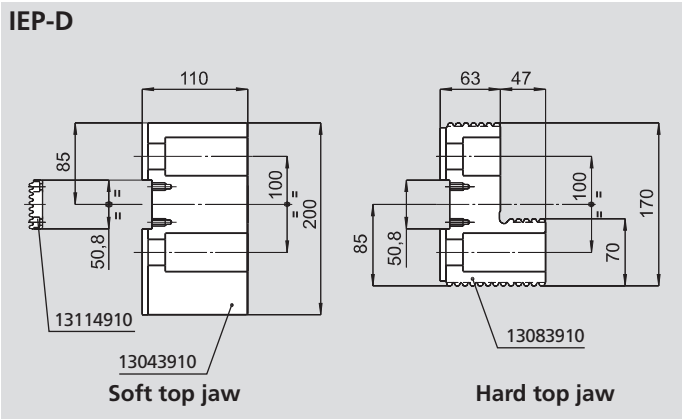

The data in the diagram refer to 6-jaw-chucks, newly maintained according to their service manuals using SMW-AUTOBLOK K67 grease. The static and dynamic gripping forces have been measured using standard soft top jaws, placed in a position not exceeding the outer diameter of the chuck.

⚠ **Safety advice/danger of damage:**
When using taller/heavier jaws and/or clamping on a bigger diameter reduce draw pull/rotating speed accordingly.

Technical data

SMW-AUTOBLOK Type Number of jaws		IEP-D 1000 2+2+2	IEP-D 1250 2+2+2	IEP-D 1600 2+2+2
Radial jaw stroke	mm	20	20	25
Jaw compensation	mm	±5	±5	±5
Axial piston stroke	mm	40	40	50
Max. draw pull*	kN	200	200	240
Max. gripping force*	kN	300	300	360
Max. speed	r.p.m.	450	400	280
Weight (without top jaws)	kg	1100	1550	2400
Moment of inertia	kg·m²	127	273	640
Hard top jaw (piece)	Id. No.	13083910	13083910	13083910
Soft top jaw (piece)	Id. No.	13043910	13043910	13043910
Recommended actuating cylinders	**Type**	**SIN-S 200-250**	**SIN-S 200-250**	**SIN-S 200-250**

* For internal clamping reduce the draw pull by 30 %.

SMW-AUTOBLOK
259

High precision 6 jaw chucks 2+2+2 equalising Ø 1000 - 1600 mm

- Closed center
- Equalising mechanism lockable

IEP-D

2+2+2 movement
MODULE 2 SERRATION

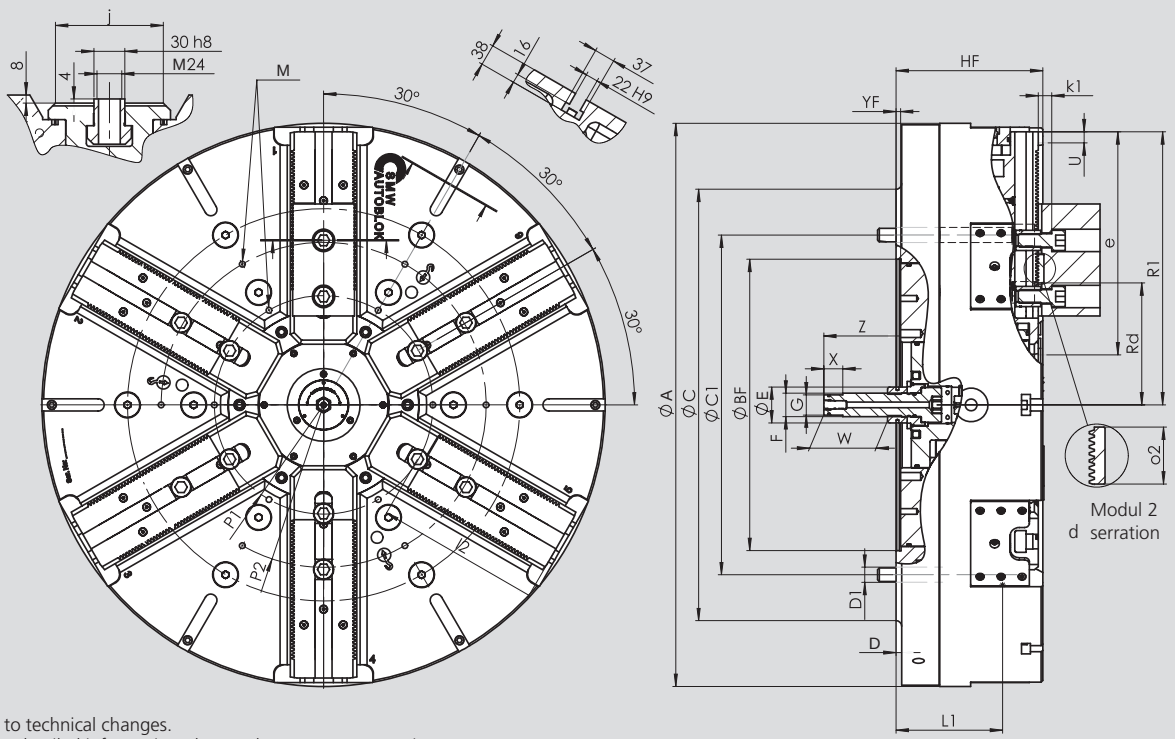

Subject to technical changes.
For more detailed information please ask our customer service.

SMW-AUTOBLOK Type			IEP-D 1000	IEP-D 1250	IEP-D 1600
	A	mm	1005	1250	1600
	BF H6	mm	520	520	720
	C	mm	700	900	1225
	C1	mm	700	700	1110
	D	mm	10	10	58
	D1	mm	27	27	27
	E	mm	64	64	64
	F	mm	M42 x 3	M42 x 3	M42 x 3
	G H8	mm	36	36	36
	HF	mm	254	254	272
	M	mm	M12x22	M12x22	M16x28
	L1	mm	207	207	225
Chuck open	**R1**	mm	498	620.5	811
Chuck open	**Rd**	mm	228	228	288.5
Jaw stroke	**U**	mm	20	20	25
	W	mm	114	114	114
	X	mm	34	34	34
	YF	mm	8	8	8
Max./min.	**Z**	mm	156 / 116	156 / 116	156 / 106
Serration	**d**	M	Module 2	Module 2	Module 2
	e	mm	345	465	595
	j	mm	105	105	131
	k1	mm	24	24	24
Max./min.	**l2**	mm	295 / 118	417 / 118	531 / 118
	o2	mm	50.8	50.8	50.8
	P1	mm	390	390	760
	P2	mm	580	580	1000

AXN®

Automatic
indexing chuck

Automatic indexing chucks Ø 210 - 1250 mm

- Hydraulic clamping and indexing
- 2 jaws
- Divisions: 4 x 90°/8 x 45°/3 x 120°/6 x 60° or specials

Application/customer benefits

- Fully automated and high productivity machining of components with orthogonal axis or with 45°, 60° or 120° axis
- High productivity for machining of workpieces like valve bodies, spiders or fittings (see picture below) at high position accuracy

AXN: Automatic indexing chuck with hydraulic clamping and indexing

Technical features

- Rigid holding of the workpiece at high revolutions allowing high chip removal rates
- High positioning and repeatability precision
- Reliable indexing system with constant oil lubricated internal mechanism
- Constant and automatic in-process controls for extremely safe machining
- **proofline® chucks** = fully sealed – low maintenance

Components supplied on request

Adapter parts and clamping jaws

Unique features

- Hardened and ground body and internal parts designed to avoid deformation, ensuring rigidity and accuracy.
- Easy installation to the machine.
- Indexing movement during spindle rotation, allowing a quick change between the multiple working axes.
- Indexing and clamping mechanism constantly oil lubricated and supported by strong systems of roller bearings.
- Very high maximum speed, with centrifugal force compensation system, for higher productivity performance.
- Very simple hydraulic system based on just 4 hoses, 2 for the indexing mechanism and 2 for the clamping piston.
- Internal mechanisms fully protected against contamination by coolant, chips and dust.
- Constant and automatic control of the position of the part and other working parameters by the C.N.C. of the machine, or by a separate electronic interface.

General operating diagram

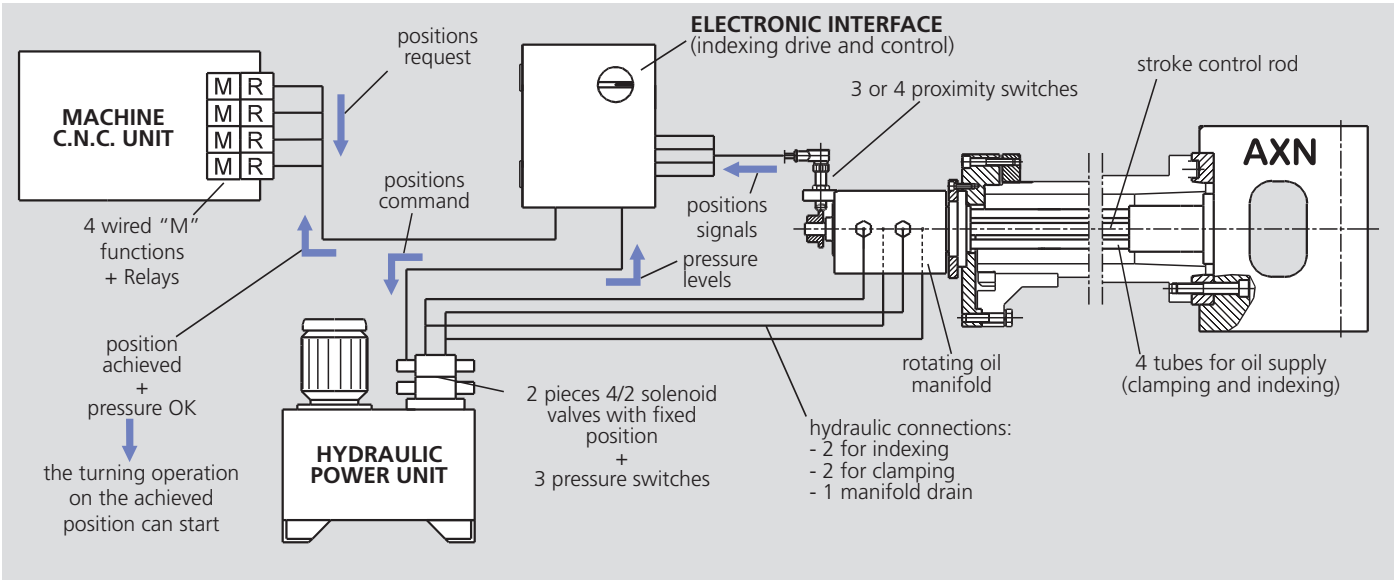

Automatic indexing chucks Ø 210 - 1250 mm

- Hydraulic clamping and indexing
- 2 jaws
- Divisions: 4 x 90°/8 x 45°/3 x 120°/6 x 60° or specials

AXN®

Automatic indexing chuck

Unique indexing system

- Extremely simple and rigid indexing system
- On the indexing shaft there is a triangle, square or multiple face shape. The indexing shaft „A“ is rotated by the piston „C“ and is locked in position by the piston „B“.
- For clamping and indexing 4 hydraulic lines are needed.

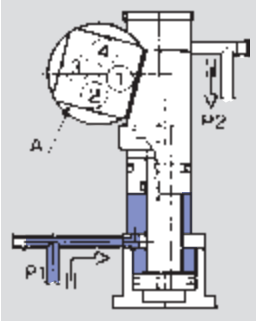

Fig. 1
Pressure in P1
Indexing shaft A locked in position 1 by the locator B: turning operation on the first side of the component.

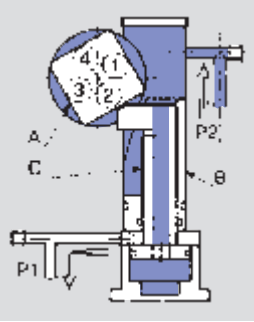

Fig. 2
Pressure in P2 (indexing)
The locator B retracts and releases the indexing shaft A; the finger C moves forward and rotates the shaft by 45°.

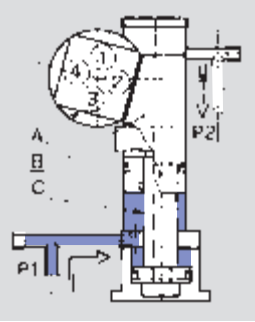

Fig. 3
Pressure in P1
The finger C retracts, while the locator B moves forward rotating the shaft A to 90° and locking it in position 2 for machining of the workpiece.

4

Centrifugal force compensation system

- Unique hydraulic system designed to reduce the loss of gripping force caused by the centrifugal force on the clamping piston P and clamping jaw A.
- The counterweight M is in a radial hole in the chuck body connected to the hydraulic circuit through the non-return valve V.
- During rotation, the pressure created by the counterweight M increases the pressure on the clamping piston P and compensates for the loss of gripping force due to the centrifugal force.

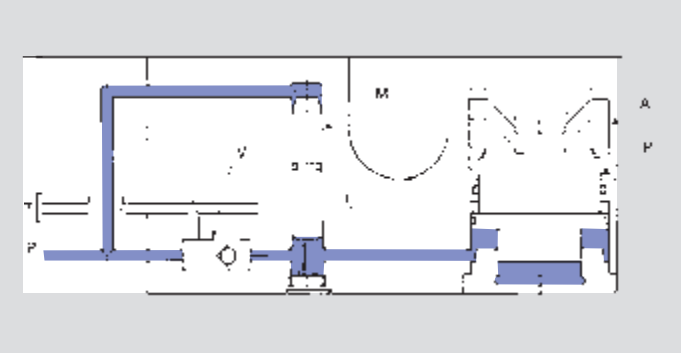

Indexing position control system

- The indexing control is mounted on the oil manifold. It is actuated by a rod system and monitored by 4 proximity switches.
- The cam „E“ on the indexing jaw moves the rear switch ring N“ via the rod „F“, lever „H“, rod „G“ and pullback spring „M“.
- The corresponding proximity switch for each indexing positionis actuated by the switch ring „M“ and confirms, that the indexing position is being reached.

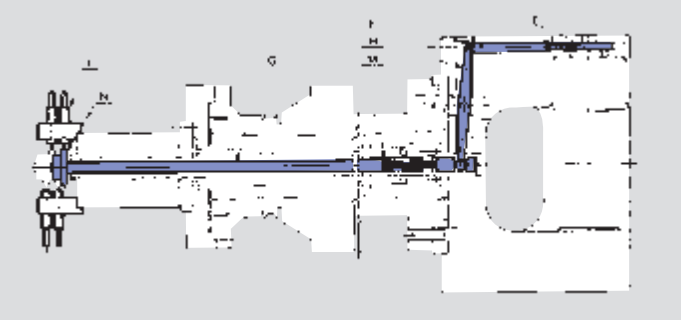

Interchangeability between AXN indexing chuck and front end power chuck HYD-S

The AXN chuck can easily and quickly be changed with a front end power chuck with 3 or 4 jaws type HYD-S.
The oil manifold and the tube bundle remain mounted on the machine to actuate the chuck.

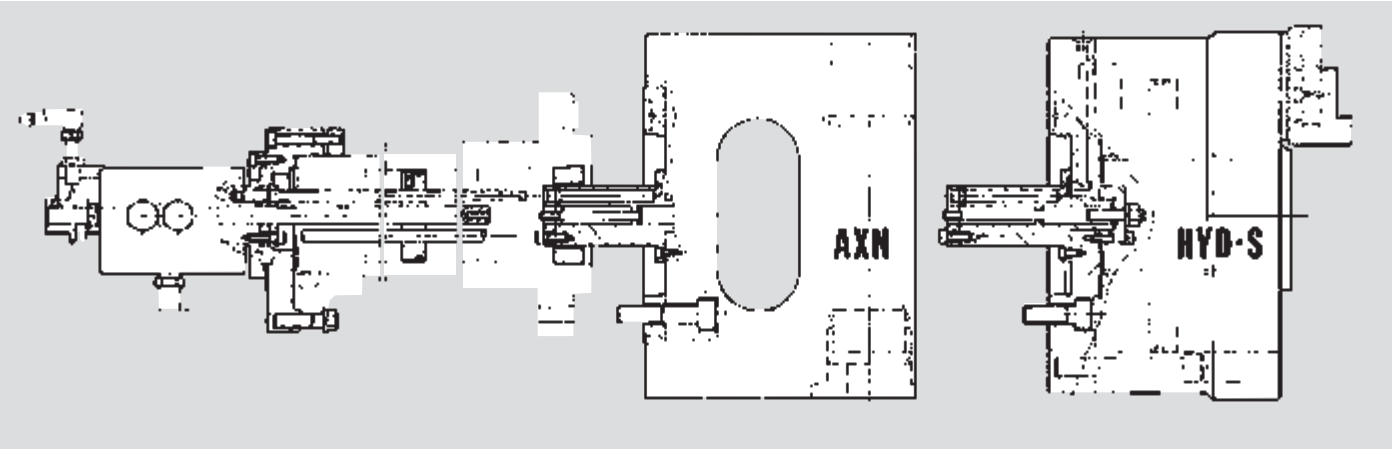

Which is the right indexing chuck diameter for my parts?

- The complete line of AXN indexing chucks has been designed to clamp and index almost all kind of multi axis parts that are possible to find on the market.
- The important dimensions to check in the following drawing and table are:
  - **G** diameter **>** the biggest diagonal of the component
  - **T** dimension **+** indexing jaw room (jaw mounted on the indexing shaft) **>** 1/2 of the height of the component.
- Another way to check if the part can be indexed on a specific chuck, is to make a simple drawing showing the part clamped in center by the clamping jaws and its 360° rotation around the indexing axis inside of the internal pocket of the chuck.
- Besides the workpiece dimensions also parameters as the clamping force, the stroke of the clamping piston, the overhang of the component from the chuck face sufficient tool clearance and the working cycle, are relevant.

Attention: The requested AXN chuck size is not only determined by the size and weight of the component, but also by the production process. Therefore the determination of the AXN-chuck size must be done in accordance with SMW-AUTOBLOK.

The experienced SMW-AUTOBLOK technicians can help you in all steps of this decision process: don't hesitate to contact them!

Highest accuracy is achieved if finishing operation is done at same spindle speed (constant r.p.m.).

Dimensions

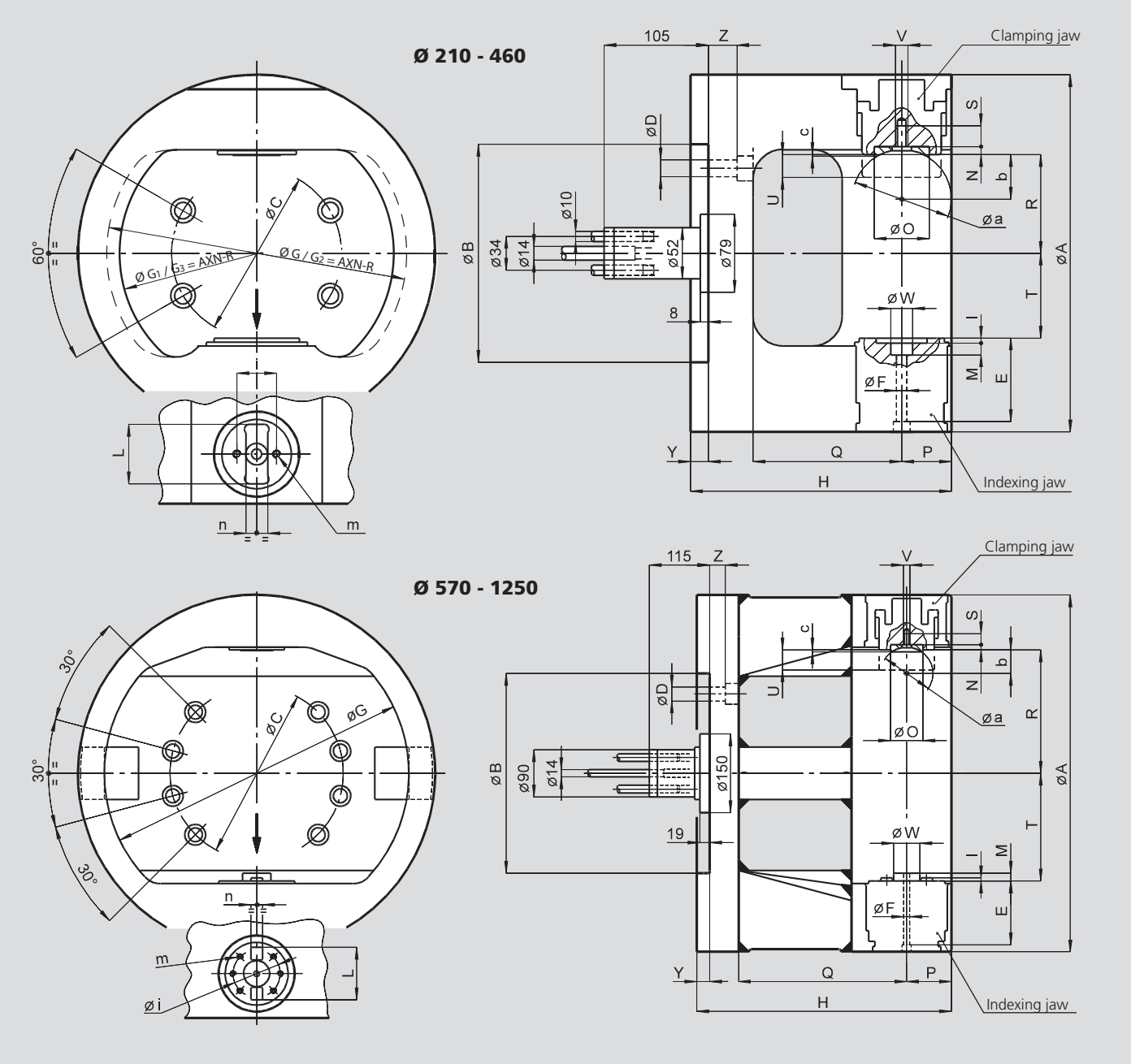

AXN Automatic indexing chucks Ø 210 - 1250 mm
■ Divisions: 4 x 90°/8 x 45°/3 x 120°/6 x 60° or specials

AXN-R Automatic indexing chucks, reinforced Ø 210 - 315 mm
■ Divisions: 4 x 90°/8 x 45°/3 x 120°/6 x 60° or specials

AXN®
Automatic indexing chuck standard body

AXN®-R
Automatic indexing chuck with reinforced body

ISO-A flanges for AXN chucks

FF 1
Direct
ISO-A mounting

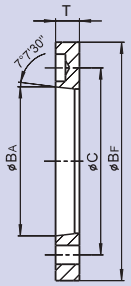

FF 2
Reduction
ISO-A mounting

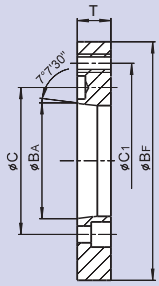

FF 3
Increase
ISO-A mounting

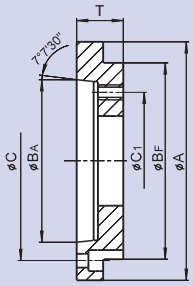

Chuck size	Spindle	Type	Id. No.	A	BF	BA	C	C1	T
210-235	A5	2	24552030	-	170	82.563	104.8	133.4	24
210-235	A6	1	24162500	-	170	106.375	133.4	-	24
254-280-315-360	A6	2	24562530	-	220	106.375	133.4	171.4	24
205-235	A8	3	24182030	210	170	139.719	171.4	133.4	40
254-280-315-360	A8	1	24182500	-	220	139.719	171.4	-	19
400-460	A8	2	24183100	-	300	139.719	171.4	235	30
254-280-315-360	A11	3	24112530	280	220	196.869	235	171.2	50
400-460	A11	1	24113100	-	300	196.869	235	-	21
570-680	A11	2	24115000	-	380	196.869	235	330.2	40
570-680	A15	1	24127100	-	380	285.775	330.2	-	33
850-1250	A15	2	24126100	-	520	285.775	330.2	463.6	40
850-1250	A20	1	24178000	-	520	412.775	463.6	-	25

Main dimensions and technical data

SMW-AUTOBLOK Type AXN			210	235	254	280	315	360	400	460	570	680	850	1050	1250
	A	mm	210	235	254	280	315	360	400	460	570	680	850	1050	1250
	B	mm	170	170	220	220	220	220	300	300	380	380	520	520	520
	C	mm	133.4	133.4	171.4	171.4	171.4	171.4	235	235	330.2	330.2	463.6	463.6	463.6
	D	mm	13	13	17	17	17	17	21	21	27	27	27	27	27
	E	mm	70	70	73	73	84	84	99	99	122	122	142	160	212
	F	mm	5.5	5.5	8.5	8.5	10.5	10.5	10.5	10.5	11	11	11	17	21
Max. workpiece rotation dia.	**G**	mm	184	206	228	250	275	315	350	410	490	600	750	900	1080
Max. axial loading window	**G1**	mm	175	197	216	240	261	301	333	394	466	576	730	880	1070
Max. workpiece rotation dia.	**G2**	mm	160	180	195	210	245	-	-	-	-	-	-	-	-
Max. axial loading window	**G3**	mm	150	170	183	198	230	-	-	-	-	-	-	-	-
	H	mm	187	194	214	227	252	266	293	323	442	492	570	680	795
	I	mm	4	4	5	5	5	5	5	5	6	6	6	10	10
	L	mm	42	42	45	45	60	60	70	70	100	100	100	154	168
	M	mm	9	9	11	11	12	12	12	12	15	15	15	18	18
	N	mm	3	3	6	6	7	7	10	10	10	10	10	10	10
	O	mm	22	22	36	36	48	48	62	62	62	62	62	70	70
	P	mm	36	36	42	42	53	53	60	60	92	92	95	130	145
	Q	mm	95	102	112	125	136	150	170	200	270	320	385	460	560
Max.	**R**	mm	41.9	54.5	57	70	77	99.5	110	140	180	235	305	360	405
	S	mm	12	12	14	14	18	18	18	18	19	19	19	22	22
	T	mm	30	42.5	45	58	63	85.5	91	121	150	205	270	310	340
Clamping jaw stroke	**U**	mm	15	15	17	17	23	23	30	30	40	40	55	65	86
	V	mm	M6	M6	M8	M8	M10	M10	M10	M10	M10	M10	M10	M12	M12
	W H6	mm	12	12	18	18	22	22	22	22	50	50	50	55	65
	Y	mm	16	16	16	16	18	18	18	18	25	25	25	25	25
	Z	mm	28	28	32	32	29	29	24	24	50	50	60	70	60
	a	mm	40	40	60	60	100	100	100	100	100	100	100	110	110
	b	mm	17.5	17.5	26	26	45	45	42	42	42	42	42	47	47
	c	mm	0.5	0.5	0.5	0.5	0.5	0.5	1	1	1	1	1	3	3
	i	mm	28	28	35	35	40	40	40	40	90	90	90	130	148
	m	mm	M5	M5	M6	M6	M8	M8	M8	M8	M10	M10	M10	10xM12	10xM12
	n H6	mm	12	12	18	18	22	22	22	22	22	22	22	22	22
Clamping piston area		cm²	30	30	43	43	63.6	63.6	86.6	86.6	113	113	132	227	530
Max pressure		bar	45	45	45	45	45	45	45	45	45	45	45	45	45
Max. speed (1)		r.p.m.	4400	3800	3600	3400	2800	2400	2200	1800	1200	1000	700	500	400
Moment of inertia		kg·m²	0.17	0.27	0.45	0.69	1.27	2.15	3.4	6.4	20	39	106	290	530
Clamping top jaw weight (1)		kg	0.6	0.6	1.3	1.3	2	2	4	5	6	7	9	15	50
Weight		kg	28	32	47	57	82	104	137	182	370	520	890	1600	2200

(1) **IMPORTANT:**

- Max rotation speed can be reached only at max. operating pressure and using a clamping jaw with a mass not exceeding the value shown in the above schedule.
- The component to be machined and the two clamping jaws must always be perfectly balanced around the axis of rotation, when this is not possible, or the clamping jaw is heavier, the rotation speed must be correspondingly reduced.
- The component may be indexed during rotation; when working at high r.p.m., it is advisable to reduce speed by at least 50% during the indexing operation to avoid vibrations due to the unbalance of masses while the part is in an intermediate position.

Shaft chuck
Complete machining of

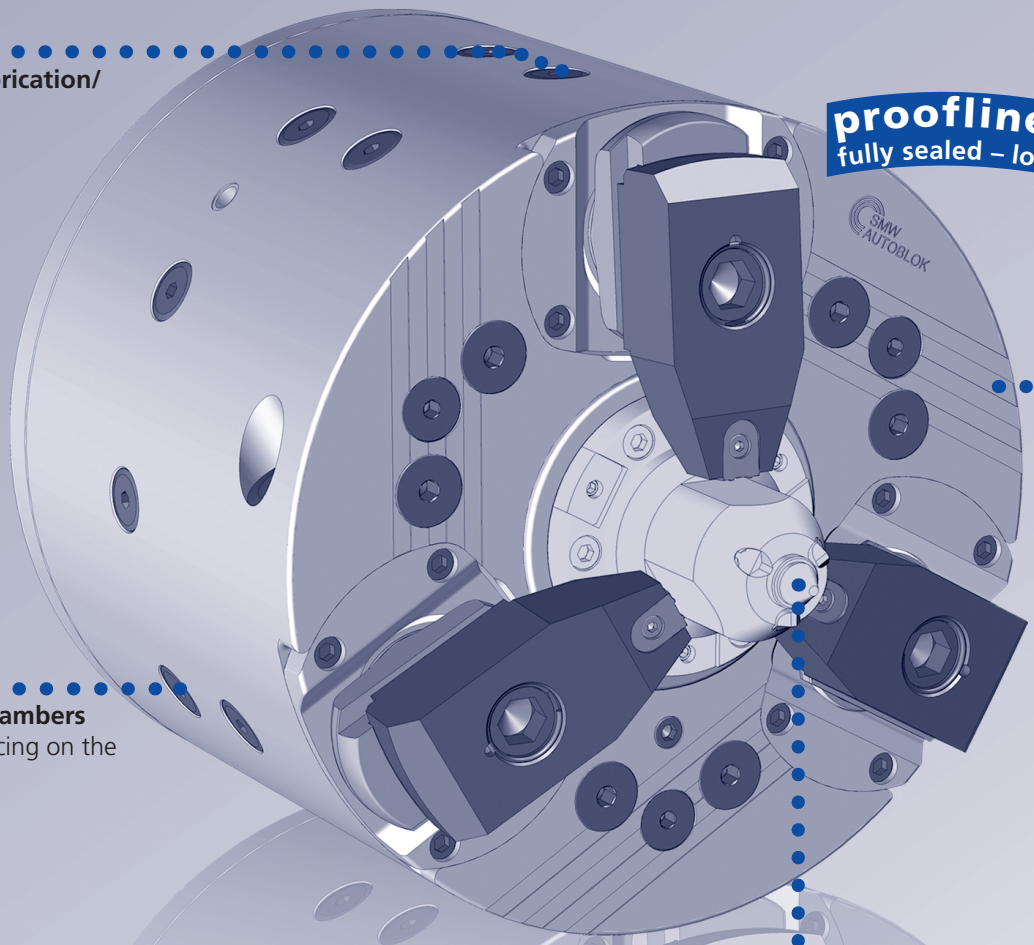

Constant lubrication/
filled with oil

proofline® series
fully sealed – low maintenance

Jaw carrier, retracted
The workpiece is driven by the face driver

Balancing chambers
for fine balancing on the machine

Face driver
power operated via double piston cylinder or with spring loaded center

The application: Complete machining of shafts in one setup

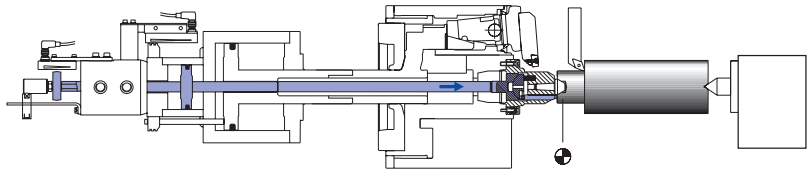

1. Machine clamping dia. (only necessary when using the self centering chuck):
The jaws are retracted. The component is clamped between centers and driven by the face driver. This operation can be eliminated if the clamping dia. is already machined when the center bore is manufactured. This operation is not necessary when using the chuck with compensating jaws.

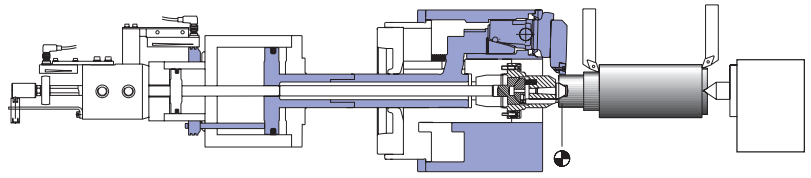

2. Rough machining:
The part is driven with the high gripping force of the jaws. High chip removal is possible.

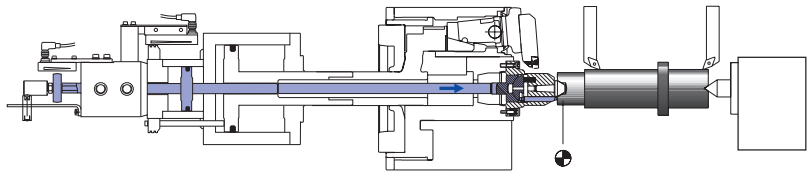

3. Finish machining:
The chuck body is retracted. The part is clamped between centers and driven by the face driver. The complete outline can be machined with perfect concentricity.

with face driver
shafts in one setup
W 215 • W 260 • W 325 • W 460

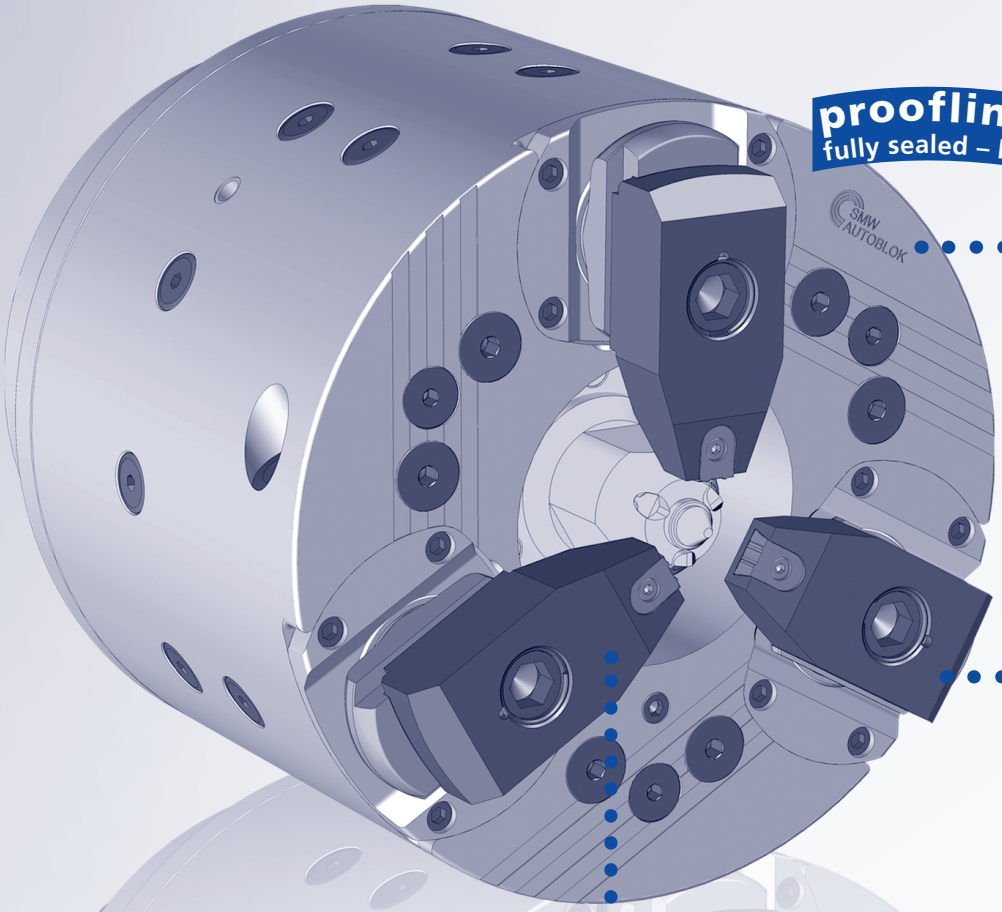

proofline® series
fully sealed – low maintenance

Jaw carrier, forward
High torque transmission with the jaws

Clamping
compensating or self-centering jaw clamping

Pull down
of the workpiece to the centerpoint by pivoting movement **of the jaws**

QUICK JAW CHANGE IN LESS THAN 1 MINUTE

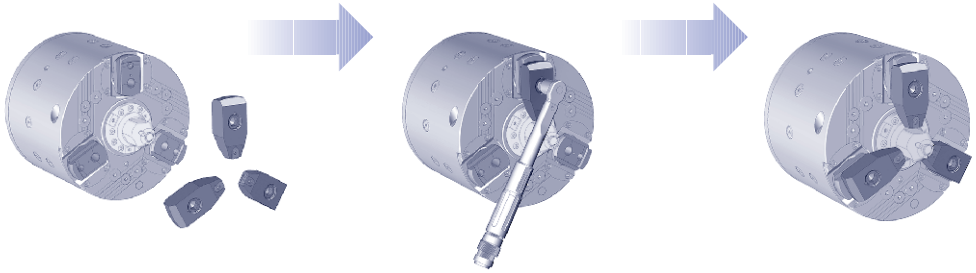

- **QUICK AND SIMPLE – NO LOOSE PARTS**

QUICK-CHANGE-FACE-DRIVER IN LESS THAN 2 MINUTES

- Highest accuracy (Runout of face driver center point > 0.02 mm TIR)
- No adjustment necessary. Standard face drivers with self centering installation. (radial adjustment = option)*

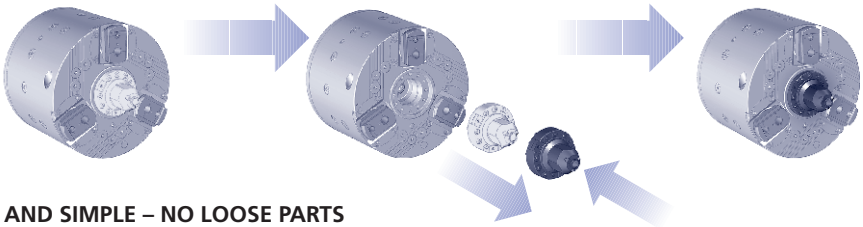

- **QUICK AND SIMPLE – NO LOOSE PARTS**

* A radial fine adjustable face driver version for higher accuracy is available on request

Type 1
Shaft chuck with face driver with fixed center ZHVD-SZ or DCN double piston cylinder

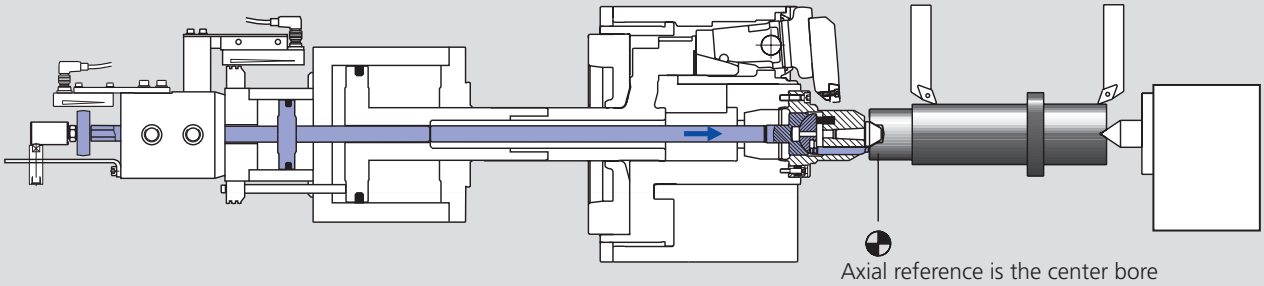

Power operated face driver with fixed center type SNF
(The design of the face driver is made according to the component)

- The axial reference is the center bore of the component.
- Fixed center guarantees highest concentricity.
- The driving pins are actuated via piston No. 2 of the double piston cylinder ZHVD-SZ.
  The driving pins penetrate into the face of the component (Piston No. 1 is used for chuck actuation).
- Clamped/unclamped position of the face driver is monitored by proximity switches/LPS.
- Highest accuracy - no adjustment necessary!

Type 2
Shaft chuck with face driver with spring-loaded center SIN-L long stroke cylinder

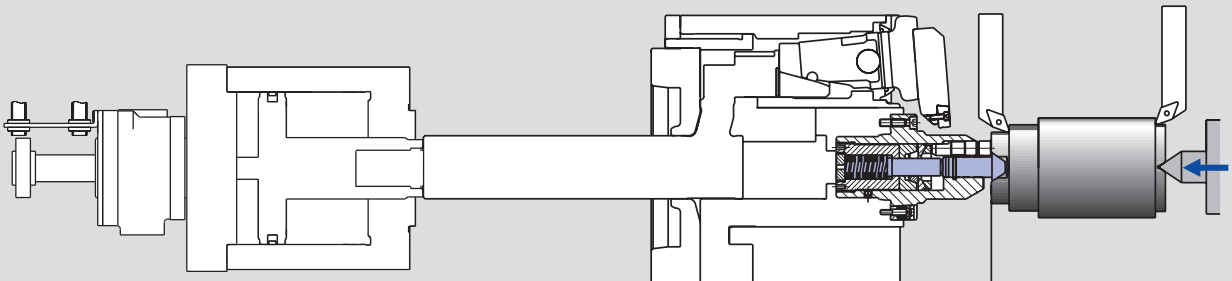

Face driver with spring-loaded center type FSB
(The design of the face driver is made according to the component)

- The axial reference is the face of the component.
- The component is pushed against the driving pins and the spring-loaded center by the tailstock thrust.
  The driving pins penetrate into the face of the component.
- A special built-in locking mechanism holds the spring-loaded center and holds the component in its axial position.
- Highest accuracy – no adjustment necessary!

Low maintenance - low wear by oil bath lubrication

Oil to be changed annually
Regular oil level check

Oil: CGLP ISO VG 68

proofline® series
fully sealed – low maintenance

Chuck size	W-215 liters	W-260 liters	W-325 liters	W-460 liters
Oil quantity horizontal mounting	0.25	0.50	1.00	1.50
Oil quantity vertical mounting	0.50	1.00	1.70	3.00

Refill oil

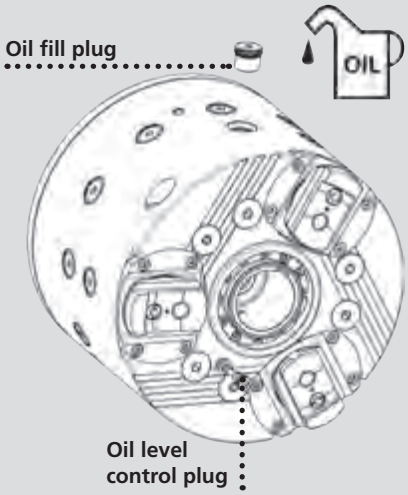

Applications

Shaft

Turning operation of:

- Concentric dia.
- Faces
- Outlines

Milling operation of:

- Lubrication channels
- Slots
- Serration
- Outlines

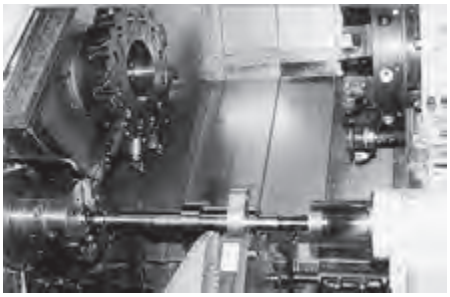

Crankshaft

Turning operation of:

- Bearing dia.
- Crank sides
- Crank O.D.

Milling operation of:

- Cranks
- Reference slots
- Serration
- Lubrication channels

Camshaft

Turning operation of:

- Bearing dia.
- Cam faces

Milling operation of:

- Cam profile
- Slots
- Serration
- Lubrication channels

W

Shaft chuck with retractable jaw carrier
Face driver

Shaft chuck Ø 215 - 460 mm

Main dimensions and technical data

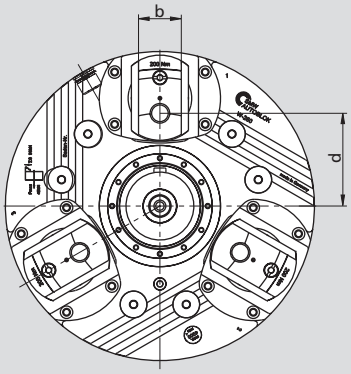

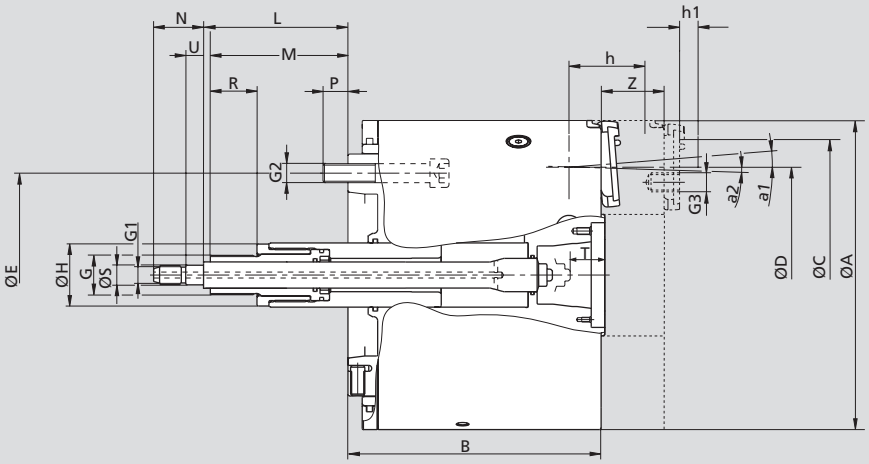

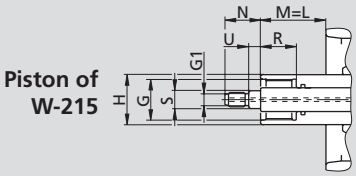

Piston of W-215

Subject to technical changes.
For more detailed information please ask our customer service.

SMW-AUTOBLOK Type		W-215		W-260		W-325		W-460	
Mounting		**A6**	**A8**	**A6**	**A8**	**A8**	**A11**	**A11**	**A15**
Chuck outside dia.	**A**	215		260		325		460	
Chuck height	**B**	176	211	238	213	285	251	344	309
In clamping position (radius)	**C**	R92		R115		R143		R205	
Max. clamping dia.	**D**	145		175		220		335	
	E	133.4	171.4	133.4	171.4	171.4	235	235	330.2
	G	M34 x 1.5		M33 x 1.5		M45 x 1.5		M85 x 2	
	G_1	M12		M16		M16		M55 x 2	
	G_2	M12	M16	M12	M16	M16	M20	M20	M24
	G_3	M12 x 20		M16 x 24		M20 x 30		M24 x 45	
	H	42		54		70		110	
Push rod face driver min./max.	**L**	55/40	20/5	96.5/51.5	121.5/106.5	106/91	140/125	119/104	154/139
Min./max.	**M**	55/-4	20/-39	96.5/26.5	121.5/51.5	106/26.8	140/60.8	119/24.4	154/56.5
	N	30		42		42		42	
	P	15.5	22	18	21	24	26	26	34
	R	30		45		50		50	
	S_{f6}	15		16.5		16.5		56.5	
Push rod pos. check dimension	**T**	22		29		46		60	
	U	10		15		15		15	
Axial movement/jaw carrier	**Z**	44		53		58		65	
Piston stroke for jaw clamping	**Z_1**	15		17		22		32.5	
Opening/residual stroke angle	**a_1/a_2**	4.5°/1.5°		4.5°/1.3°		4.5°/1.3°		5°/2°	
Opening/residual stroke at distance h1	h1	4.0/1.3		4.5/1.3		5.7/1.9		7.7/3.1	
Max. jaw stroke at distance h*	mm	5.3		5.8		7.6		10.8	
Max. compensating / jaw Type C	mm	± 0.6		± 1.0		± 1.5		± 3.3	
	b	30		36		44		52	
	d	65		78		96.5		150.5	
Reference height	h	50		57		72		88	
Oil volume horizontal use	l	0.25		0.50		0.75		1.50	
Oil volume vertical use	l	0.50		1.00		1.50		3.00	
Max. speed	r.p.m.	5000		4000		3200		1800	
Max. draw pull	kN	30		55		75		100	
Max. grip force at reference distance h*	kN	60		110		150		200	
Moment of inertia	kg·m²	0.236	0.271	0.639	0.606	1.872	1.734	9.35	8.91
Weight (without top jaws)	kg	40	45	75	70	140	127	364	336

* When exceeding distance h gripping force/speed must be reduced accordingly.

JAWS-CATALOG

Request or download: www.smw-autoblok.de

Shaft chuck Ø 215 - 460 mm

Ordering review

W

Shaft chuck with retractable jaw carrier
Face driver

Supply range:

Compensating clamping (Type C) chuck with mounting bolts and mounting keys, oil*

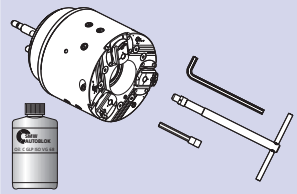

Spindle mounting \ Type C	W-215	W-260	W-325	W-460
A6	069930	069527		
A8	069932	069444	069525	
A11		069815	068981	069602
A15				069600

Supply range:

Self centering clamping (Type S) chuck with mounting bolts and mounting keys, oil*

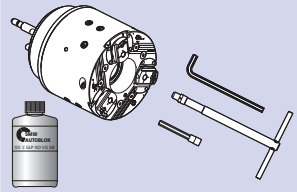

Spindle mounting \ Type S	W-215	W-260	W-325	W-460
A6	069934	069542		
A8	069936	069546	069552	
A11		069817	069554	069606
A15				069604

* **Attention:**
The W-chucks in this ordering review are for the use of power operated face drivers only (Type 1).
To use face drivers with spring loaded center, a different chuck (Type 2) has to be used.
Please ask our engineers for the corresponding Id. No. and the matching cylinders.
Power operated face drivers and face drivers with spring loaded center **cannot** be used alternating on the same chuck.

Attention:
Shaft chuck for vertical machines on request.

Actuating cylinder

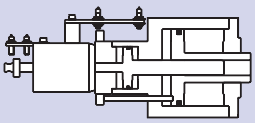

Double piston cylinder \ Type	W-215	W-260	W-325	W-460
ZHVD-SZ	**68-17**	**110-25**	**110-25/240-40**	**240-40**
Id. No.	044429	045297	045297/045298	045298
DCN			170-40/95-50	
Id. No.			33705215	

Oil

Oil for permanent oil bath lubrication	
Oil specification	**CGLP ISO VG 68**
Contents	**1 liter/1.05 quart (U.S.)**
Id. No.	**197859**

GSA

Shaft chuck with retractable jaw
Face driver

Shaft turning chuck Ø 200 - 480 mm

- Compensating jaw clamping
- Face driver with fixed or spring loaded center
- proofline® chucks = fully sealed – low maintenance

Application/customer benefits

- Complete machining of shafts in one operation
- The rough machining is done with compensating jaws clamping
- Finish machining of the complete outline with the face driver at retracted jaws

Technical features

- Retractable jaws
- Compensating jaws clamping
- Face driver adjustable with adjusting wedges
- Center point fixed or spring loaded
- Pull down of the workpiece to the axial reference, ensures high position accuracy
- Case hardened internal parts
- Constant grease lubrication
- **proofline® chucks** = fully sealed – low maintenance

Standard equipment

Shaft chuck without face driver
with mounting bolts

Axial reference in the center point - power operated face driver
Actuation via double piston cylinder type ZHVD-SZ or DCN

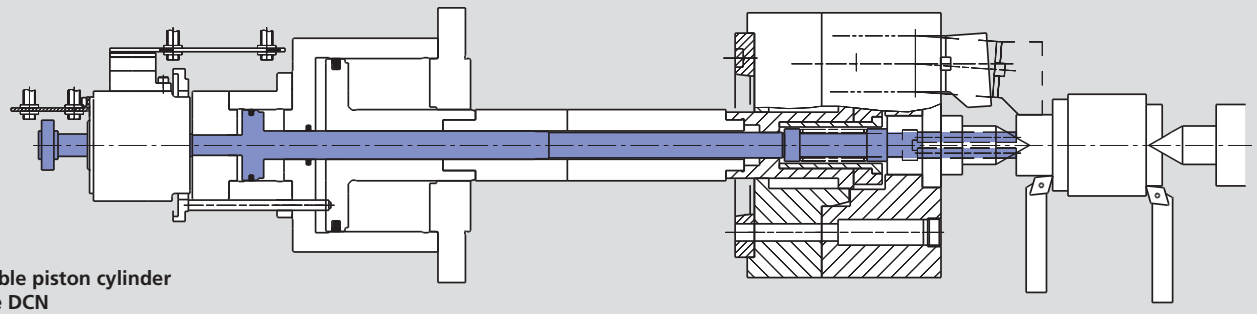

Double piston cylinder
Type DCN

Axial reference on the component face - spring operated face driver
Actuation via long stroke cylinder type SIN-L

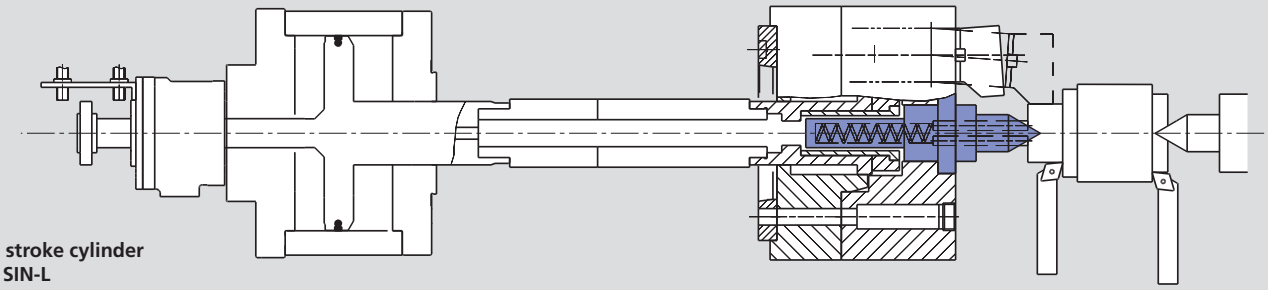

Long stroke cylinder
Type SIN-L

Technical data

SMW-AUTOBLOK Type		GSA 200	GSA 260	GSA 320	GSA 480
Number of jaws		3	3	3	3
Angular jaw stroke U°	deg.	5°	5°	5°	5°
Radial jaw stroke at distance **h**	mm	9	10	11.5	15
Compensation at distance **h**	mm	±0.8	±1	±1	±4.5
Wedge stroke (total)	mm	57.5	66.5	77.6	103,9
Max. draw-push	kN	40	60	80	200
Max. gripping force at distance **h**	kN	40	65	100	240
Max. speed	r.p.m.	4500	4000	3200	1600
Weight (without top jaws)	kg	30	55	100	420
Moment of inertia	kg·m²	0.15	0.46	1.28	11
Recommended actuating cylinders: **- Axial reference in the center bore**		**DCN 125/30 70/25**	**DCN 125/30 70/25**	**DCN 125/30 87/40** **DCN 170/40 95/50**	**ZHVD-SZ 240-40**
- Axial reference on the component face		**SIN-L 125**	**SIN-L 150**	**SIN-L 150**	**SIN-L 250**

Shaft turning chuck Ø 200 - 480 mm

- Compensating jaw clamping
- Face driver with fixed or spring loaded center
- proofline® chucks = fully sealed – low maintenance

GSA

Shaft chuck with retractable jaw
Face driver

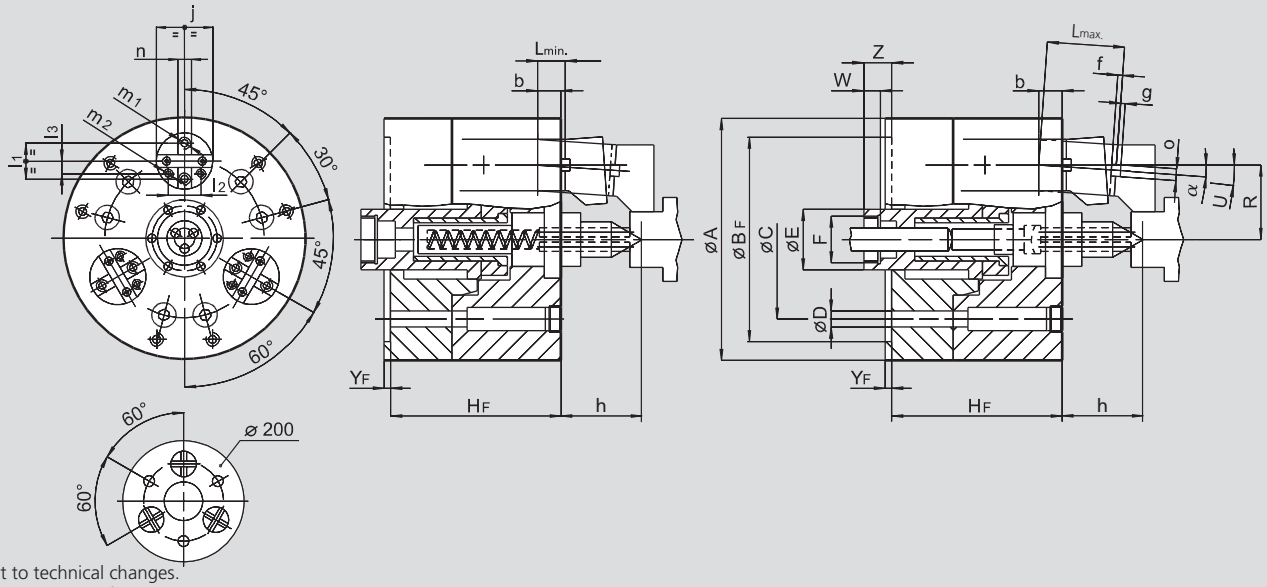

Subject to technical changes.
For more detailed information please ask our customer service.

SMW-AUTOBLOK Type			GSA 200	GSA 260	GSA 320	GSA 480
	A	mm	200	260	320	480
	BF H6	mm	170	220	280	380
	C	mm	146	171.4	235	330.2
	D	mm	17	17	21	25
	E	mm	50	61	75	105
	F	mm	M38 x 1.5	M50 x 1.5	M56 x 2	M75x2
	HF	mm	160	183	215	356
	Lmin.	mm	24	25	33	55
	max.	mm	74	83	98	135
	R	mm	60	75	102.5	153
Jaw pivoting	**U**	deg.	5°	5°	5°	5°
	W	mm	18	18	18	30
	YF	mm	6	6	6	18
Min.	**Z**	mm	25	27	15.4	27
Max.	**Z**	mm	82.5	93.5	93	131
	b	mm	24	25	32	58
	f	mm	4	5	5	7
	g	mm	3	3.5	3	6
Reference distance	**h**	mm	80	90	105	115
	j	mm	48	55	65	95
	l1	mm	32	35	42	66
	l2	mm	27	32	35	53
	l3	mm	12	12.5	16	25
	m1	mm	M10	M12	M16	M16
	m2	mm	M8	M10	M12	M16
	n H7	mm	12.68	12.68	12.68	19.03
	o h7	mm	12.68	12.68	12.68	19.03
	α	deg.	3.5°	3.5°	3.5°	3.5°

ISO-A flanges for GSA chucks

FF 1
Direct
ISO-A mounting

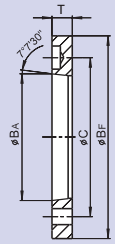

FF 2
Reduction
ISO-A mounting

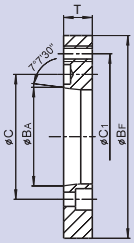

FF 3
Increase
ISO-A mounting

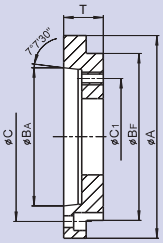

GSA chuck	Spindle	Type	Id. No.	A	BF	BA	C	C1	T
200	A5	2	24152050	-	170	82.563	104.8	146	24
200	A6	2	24162050	-	170	106.375	133.4	146	24
200	A8	3	24182050	210	170	139.719	171.4	146	40
260	A6	2	24162530	-	220	106.375	133.4	171.4	24
260	A8	1	24182500	-	220	139.719	171.4	-	19
260	A11	3	24112510	280	220	196.869	235	171.4	45
320	A8	2	24183500	-	280	139.719	171.4	235	30
320	A11	1	24113500	-	280	196.869	235	-	21
480	A11	2	24115000	-	380	196.869	235	330.2	40
480	A15	1	24125000	-	380	285.775	330.2	-	23

SMW-AUTOBLOK
259

ACS-E 3

Self centering column chuck

Self-centering column chucks with pull down Ø 110 - 350 mm

- **Pull down**
- **Power operated via standard cylinders**
- **O.D. clamping**

Application/customer benefits

- For small, medium and large quantities at high precision
- Pull down of the workpiece to the axial workstop during clamping
- Minimum loss of gripping force at high speed
- Standard, hardened jaw blanks available

Technical features

- Chuck body completely case hardened
- Openings in the chuck body to evacuate chips
- Central bore for coolant/air

Standard equipment

3-jaw chuck
Mounting bolts

Ordering example

3-jaws-column chuck
with center mounting Z170
type ACS-E 220-3-Z170

Actual gripping force diagram

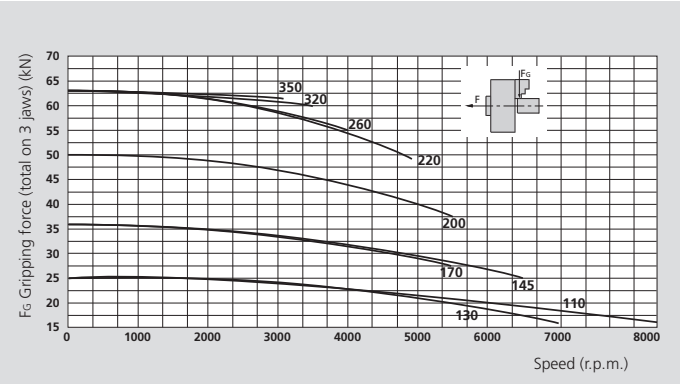

The diagrams refer to standard jaw blanks, machined to 50 % of their mass.

Technical data

SMW-AUTOBLOK Type		ACS-E 3 110	ACS-E 3 130	ACS-E 3 145	ACS-E 3 170	ACS-E 3 200	ACS-E 3 220	ACS-E 3 260	ACS-E 3 320	ACS-E 3 350
Jaw stroke	mm	2.6	2.6	2.6	2.6	2.6	3.2	4	6	6
Piston stroke	mm	10	10	10	10	10	12	15	15	15
Actuating force max.	kN	10	10	15	15	20	25	25	35	35
Grip force max.	kN	25	25	36	36	50	63	63	63	63
Speed max.	r.p.m.	8000	7000	6500	6300	5500	4900	4300	3400	3100
Weight	kg	5	12	14	17	30	35	50	75	90
Moment of inertia	kg·m²	0.07	0.02	0.03	0.06	0.16	0.21	0.35	0.84	1
Clamping range	min.	4	10	20	30	30	50	90	90	120
Clamping range	max.	45	50	70	95	100	125	165	215	245
Rec. actuating cylinders	**Type**	**SIN-S 70**	**SIN-S 70**	**SIN-S 70**	**SIN-S 85**	**SIN-S 100**	**SIN-S 125**	**SIN-S 125**	**SIN-S 125**	**SIN-S 125**
Rec. actuating cylinders	**Type**	**SIN-S 85**	**SIN-S 85**	**SIN-S 85**	**SIN-S 100**	**SIN-S 125**	**SIN-S 150**	**SIN-S 150**	**SIN-S 150**	**SIN-S 150**
Chuck	Id. No.	77690111	77690113	77690114	77690117	77690120	77690122	77690125	77690132	77690135
Jaw blanks	Id. No.	69731110	69761310	69761410	69761710	69762010	69762210	69762210	69763210	69763210

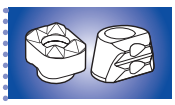

SMW-AUTOBLOK 400

SMW-AUTOBLOK 394

SMW-AUTOBLOK 259

Self-centering column chucks with pull down Ø 110 - 350 mm

- Pull down
- power operated via standard cylinders
- O.D. clamping

ACS-E 3

Self centering column chuck

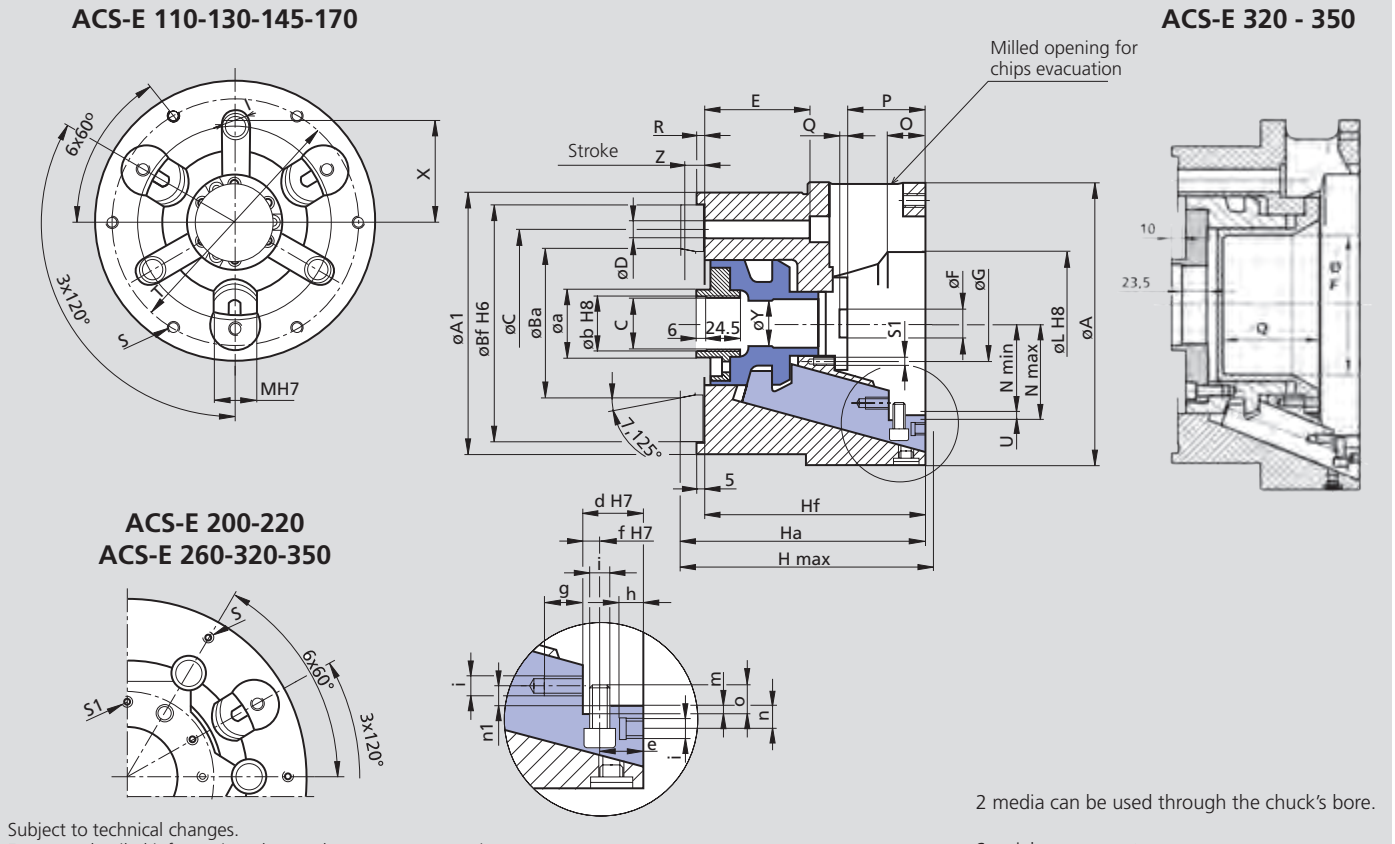

Subject to technical changes.
For more detailed information please ask our customer service.

2 media can be used through the chuck's bore.

Specials on request.

SMW-AUTOBLOK Type			ACS-E 3 110	ACS-E 3 130	ACS-E 3 145	ACS-E 3 170	ACS-E 3 200	ACS-E 3 220	ACS-E 3 260	ACS-E 3 320	ACS-E 3 350
Mounting			ISO-* Z90	ISO-A4 Z115	ISO-A4 Z115	ISO-A5 Z140	ISO-A6 Z170	ISO-A6 Z170	ISO-A8 Z220	ISO-A11 Z280	ISO-A11 Z280
	A/A1	mm	112/100	130/130	145/130	170/155	200/185	220/185	260/235	324/300	354/300
	Ba	mm	-	63.513	63.513	82.563	106.375	106.375	139.719	196.869	196.869
	Bf	mm	90	115	115	140	170	170	220	280	280
	C	mm	70	82.6	82.6	104.8	133.4	133.4	171.4	235	235
	D	mm	3x8.5	3x11	3x11	3x11	6x13	6x13	6x17	6x21	6x21
	E	mm	48	64	64	65	75	75	91	97	97
	F	mm	-	-	16	20	20	30	70	105	131
	G	mm	38	-	40	65	54	68	107	154	184
	H max.	mm	-	130	130	140	179	183	198.5	200.5	200.5
	Ha	mm	-	125	125	135	174	177	191	193	193
	Hf	mm	95	112	112	120	157	160	172	172	172
	I	mm	-	20	20	20	-	-	-	-	-
	L	mm	52	55	75	98	102	126	167	217	247
	M	mm	18	20	20	20	30	30	30	30	30
	N min./max.	mm	30.2/32.8	33.7/36.3	43.7/46.3	56.2/58.8	63.7/66.3	73.4/76.6	93/97	117/123	132/138
	O	mm	22.5	26.5	26.5	26.5	32	33	34	33	33
	P	mm	25	30	29	29	55	50.5	40	38	38
	Q	mm	-	-	5	5	7	7	65.5	91.5	91.5
	R	mm	15	18	18	4.5	4.5	3.5	2	6	6
	S	mm	6xM5	6xM6	6xM6	6xM6	6xM8	6xM8	6xM8	12xM8	12xM8
	S1	mm	-	-	3xM5	6xM5	6xM6	6xM6	6xM6	6xM8	6xM8
	T	mm	90	115	115	145	175	190	226	290	320
Stroke	U	mm	2.6	2.6	2.6	2.6	2.6	3.2	4	6	6
Stroke	Z	mm	10	10	10	10	10	12	15	15	15
	X	mm	-	41.3	41.3	52.4	-	-	-	-	-
	W	mm	4	5	5	5	5	5	5	6	6
	a	mm	28	36	36	48	48	48	48	86	86
	b	mm	22	29	29	39	39	39	39	76	76
	c	mm	M20x1.5	M28x1.5	M28x1.5	M38x1.5	M38x1.5	M38x1.5	M38x1.5	M75x2	M75x2
	d	mm	18	20	20	20	25	25	25	25	25
	e	mm	13	14	14	14	18	18	18	18	18
	f	mm	5	6	6	6	7	7	7	7	7
	g	mm	12	12	12	12	16	16	16	16	16
	h	mm	8	-	-	-	9	9	9	9	9
	i	mm	M6	M6	M6	M6	M8	M8	M8	M8	M8
	m	mm	3.5	3.5	3.5	3.5	3.5	3.5	3.5	3.5	3.5
	n	mm	9	7.5	7.5	7.5	10	10	10	10	10
	n1	mm	5	6.5	6.5	6.5	8.5	8.5	8.5	8.5	8.5
	o	mm	8.5	8.5	8.5	8.5	9	9	9	9	9
	y	mm	10.5	12.5	14	32	32	32	32	115	115

* Flange ISO-A on request

ACS-E 6

Self centering column chuck

Self-centering column chucks with pull down Ø 200 - 450 mm

- Pull down
- power operated via standard cylinders
- O.D. clamping

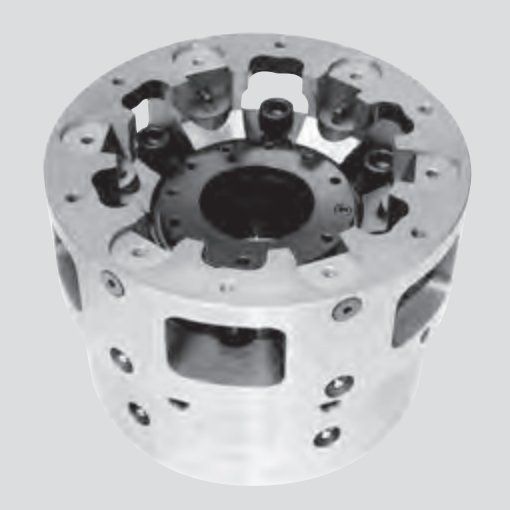

Application/customer benefits

- For small, medium and large quantities at high precision
- Pull down of the workpiece to the axial workstop during clamping
- Minimum loss of gripping force at high speed
- Standard, hardened jaw blanks available

Technical features

- Chuck body completely case hardened
- Openings in the chuck body to evacuate chips
- Central bore for coolant/air

Standard equipment

6-jaw chuck
Mounting bolts

Ordering example

6-jaw-column chuck
with center mounting Z170
type ACS-E 6 220 Z170

Actual gripping force diagram

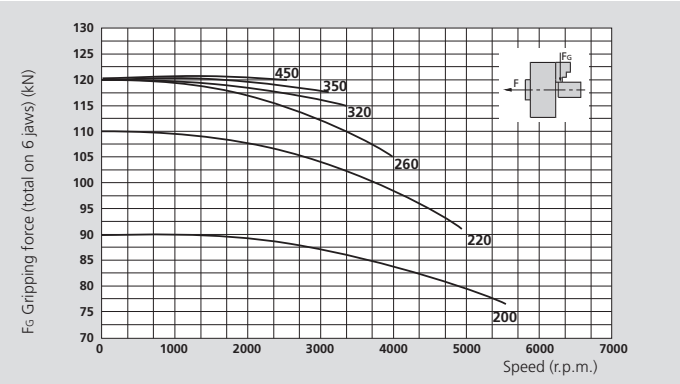

The diagrams refer to standard jaw blanks, machined to 50 % of their mass.

Technical data

SMW-AUTOBLOK Type		ACS-E 6 200	ACS-E 6 220	ACS-E 6 260	ACS-E 6 320	ACS-E 6 350	ACS-E 6 450
Jaw stroke	mm	2.6	3.2	4	6	6	6
Piston stroke	mm	10	12	15	15	15	15
Actuating force max.	kN	40	50	50	65	65	65
Grip force max.	kN	90	110	120	120	120	120
Speed max.	r.p.m.	5500	4900	4300	3400	3100	2200
Weight	kg	30	35	50	75	90	130
Moment of inertia	kg·m²	0.16	0.21	0.35	0.84	1	3
Clamping range	min.	30	50	90	90	120	210
Clamping range	max.	100	125	165	215	245	335
Rec. actuating cylinders	**Type**	**SIN-S 100**	**SIN-S 125**	**SIN-S 125**	**SIN-S 125**	**SIN-S 125**	**SIN-S 125**
Rec. actuating cylinders	**Type**	**SIN-S 125**	**SIN-S 150**	**SIN-S 150**	**SIN-S 150**	**SIN-S 150**	**SIN-S 150**
Chuck	Id. No.	77690420	77690422	77690425	77690432	77690435	77690445
Jaw blanks	Id. No.	69762040	69762240		69763210		

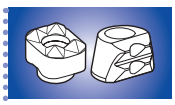

SMW-AUTOBLOK 400

SMW-AUTOBLOK 394

SMW-AUTOBLOK 259

Self-centering column chucks with pull down Ø 200 - 450 mm

- Pull down
- Power operated via standard cylinders
- O.D. clamping

ACS-E 6

Self centering column chuck

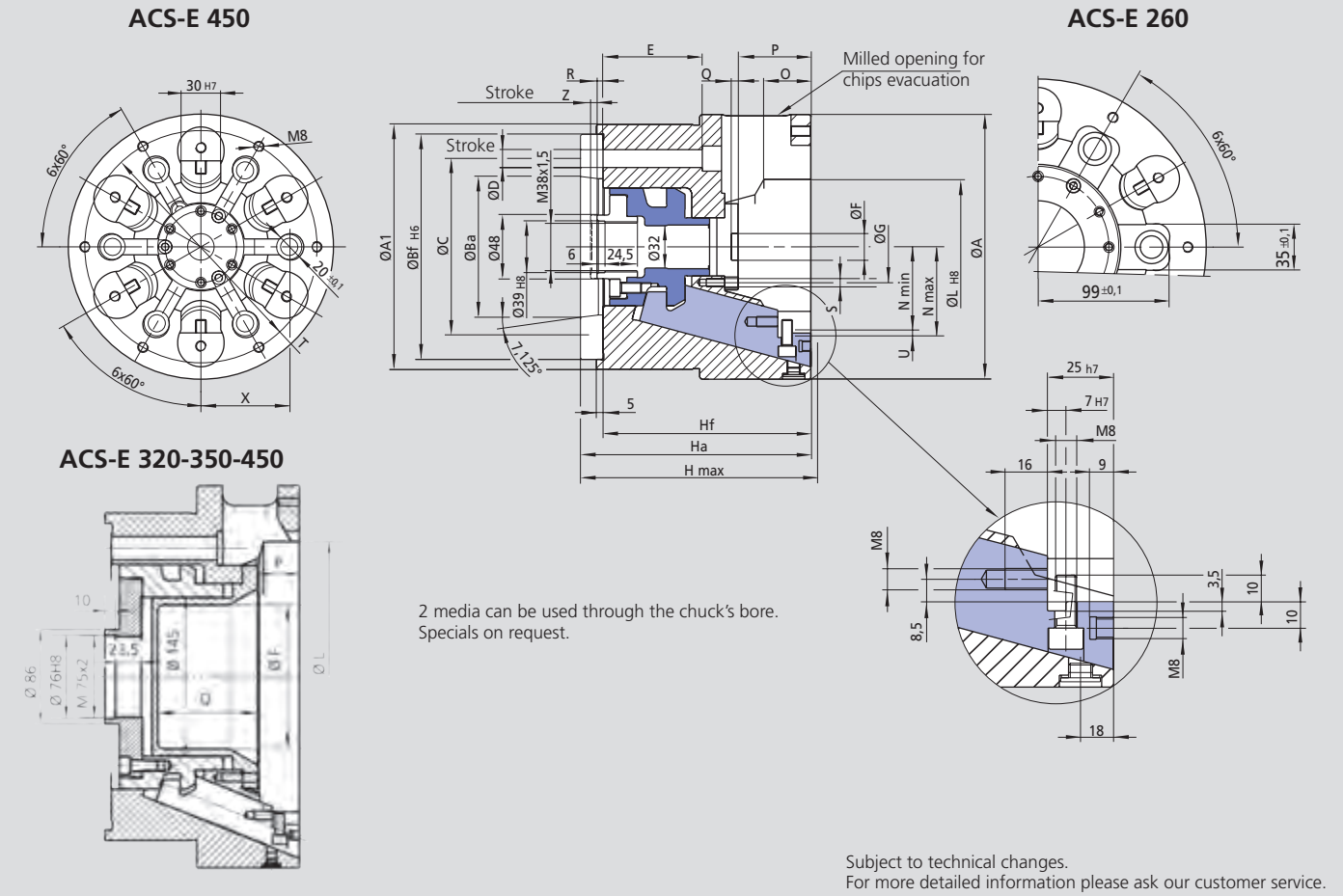

SMW-AUTOBLOK Type			ACS-E 6 200	ACS-E 6 220	ACS-E 6 260	ACS-E 6 320	ACS-E 6 350	ACS-E 6 450
Mounting			ISO-A6 Z170	ISO-A6 Z170	ISO-A8 Z220	ISO-A11 Z280	ISO-A11 Z280	ISO-A15 Z380
	A	mm	200	220	260	324	354	450
	A1	mm	185	185	235	300	300	410
	Ba	mm	106.375	106.375	139.719	196.869	196.869	285.775
	Bf	mm	170	170	220	280	280	380
	C	mm	133.4	133.4	171.4	235	235	330.2
	D	mm	13	13	17	21	21	25
	E	mm	75	75	91	97	97	97
	F	mm	20	30	70	105	131	180
	G	mm	54	68	107	154	184	270
	H max.	mm	179	183	198.5	200.5	200.5	200.5
	Ha	mm	174	177	191	193	193	195
	Hf	mm	157	160	172	172	172	172
	L	mm	102	126	167	217	247	336
	N min.	mm	66.3	76.6	97	123	138	182
	N max.	mm	63.7	73.4	93	117	132	176
	O	mm	32	33	34	33	33	33
	P	mm	55	50.5	40	38	38	38
	Q	mm	7	7	65.5	91.5	91.5	90
	R	mm	4.5	3.5	2	6	6	6
	S	mm	6xM6	6xM6	6xM6	6xM6	6xM6	6xM6
	T	mm	175	190	226	290	320	405
Stroke	U	mm	2.6	3.2	4	6	6	6
Stroke	Z	mm	10	12	15	15	15	15
	X	mm	66.7	72	-	-	-	-
	W	mm	5	5	5	6	6	6

ACS-I 3/6

Self centering
column chuck

Self-centering column chucks with pull down Ø 130 - 300 mm

- Pull down
- Power operated via standard cylinders
- I.D. clamping

Application/customer benefits

- For small, medium and large quantities at high precision
- Pull down of the workpiece to the axial workstop during clamping
- Minimum loss of gripping force at high speed
- Standard, hardened jaw blanks available

Technical features

- Chuck body completely case hardened
- Openings in the chuck body to evacuate chips
- Central bore for coolant/air

Standard equipment

3 or 6-jaw chuck
Mounting bolts

Ordering example

3-jaw-column chuck
with center mounting Z115
type ACS-I 130-3-Z-115

Actual gripping force diagram

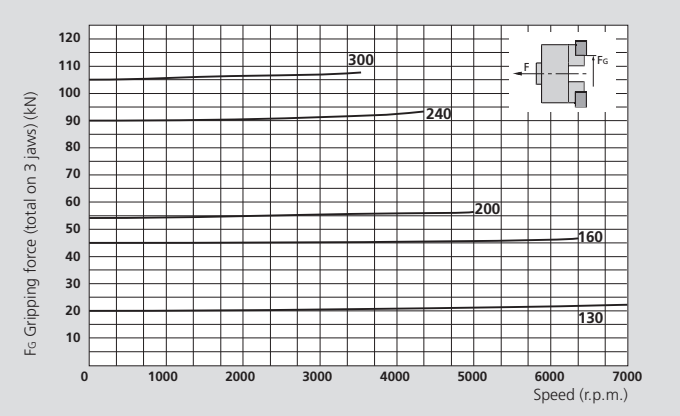

The diagrams refer to standard jaw blanks, machined to 50 % of their mass.

Technical data

SMW-AUTOBLOK Type		ACS-I 130	ACS-I 160	ACS-I 200	ACS-I 240	ACS-I 300
Number of jaws		**3**	**3**	**3**	**6**	**6**
Jaw stroke	mm	2.6	4.4	4.4	4.4	4.4
Piston stroke	mm	10	11	11	11	11
Actuating force max.	kN	10	25	30	50	60
Grip force max.	kN	20	45	54	90	105
Speed max.	r.p.m.	7000	6300	5000	4300	3500
Weight	kg	10	12	20	30	55
Moment of inertia	kg·m²	0.02	0.03	0.1	0.2	-
Clamping range	min.	65	92	110	144	210
Clamping range	max.	100	140	200	232	280
Rec. actuating cylinder	**Type**	**SIN-S 70**	**SIN-S 85**	**SIN-S 100**	**SIN-S 125**	**SIN-S 125**
Rec. actuating cylinder	**Type**	**SIN-S 85**	**SIN-S 100**	**SIN-S 125**	**SIN-S 150**	**SIN-S 150**
Chuck	Id. No.	77690613	77690616	77690620	77690624	77690930
Jaw blanks	Id. No.	69761360	69761660	69762060	69762490	69763090

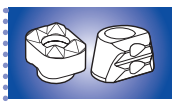

SMW-AUTOBLOK
400

SMW-AUTOBLOK
394

SMW-AUTOBLOK
259

Self-centering column chucks with pull down Ø 130 - 300 mm

- Pull down
- Power operated via standard cylinders
- I.D. clamping

ACS-I 3/6

Self centering column chuck

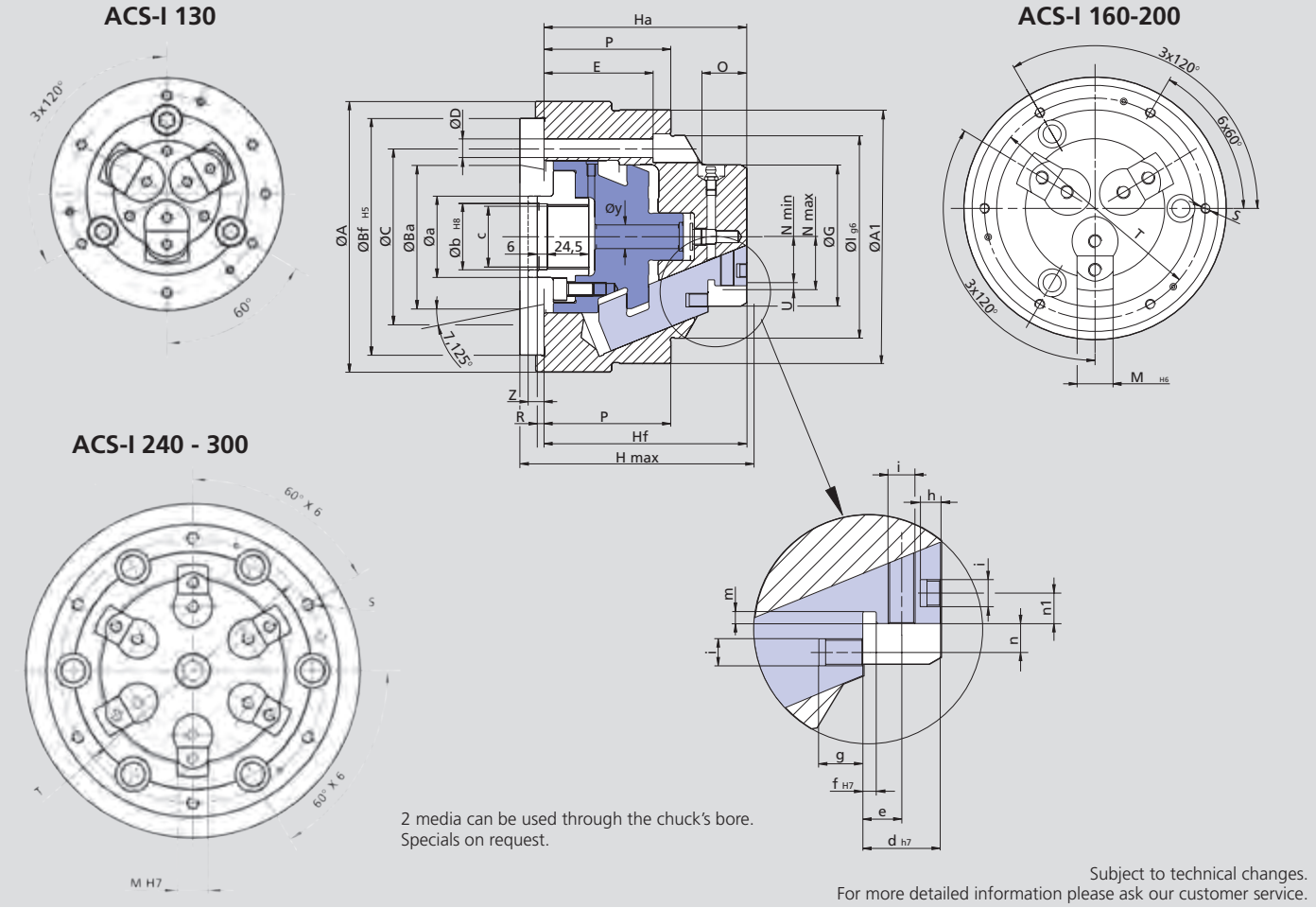

2 media can be used through the chuck's bore.
Specials on request.

Subject to technical changes.
For more detailed information please ask our customer service.

SMW-AUTOBLOK Type			ACS-I 3 130	ACS-I 3 160	ACS-I 3 200	ACS-I 6 240	ACS-I 6 300
Number of jaws			3	3	3	6	6
Mounting			ISO-A4 Z115	ISO-A5 Z140	ISO-A6 Z170	ISO-A8 Z220	ISO-A11 Z280
	A/A1	mm	130/130	160/150	200/170	240/210	300/275
	Ba	mm	63.513	82.563	106.375	139.719	196.869
	Bf	mm	115	140	170	220	280
	C	mm	82.6	104.8	133.4	171.4	235
	D	mm	11	11	13	17	21
	E	mm	55	64.5	62	68.5	64.5
	G	mm	59.5	85	103	136	200
	Hmax.	mm	130	140.5	147.5	154.5	156.5
	Ha	mm	125	135	142	149	151
	Hf	mm	112	120	125	130	130
	I	mm	90	120	140	170	232
	M	mm	24	22	22	22	22
	N min./max.	mm	19.2/21.8	26.8/31.2	36.3/40.7	52.8/57.2	84.8/89.2
	O	mm	27.5	26.5	27	27	27
	P	mm	67	75	80	85	85
	R	mm	18	4	4	4	8
	S	mm	M6	M6	M6	M8	M8
	T	mm	110	135	155	190	255
Stroke	U	mm	2.6	4.4	4.4	4.4	4.4
Stroke	Z	mm	10	11	11	11	11
	a	mm	36	48	48	48	86
	b	mm	29	39	39	39	76
	c	mm	M28x1.5	M38x1.5	M38x1.5	M38x1.5	M75x2
	d	mm	20	23	23	23	23
	e	mm	9.5	11.5	11.5	11.5	11.5
	f	mm	4	4	4	4	4
	g	mm	12	13	13	13	13
	h	mm	-	6	6	6	6
	i	mm	M6	M8	M8	M8	M8
	m	mm	3.5	3.5	3.5	3.5	3.5
	n	mm	7.5	8.5	8.5	8.5	8.5
	n1	mm	7.5	9	9	9	9
	y	mm	14	14	32	32	115

ACS-E Jaws

Hard jaw blanks O.D. clamping

■ For 3 and 6 jaw chucks

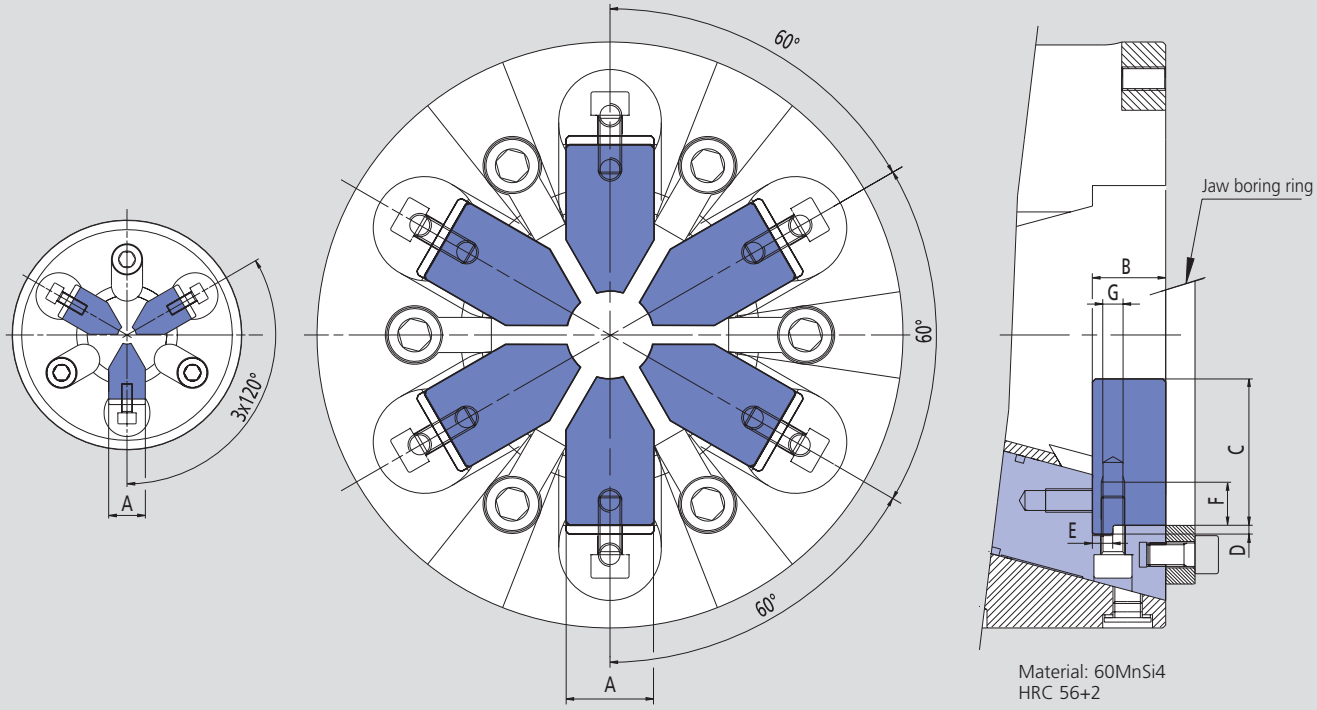

Subject to technical changes.
For more detailed information please ask our customer service.

Technical data

SMW-AUTOBLOK Type ACS-E		110	130	145	170	200	220	260	320	350	450
Number of jaws		**3**	**3**	**3**	**3**	**3 / 6**	**3 / 6**	**3 / 6**	**3 / 6**	**3 / 6**	**3 / 6**
	A h6	18	20	20	20	30	30	30	30	30	30
	B	18	20	20	20	25	25	25	25	25	25
	C	29.5	30	35	40	50	50	50	75	75	75
	D	3	3	3	3	3	3	3	3	3	3
	E g6	5	6	6	6	7	7	7	7	7	7
	F	13	13	13	13	15	15	15	15	15	15
	G	M6	M6	M6	M6	M8	M8	M8	M8	M8	M8
Rec. clamping range	**min.**	4	10	20	30	30	50	90	90	120	208
Rec. clamping range	**max.**	45	50	70	95	100	125	165	215	245	335
Jaw blanks (1 set = 3 pcs.)	Id. No.	69761110	69761310	69761410	69761710	69762010*	69762210*	69762210*	69763210*	69763210*	-
Boring ring	Id. No.	69111110	69111310	69111410	69111710	69112040	69112240	69112540	69113240	69113540	69114540

* For 6 jaw chucks use 2 set of 3 pcs.

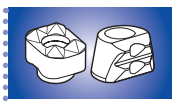
SMW-AUTOBLOK 400

SMW-AUTOBLOK 394

SMW-AUTOBLOK 259

Hard jaw blanks I.D. clamping

■ For 3 and 6 jaw chucks

ACS-I Jaws

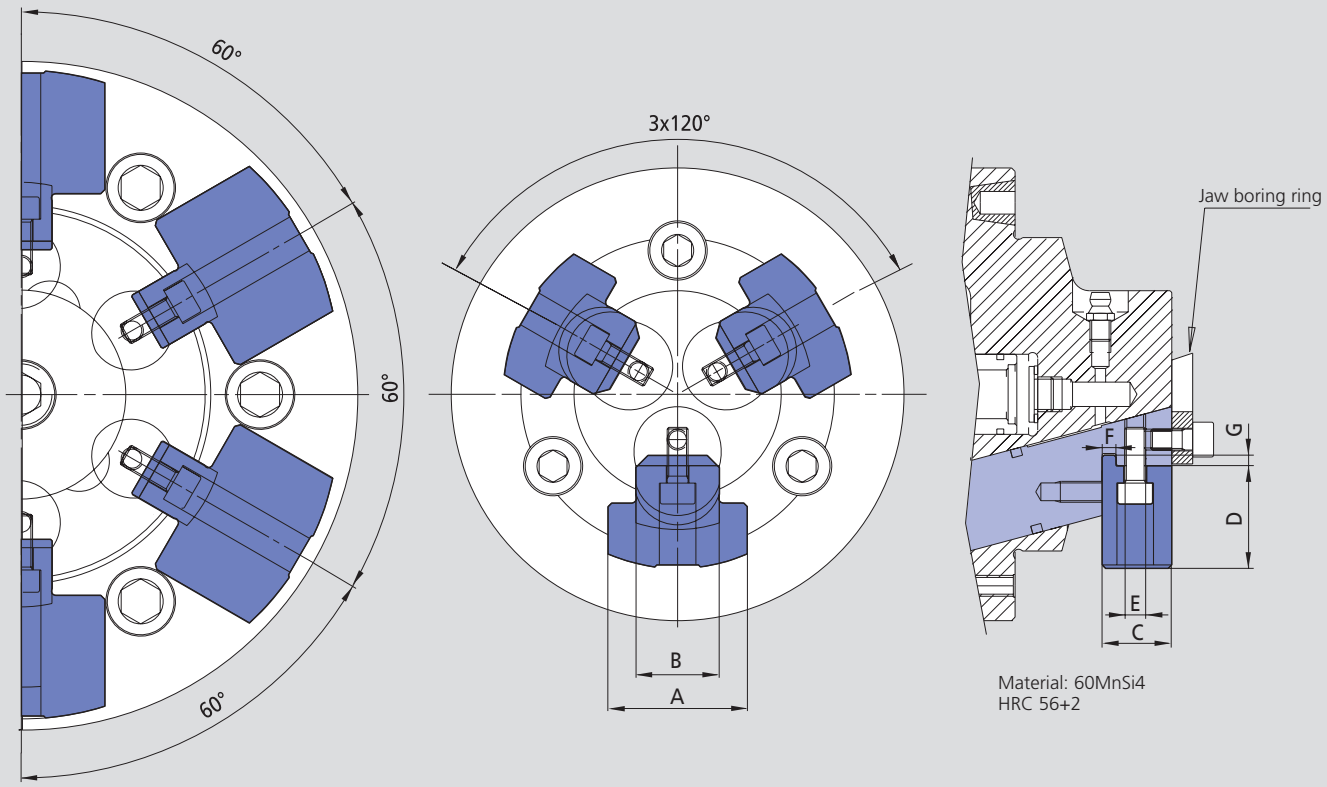

Subject to technical changes.
For more detailed information please ask our customer service.

SMW-AUTOBLOK Type		ACS-I 130	ACS-I 160	ACS-I 200	ACS-I 240	ACS-I 300
Number of jaws		**3**	**3**	**3**	**6**	**6**
	A	40	40	60	60	60
	B h6	24	22	22	22	22
	C	20	23	23	23	23
	D	29.5	41	61.5	61.5	53
	E	3xM6	3xM8	3xM8	3xM8	6xM8
	F g6	4	4	4	4	4
	G	3	3	3	3	3
Rec. clamping range	**min.**	65**	92	110	144	210
Rec. clamping range	**max.**	100	140	200	232	280
Jaw blanks (set of 3 or 6)	Id. No.	69761360	69761660*	69762060*	69762490*	69763090*
Boring ring	Id. No.	69111360	69111660	69112060	69112490	69113090

* Identical for size 160-200-240-300
** Min. 60 with special jaws

ACS-E

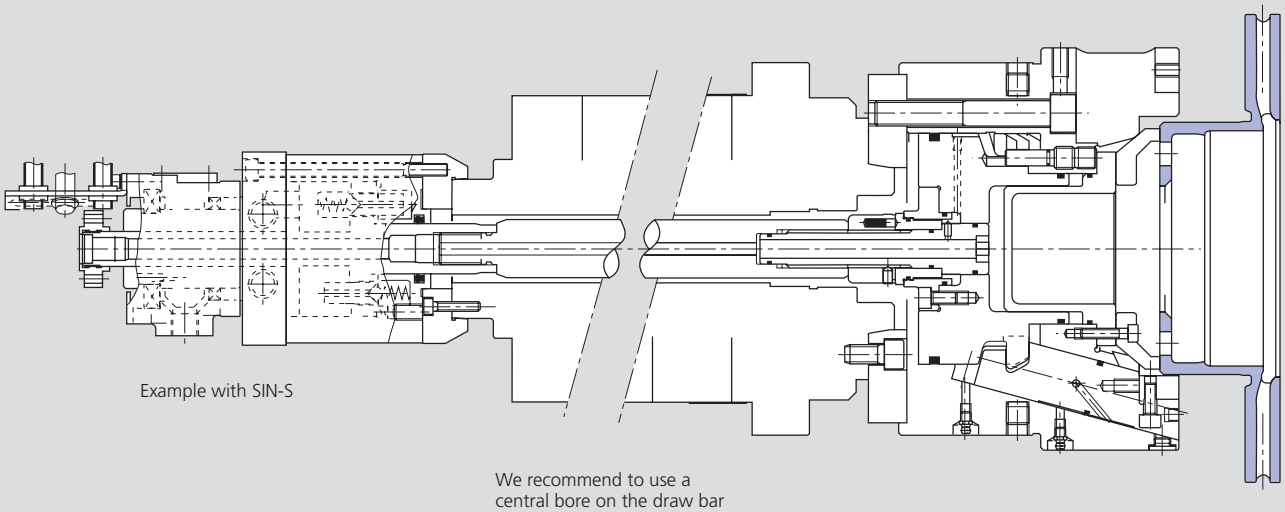

Subject to technical changes.
For more detailed information please ask our customer service.

ACS-I

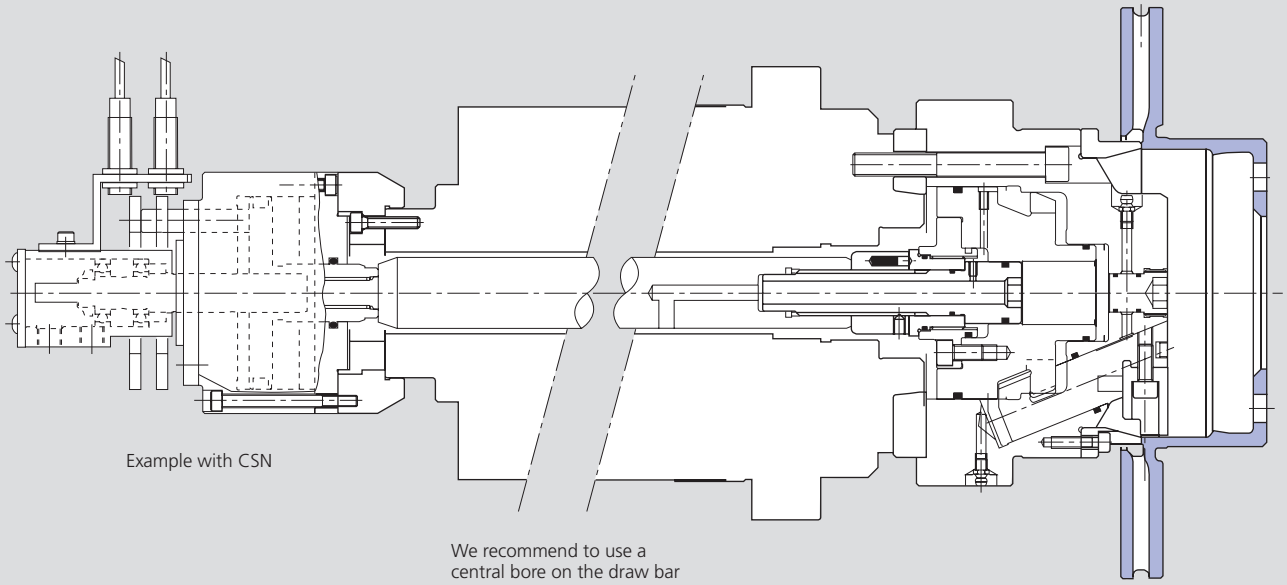

Subject to technical changes.
For more detailed information please ask our customer service.

Diaphragm chucks

Page 214

D

Diaphragm chuck – quick jaw change

- Ø 210 - 315 mm
- O.D. or pitch line clamping
- Centrifugal force compensation
- **proofline® chucks** = fully sealed – low maintenance

Page 217

SIN-DFR

Closed center
Rotating hydraulic cylinder

- Special cylinder to actuate diaphragm chuck
- Up to 70 bar
- Large piston area for opening
  small piston area for clamping
- Central bore for air/coolant, 1 or 2 media
- Stroke control via LPS-XS

Page 218

D-KOMBI®

Diaphragm chuck with pull-down fingers
jaw/pull-down finger quick change

- Ø 210 - 400 mm
- Radial and axial clamping
- Flat gripping force curve
- **proofline® chucks** = fully sealed – low maintenance

Page 221

ZHVD-DFR

Double piston
Rotating hydraulic cylinder

- Special cylinder to actuate diaphragm KOMBI chucks
- Up to 60 bar
- 1 piston for actuating diaphragm
- 1 piston for actuating axial clamping
- Central bore for air/coolant, 1 or 2 media
- Stroke control via 2 x LPS-X

Page 222

D-PLUS

Diaphragm chuck – open center

- Ø 260 - 315 mm
- Radial O.D. or pitch line clamping
- With through hole
- Centrifugal force compensation
- **proofline® chucks** = fully sealed – low maintenance

Page 224

D-Vario

Diaphragm chuck

- Ø 215 mm
- Radial fine adjustment of the center line
- Key Lock System = Quick positioning of jaws
  for gears with different number of teeth
- Modular system with jaws for pitch line or
  outside clamping
- **proofline® chucks** = fully sealed – low maintenance

D-Vario Configurator

free application to configurate
your set up

www.smw-autoblok.de

Page 231

RU-2-20

Rotary union for 2 media for
double piston rotating cylinder ZHVD-DFR

- Universal for air, oil or coolant

5

Diaphragm clamping technology with quick jaw change at its best – for hard turning, grinding, high precision turning

D-210® • D-260 • D-315

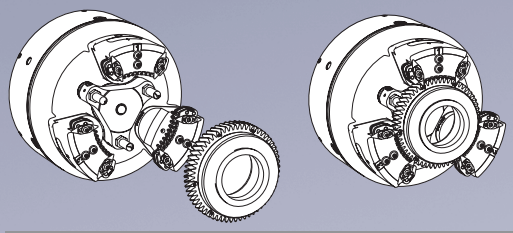

Operation of diaphragm system

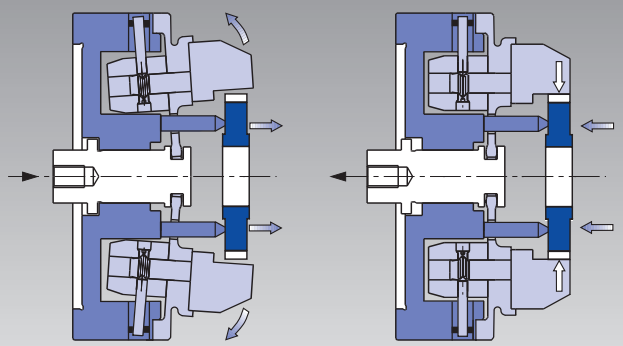

The ultimate, easy principle:

The operation is based on elastic deformation of the diaphragm - this means
- no sliding parts
- no friction
- centrifugal force compensation
- **proofline® series** = fully sealed – low maintenance

Jaws are factory finished and match any chuck with no loss of concentricity.

Never, ever grind or bore jaws on the chuck!
TIR < 0.020 mm

Setup time < 4 minutes

for jaws and locators
TIR < 0.020 mm without boring/grinding

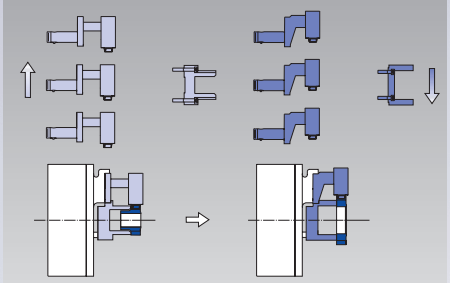

Ideal for PICK-UP machines

Radial access for quick change mechanism

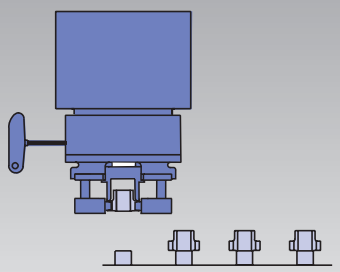

Media feed

Air sensing + air blow/coolant

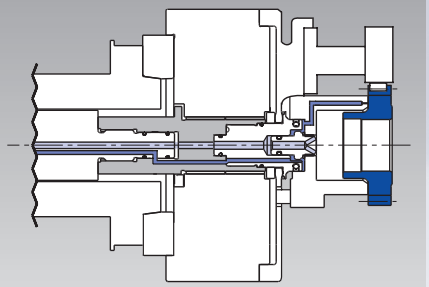

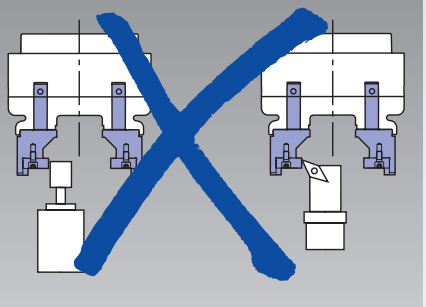

Never, ever grind or bore jaws on the chuck.

Full interchangeability of the jaws

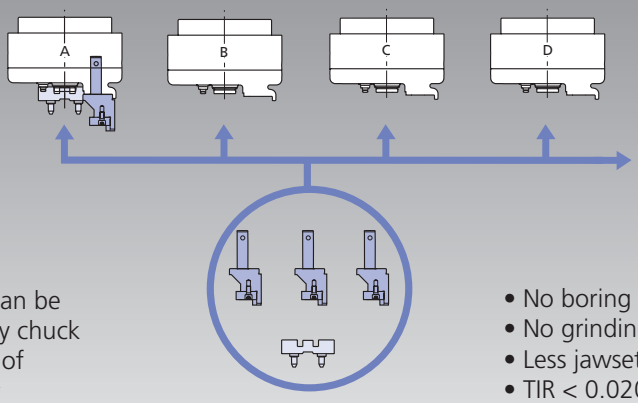

Any jawset can be put on to any chuck without loss of concentricity

- No boring
- No grinding
- Less jawsets needed
- TIR < 0.020 mm

Clamping glossary

ABS® connection: A connecting system, developed by the Komet company for highest rigidity and accuracy. A version of this proven design is used for the quick jaw change on the **Type D** chuck.

Centrifugal force compensation: Underneath the diaphragm, counter balance weights are mounted which are connected to the clamping jaws. They completely compensate the centrifugal force caused by the jaws.

Roller cage clamping: Floating rollers are held in a roller cage. They extend from the location face of the clamping insert. In principle the workpiece is clamped like an external clamping but the steel rollers clamp in the pitch line. Special jaws with roller cages have been developed for the **Type D**. Since the clamping force is spread equally onto multiple tooth gaps easily deformed components can be clamped with less distortion.

Air sensing: Air is fed through the contact face of the work stop. When the workpiece is in contact with the work stop the airflow is stopped and converts into a signal. If the component is not correctly positioned or is lifted, the machine can not start or the spindle is stopped. This important feature is standard on all **Type D** chucks.

Medium supply: Coolant or air to clean/cool during the machining process come through the machine spindle/chuck. This important feature is standard on all **Type D** chucks.

Diaphragm clamping technology: It is based on the elastic deformation of the diaphragm (like a large belleville washer). There are no sliding parts and the mechanism is completely maintenance free. The specially and patented diaphragm of the **Type D** allows a constant fine regulatable clamping force with the highest precision.

Pre-locaters: These protect the clamping pins during engagement into the serration especially during automatic loading.

Pitch line clamping: Clamping gears in the pitch line with clamping pins, the radial datum for the bore to be machined is the pitch line. According to the application and customers request jaws with clamping pins to clamp in the pitch line are offered.

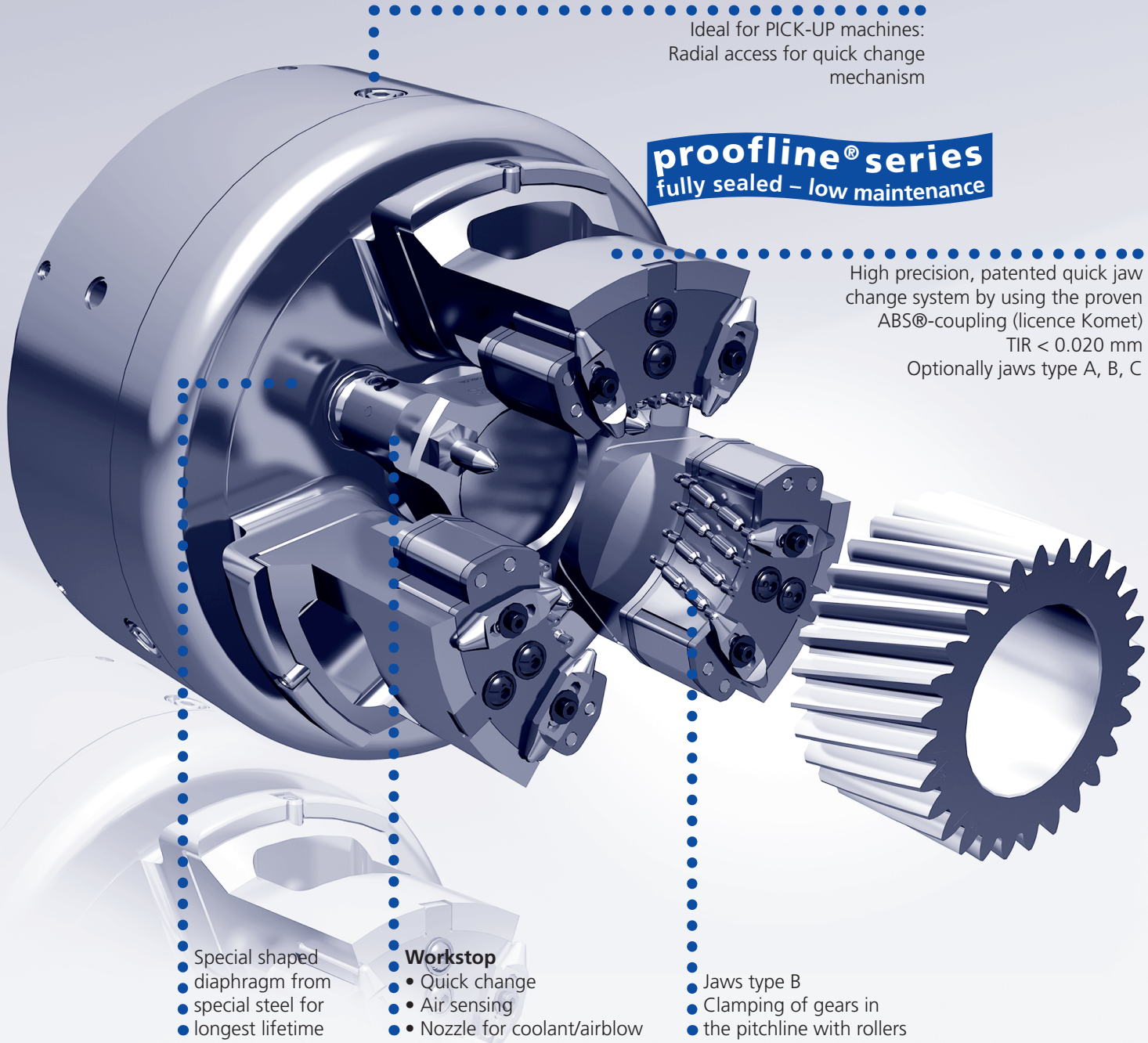

Main dimensions and technical data

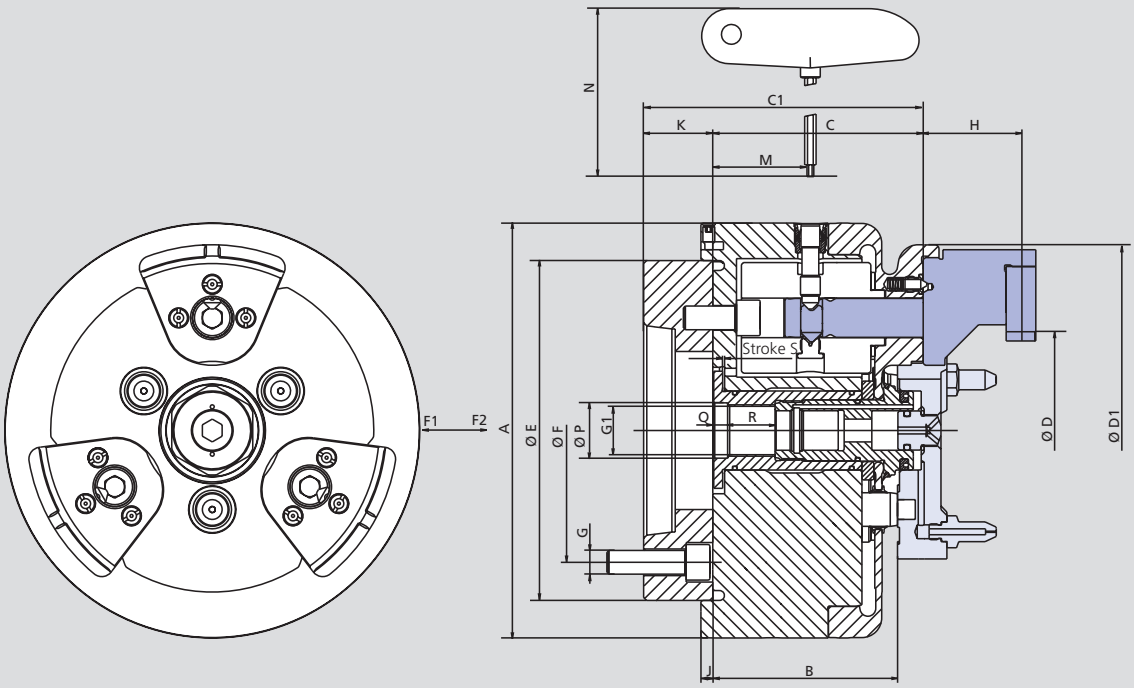

Subject to technical changes.
For more detailed information please ask our customer service.

SMW-AUTOBLOK Type			D-210		D-260		D-315
Mounting		Size	A5	A6	A6	A8	A8
	A	mm	210		260		315
	B	mm	93.5		108		111
	C	mm	106.5		120		125
	C_1	mm	146.5		156		173
Clamping range min./max.	D	mm	20-171		40-220		60-275
	D_1	mm	188		227		275
	E	mm	172		225		275
	F	mm	104.8	133.4	133.4	171.4	171.4
	G		M10	M12	M12	M16	M16
	G_1		M26 x 1.5		M26 x 1.5		M30 x 1.5
Jaw height	H	mm	52		62		64
	J	mm	6		6		6
	K	mm	40		48		48
	M	mm	49.4		53		57
	N	mm	185		185		185
	P H6	mm	28		28		32
	Q	mm	7		7		7
	R	mm	24		24		29.5
Piston stroke min./max.	S	mm	1.0		1.5		1.7
Jaw stroke at distance H			1.0		1.1		1.2
Draw pull min./max.*	F_1	kN	0-25		0-25		0-25
Draw push for chuck open	F_2	kN	30		30		30
Moment of inertia		$kg \cdot m^2$	0.16		0.45		0.75
Weight without top tooling		kg	30		44		60
Recommended actuating cylinders		Type	SIN-DFR		SIN-DFR		SIN-DFR

* Additional actuation force to the diaphragm spring clamping force applied by the clamping cylinder

Advice: The max. allowed speed for the application is permanently marked on the corresponding top jaws and must not be exceeded.

Advice: Please note, that it is important, that the cylinder force for pushing and pulling can be set to different values independently.

Important: Never rotate the chuck without inserted jaws, otherwise the centrifugal force compensation mechanism will get damaged.

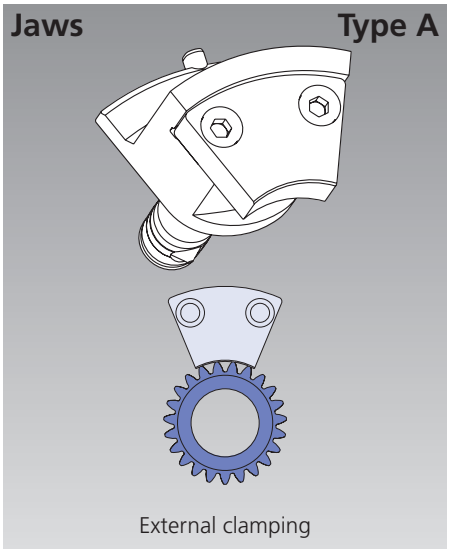

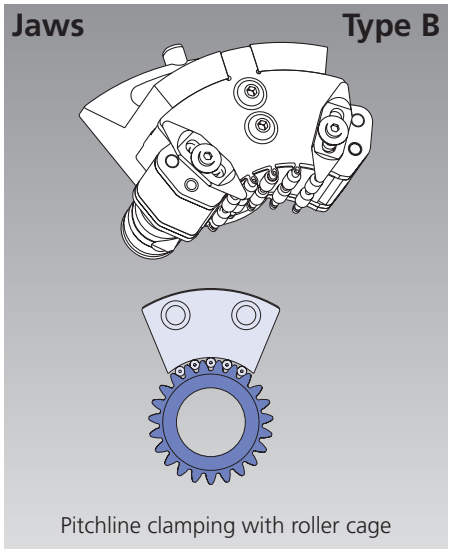

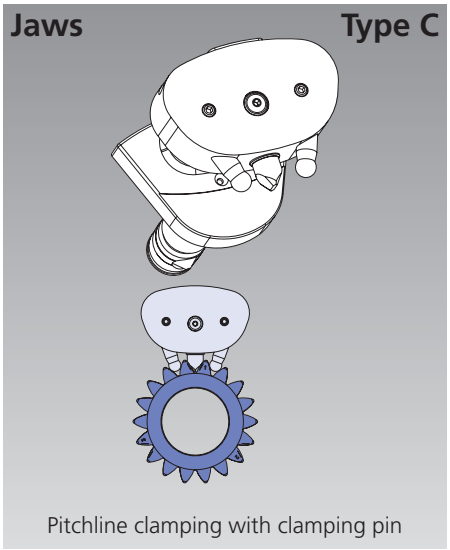

Actuating cylinder SIN-DFR for diaphragm chuck Type D

Technical features

- Special cylinder to actuate the diaphragm chuck
- Large/small piston area for opening/ clamping
- Rotary unions for 1 or 2 media
- Linear positioning system LPS to monitor the piston stroke

Standard equipment

- Cylinder with kit for LPS-XS installation without LPS-XS position sensor

LPS-XS see general catalog page 275

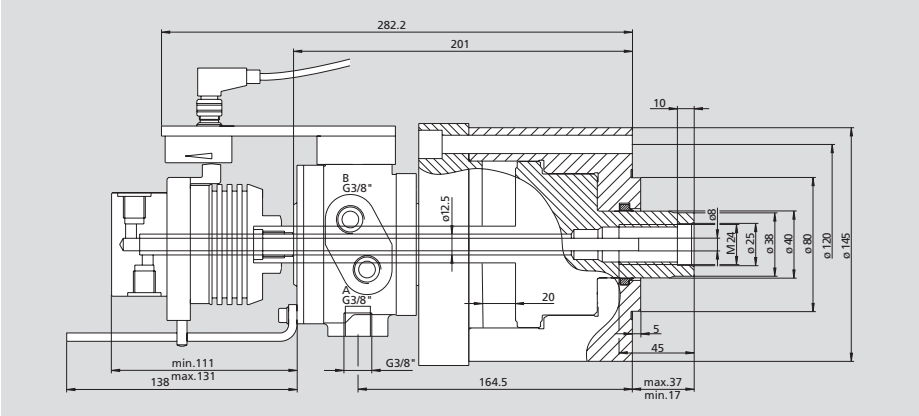

SIN-DFR-LPS-XS for rotary union 1 medium Id. No. 044860 (without rotary union*)
SIN-DFR-LPS-XS with rotary union 2 media Id. No. 044861 (rotary union 2 media included)

Piston surface A pull cm²	Piston surface B push cm²	Pressure A min/max bar	Pressure B min/max bar	Pull min./max. kN	Push min./max. (36 bar max.) kN	Speed max. r.p.m.	Leakage at 30 bar 50°C dm³/min	Weight cylinder kg	Moment of inertia kg·m²	Weight of rotary union 1 medium kg	Weight of rotary union 2 media kg
21	74	3-70	3-36	0.6/14	2.2-27	7000	1.5	9	0.016	0.4	1.5

* Please order separately!

Installation

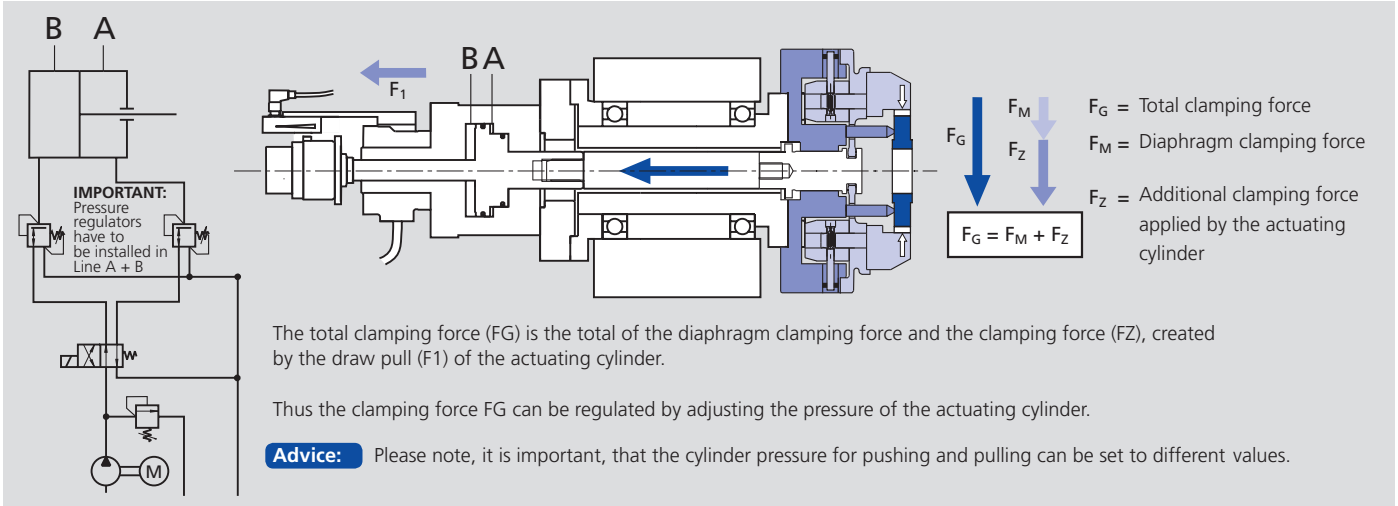

Clamping of easily deformed thin walled workpieces for hard turning or grinding

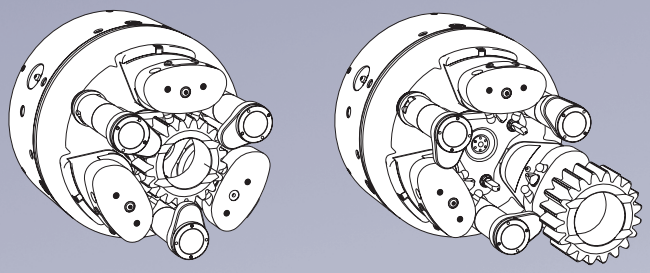

D-KOMBI®

Principle of D-KOMBI®

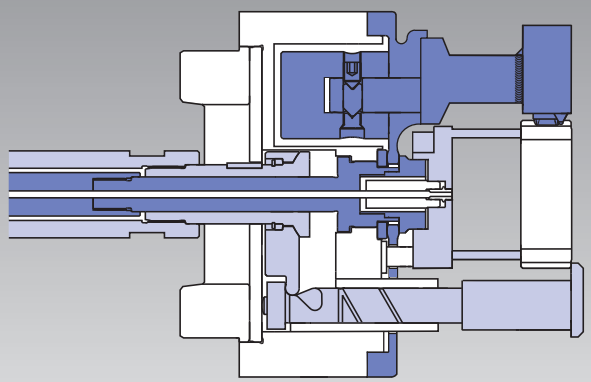

- Radial centering/clamping of the work piece with the diaphragm jaws, with quick jaw change system (same principle/characteristic as D-chuck page 214, however with additional face clamping)
- Axial clamping with swing clamps with axial compensation
- Actuation with double piston cylinder
  Separate actuation of the diaphragm jaws and the axial swing-clamps

Jaws are factory finished and match any chuck with no loss of concentricity

Never ever grind or bore jaws on the chuck!
TIR < 0.020 mm

1. Loading

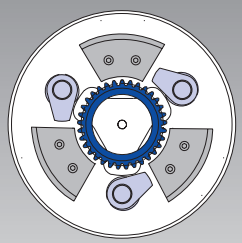

Centering jaws open.
Swing-clamps open/swivel outwards

2. Centering

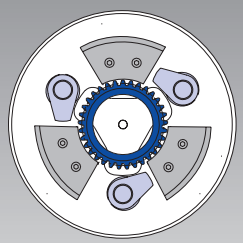

Centering jaws clamped

3. Clamping

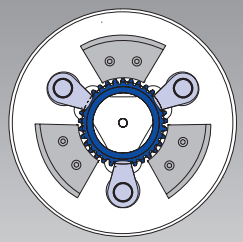

Swing-clamps swivel inward + clamp axially. Centering jaws open (if requested)

4. Machining

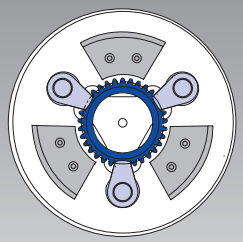

Centering jaws open or closed

Set-up time 5 minutes

for jaws, swing-clamps and workstop change
TIR < 0.020 mm without boring/grinding

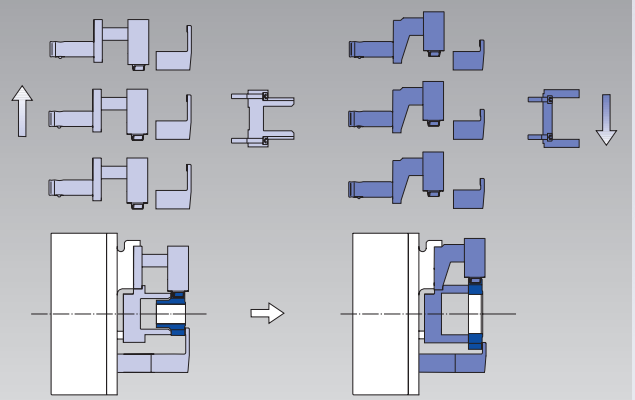

Ideal for pick up machines

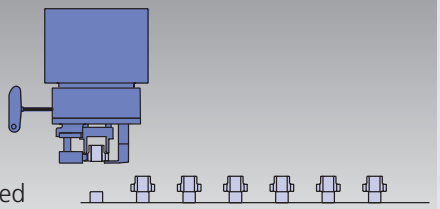

Easy to operate,
low maintenance,
chuck completely sealed

Radial clamping only is also possbile = function like D-chuck

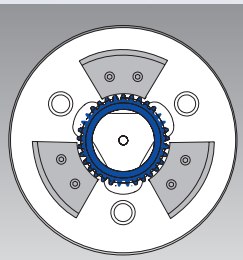

Swing clamps are not mounted

Clamping glossary

Radial clamping: Self-centering clamping of work pieces on the outside diameter. Depending on the necessary clamping force to drive the parts during machining thin walled components can be easily deformed.

Axial clamping: Clamping of work pieces on their face. This method is used for thin walled components. The radial deformation of the diameter to be machined can be eliminated. This is not self-centering clamping so that the work piece has to be positioned concentric.

Kombi clamping: Chucks with centering jaws for centering the workpiece with the diaphragm and axial clamping with swingclamps. After the work piece is clamped with a swing-clamp, the centering jaws can be opened (double piston cylinder necessary).
The **D-KOMBI** with quick jaw change ideally fulfills these requirements. The proven design of the **D-CHUCK** is maintained completely. Additionally an axial clamping drive is integrated.

If requested the **D-KOMBI** can also be used just for radial clamping. In this case no clamping fingers are mounted and the clamping force is regulated by adjusting the pressure on the clamping cylinder.

Double piston cylinder: These are cylinders with two independent pistons. Piston A drives the swing-clamps, piston B releases the diaphragm or regulates the clamping force of the diaphragm. Depending on the application, it may be necessary to have the pressure in the supply lines for piston surfaces A/B/C/D individually adjustable by individual pressure regulating valves. The SMW-AUTOBLOK double piston cylinder **ZHVD-DFR** is special designed for this application. Different rotating unions for 1 or 2 media (as an example air sensing and coolant) can be mounted to the standard cylinder.

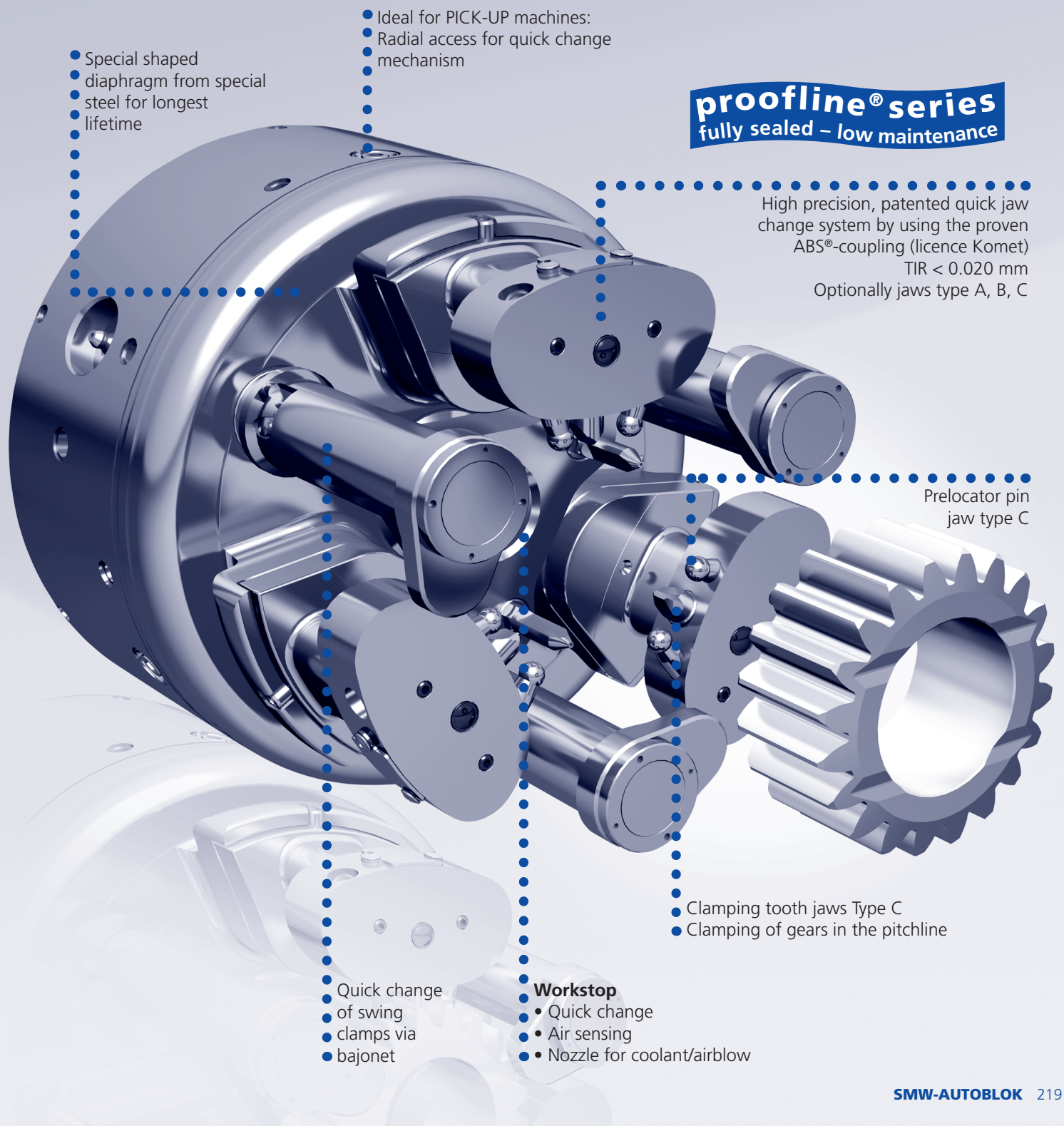

D-KOMBI®

Radial-axial clamping
QUICK JAW CHANGE SYSTEMS

Main dimensions and technical data

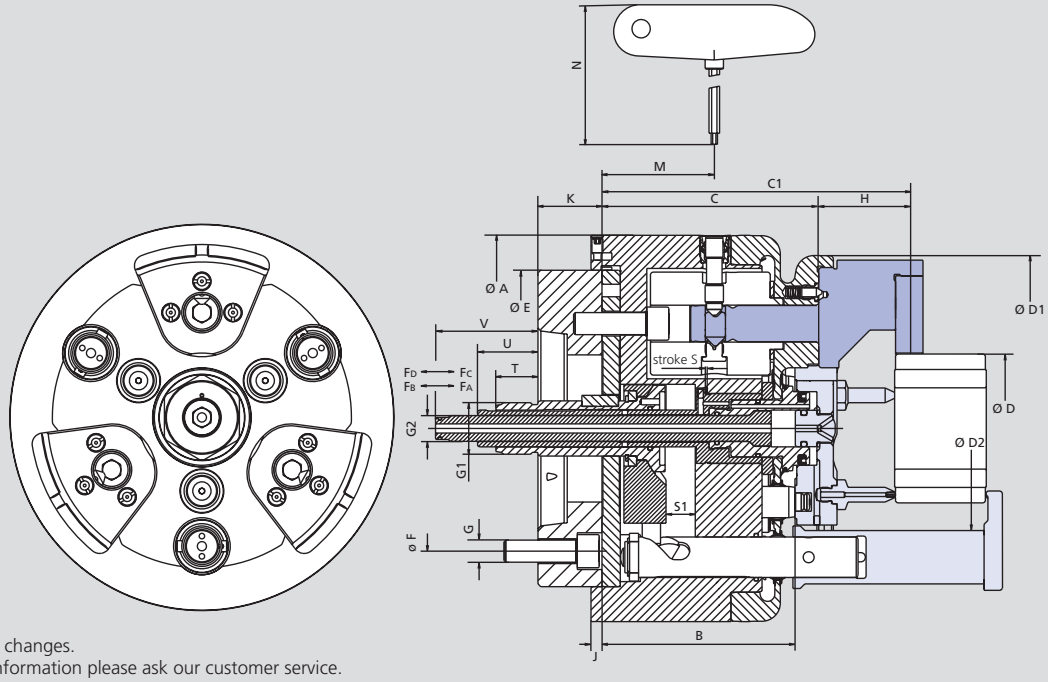

Subject to technical changes.
For more detailed information please ask our customer service.

SMW-AUTOBLOK Type			D-210 KOMBI		D-260 KOMBI		D-315 KOMBI	D-400 KOMBI	
Mounting		**Size**	**A5**	**A6**	**A6**	**A8**	**A8**	**A8**	**A11**
	A	mm	210		260		315	400	
	B	mm	105.5		111		116	123	
	C	mm	118.5		130		130	136	
	C1	mm	170.5		187		192	-	
Clamping range without fingers	**D**	mm	20-175		40-220		60-275	126-350	
	D1	mm	188		227		275	354	
Clamping range with fingers	**D2**	mm	111		153		203	268	
	E	mm	172		225		275	350	
	F	mm	104.8	133.4	133.4	171.4	171.4	171.4	235
	G		M10	M12	M12	M16	M16	M16	M20
	G1		M28 x 1.5		M28 x 1.5		M28 x 1.5	M28 x 1.5	
	G2		M14 x 1.0		M14 x 1.0		M14 x 1.0	M14 x 1.0	
Jaw height	**H**	mm	52		62		64	-	
	J	mm	6		6		6	6	
	K	mm	40		48		48	50	
	M	mm	61.4		61.9		61.9	66.5	
	N	mm	185		185		185	185	
Piston stroke	**S**	mm	1.0		1.5		1.5	1.5	
Axial stroke swing clamps	**S1**	mm	16		16		16	16	
	T	mm	18		10		10	8	
	U	mm	28		20		20	18	
	V	mm	51		43		43	41	
Jaw stroke at distance H		mm	1.0		1.1		1.2	0.87	
Draw pull min./max.*	**FD**	kN	0-25		0-25		0-25	0-25	
Draw push for chuck open	**FC**	kN	20		20		20	20	
Draw pull swing clamps max.	**FB**	kN	6		9		9	18	
Draw push swing clamps open	**FA**	kN	2		2		2	2	
Moment of inertia		kg·m²	0.16		0.45		0.75	2.26	
Weight without top tooling		kg	30		44		60	109	
Recommended actuating cylinder		**Type**	**ZHVD-DFR**		**ZHVD-DFR**		**ZHVD-DFR**	**ZHVD-DFR**	

* Additional draw pull to the diaphragme force actuated by the actuating cylinder

Advice: The max. allowed speed for the application is permanently marked on the corresponding top jaws and must not be exceeded.

Important: Never rotate the chuck without inserted jaws, otherwise the centrifugal force compensation mechanism will get damaged.

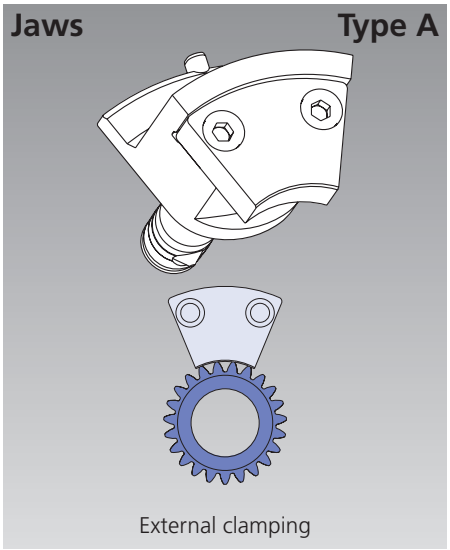

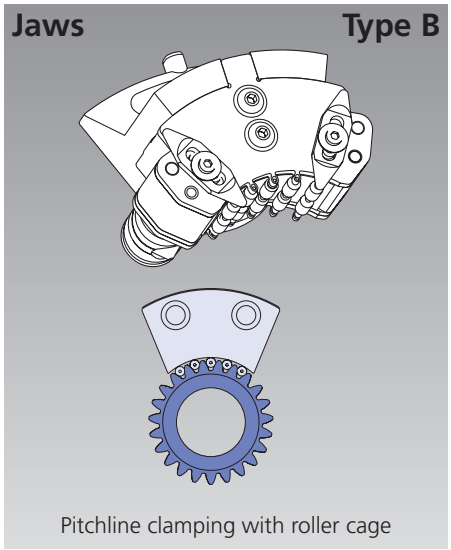

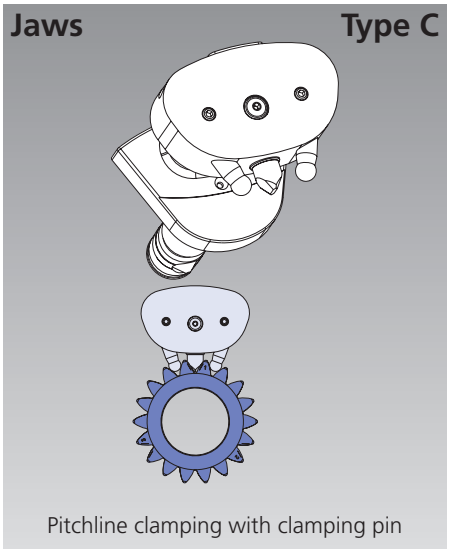

Actuating cylinder ZHVD-DFR for D-KOMBI®

Technical features

- Special double piston cylinder to actuate D-KOMBI
- 2 independent pistons for diaphragm jaws and axial swing clamp drive
- Rotating unions for 1 or 2 media
- 2 Linear Position Systems LPS for monitoring of the piston strokes

Standard equipment

- Cylinder with kit for LPS, without LPS position sensor

LPS see total catalog page 275

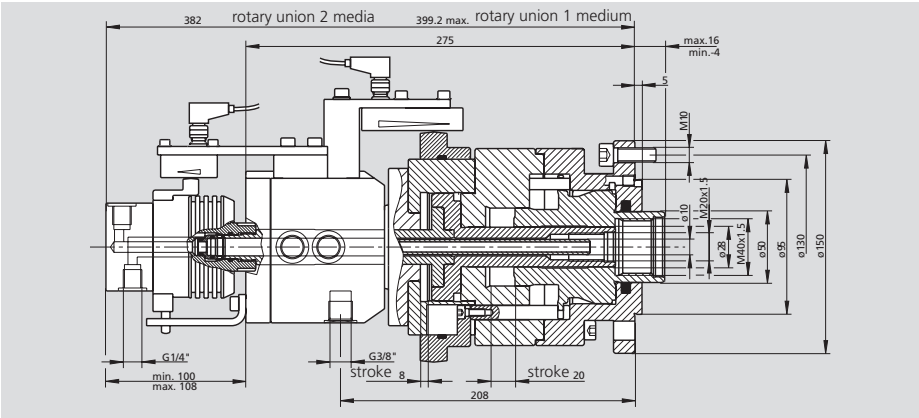

ZHVD-DFR for rotary union 1 medium Id. No. 044865 (without rotary union)*
ZHVD-DFR with rotary union 2 media Id. No. 044866 (rotary union 2 media included)

Piston surface Axial finger (K1) A push cm²	B pull cm²	Diaphragm (K2) C push cm²	D pull cm²	Pressure min./max. bar	Speed max. min⁻¹	Leakage at 30 bar 50°C dm³/min	Weight cylinder kg	Moment of inertia kg·m²	Weight of rotary union 1 medium kg	Weight of rotary union 2 media kg
17.6	30.6	40.6	39.2	3-60	4000	3.0	25	0.065	0.4	1.5

* To be ordered seperately!

Installation

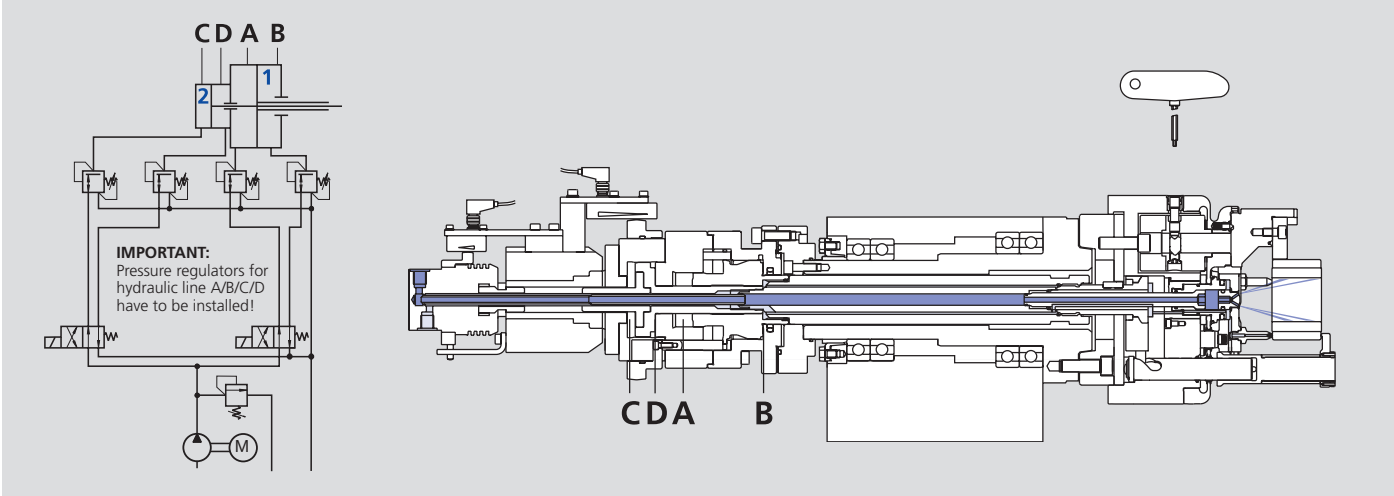

D-PLUS

Diaphragm chuck
QUICK JAW CHANGE SYSTEMS

Open center diaphragm chuck

Main dimensions and technical data

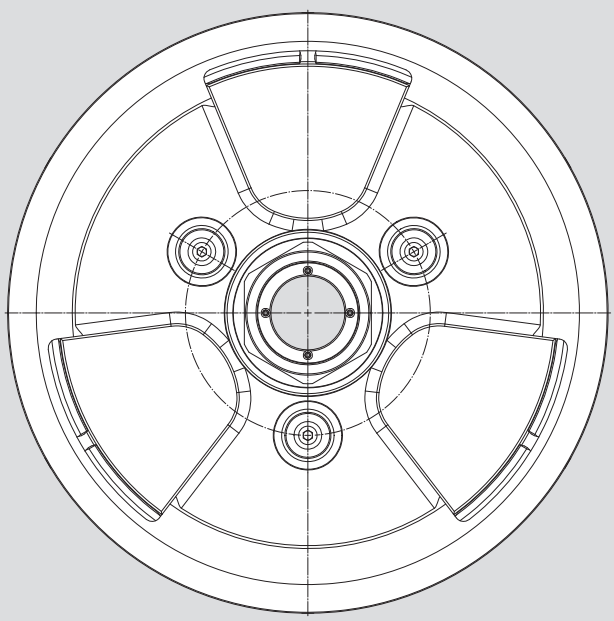

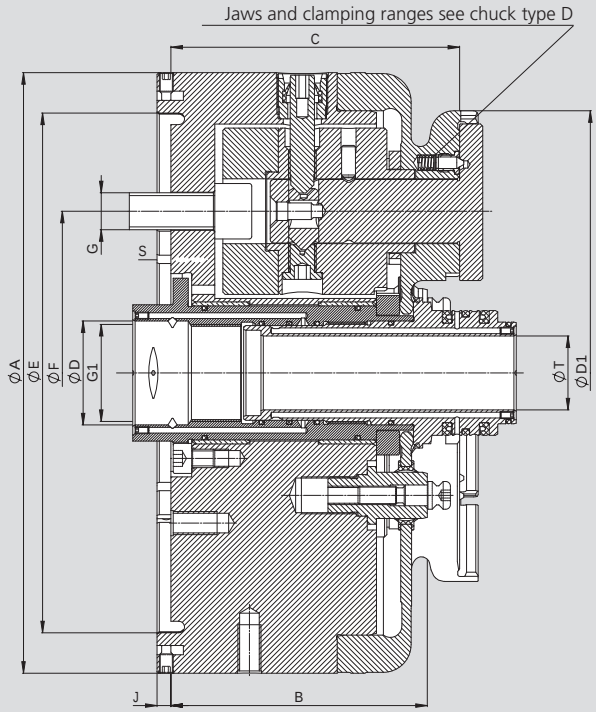

Subject to technical changes.
For more detailed information please ask our customer service.

SMW-AUTOBLOK Type			D-PLUS-260	D-PLUS-315
Mounting		**Size**	**225**	**275**
	A	mm	260	315
	B	mm	111	111
	C	mm	125	125
	D1	mm	227	275
	E	mm	225	275
	F	mm	140	171.4
	G		M16	M16
	G1		M42x1.5	M60x1.5
	J	mm	6	6
	P H6	mm	45	63
Piston stroke	**S**	mm	1.5	1.5
Through hole	**T**	mm	32	50
Draw pull min./max.*	**F1**	kN	0-25	0-30
Draw push for chuck open	**F2**	kN	25	30
Moment of inertia		kg·m²	0.45	0.75
Weight without top tooling		kg	44	65
Recommended actuating cylinders		**Type**	**SIN-DFR**	**SIN-DFR**

* Additional actuation force to the diaphragm spring clamping force applied by the clamping cylinder.

Advice: The max. allowed speed for the application is permanently marked on the corresponding top jaws and must not be exceeded.

Advice: Please note, that it is important, that the cylinder force for pushing and pulling can be set to different values independently!

Important: Never rotate the chuck without inserted jaws, otherwise the centrifugal force compensation mechanism will get damaged.

- Radial O.D. or pitch line clamping
- With central bore
- Centrifugal force compensation

D-PLUS

Diaphragm chuck
QUICK JAW CHANGE SYSTEMS

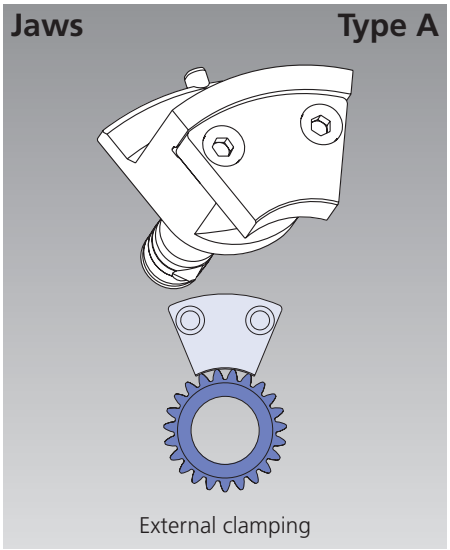

External clamping

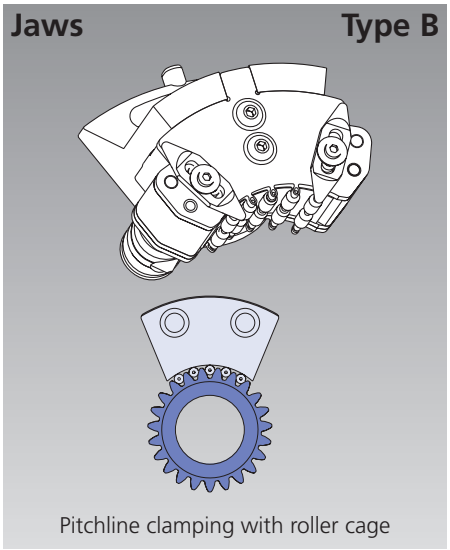

Pitchline clamping with roller cage

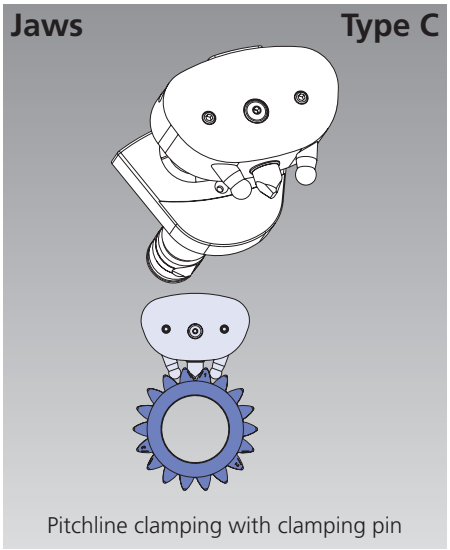

Pitchline clamping with clamping pin

Actuating cylinder SIN-DFR for diaphragm chuck Type D-PLUS

Technical features

- Special cylinder to actuate the diaphragm chuck
- Large/small piston area for opening/ clamping
- Rotary unions for 1 or 2 media
- Linear positioning system LPS to monitor the piston stroke

Standard equipment

- Cylinder with kit for LPS-XS installation without LPS-XS position sensor

LPS-XS see total catalog page 275

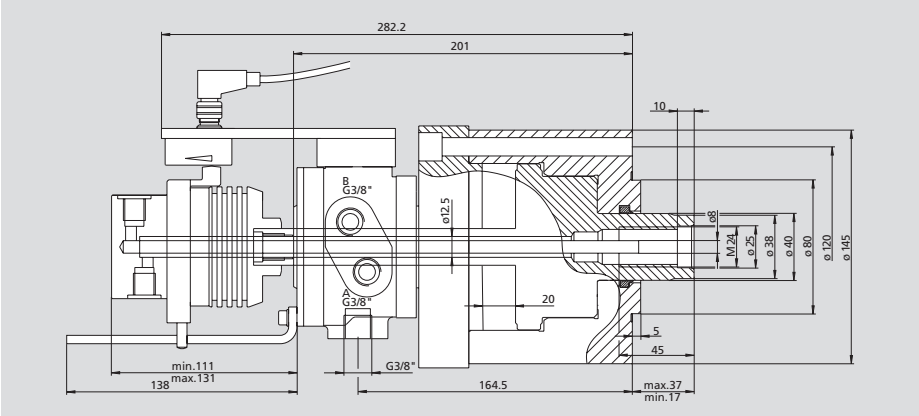

SIN-DFR-LPS-XS for rotary union 1 medium Id. No. 044860 (without rotary union*)
SIN-DFR-LPS-XS with rotary union 2 media Id. No. 044861 (rotary union 2 media included)

Piston surface A pull cm²	Piston surface B push cm²	Pressure A min/max bar	Pressure B min/max bar	pull min./max. kN	push min./max. (36 bar max.) kN	Speed max. r.p.m.	Leakage at 30 bar 50°C dm³/min	Weight cylinder kg	Moment of inertia kg·m²	Weight of rotary union 1 medium kg	Weight of rotary union 2 media kg
21	74	3-70	3-36	0.6/14	2.2-27	7000	1.5	9	0.016	0.4	1.5

* To be ordered seperately!

Example of application

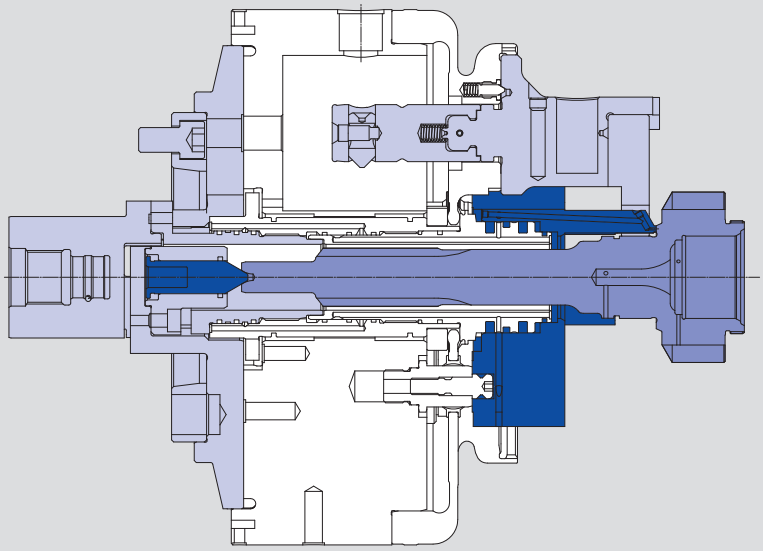

D-VARIO

Diaphragm chuck
FLEXIBLE MODULAR SYSTEM

Main dimensions and technical data

Application/customer benefits

- Flexible solution for grinding with quick adjustment for short set up times

Technical features

- Adjustable, modular jaw system for clamping different work pieces with the same jaws
- Key Lock System for quick positioning of the pitch of different work pieces
- Micrometer fine adjustment of the center line
- For small, medium and large batch sizes
- Workstop with medium feed for air sensing and integrated coolant nozzles optional
- Jaws for O.D. clamping (Type A) optional
- D-Vario Configurator: free application to configurate your set up (www.smw-autoblok.de/qr/vario)

Standard equipment

Diaphragm chuck D-Vario (with mounting bolts)

Optional accessories in the modular system:

Pitch line clamping

- 6 different jaw sets for different outside diameters
- Key Lock System for different pitches of gears (see figure A, B and C)
- Clamping pins for different modules (Dia. of ball Ø 3,0 mm to 6,0 mm)
- Locators

O.D. clamping (Type A)

- 4 different jaw blanks for different outside diameters
- Factory finished jaws
- Locators

D-VARIO Configurator Software:

- Safe and quick configuration of all set-ups for different gears
- Web-APP: from anywhere with any device feasible (internet access needed)
- Data export possible

With this free of charge D-Vario configurator a complete top jaw and the corresponding locator with the locator pins can be configured for your gears.

The export function allows you to safe your results on your PC.

Start Web-App: **www.smw-autoblok.de/qr/dvario**

A: Number of teeth is divisible by 3

Example of application:
gear with number of teeth [z] = 30

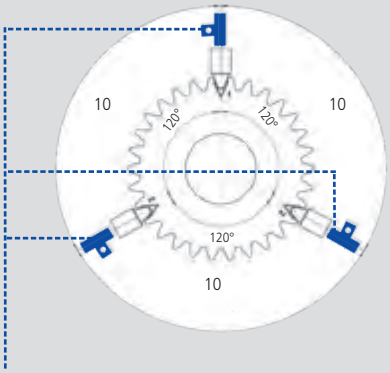

▶ Specification of Key Lock System:
3x Key straight

B: Number of teeth is not divisible by 3

Example of application:
gear with number of teeth [z] = 31

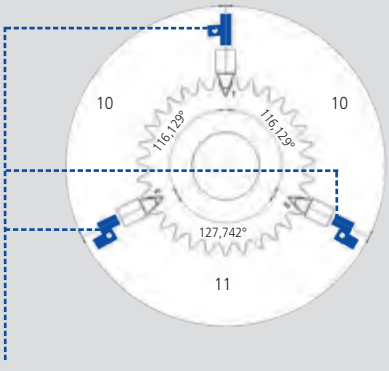

▶ Specification of Key Lock System:
1x Key straight,
2x Key for number of teeth 31

C: Number of teeth is not divisible by 3

Example of application:
gear with number of teeth [z] = 32

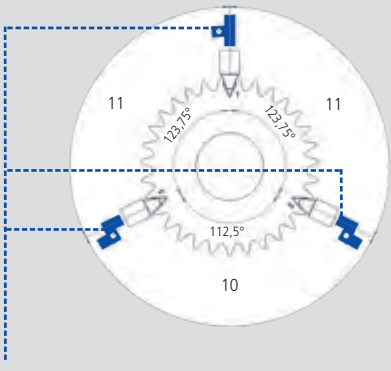

▶ Specification of Key Lock System:
1x Key straight,
2x Key for number of teeth 32

D-VARIO

Main dimensions and technical data

Diaphragm chuck
FLEXIBLE MODULAR SYSTEM

Top jaws and locator base are optional.

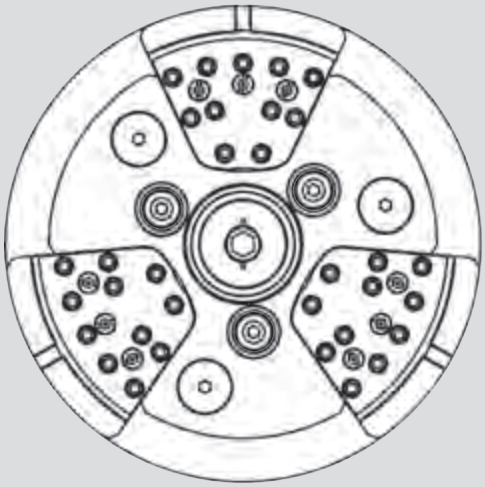

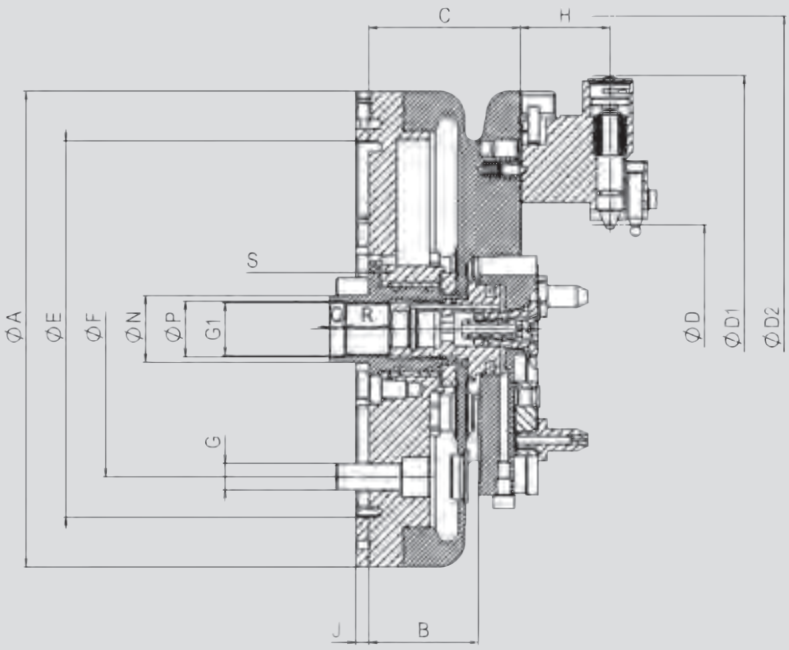

Subject to technical changes.
For more detailed information please ask our customer service.

SMW-AUTOBLOK Type			D-VARIO 215
Mounting			**Z170**
Id. No.			069100
	A	mm	215
Locating Face for Locator	**B**	mm	49.5
	C	mm	68.5
Clamping range min./max.	**D**	mm	24 - 144
Swing min.	**D1**	mm	215
Swing max.	**D2**	mm	264
	E	mm	170
	F	mm	133.4
	G		M12
	G1		M24x1.5
Jaw height	**H**	mm	40.5
	J	mm	6
	P H8	mm	25
	Q	mm	7
	R	mm	20
Piston stroke	**S**	mm	1.0
Jaw stroke at distance H		mm	0.95
Draw pull min./max.*		kN	0-15
Draw push for chuck open		kN	15
Moment of inertia		kg·m²	0.082
Weight without top tooling		kg	12.2
Recommended actuating cylinders		**Type**	**SIN-DFR**

* Additional draw pull to the diaphragme force actuated by the actuating cylinder

Advice: Please note: It is important, that the cylinder force for pushing and pulling can be set to different values independently.

Configuration of the set up for pitch line clamping within only 5 steps:

I

First you have to choose your matching top jaw (size 1 - 6) for the outside diameter [da] of the gear to be machined. Each size of top jaw can cover 20 mm outside diameter using two different types of clamping pins (Type A and B).
One set of top jaw consists of 3 pieces including 1 straight Key Lock insert.

II

The determination of the spherical clamping pins is made according to the ball dimension of the gear.
There are 2 types of clamping pins:
Type A for the first 10 mm of the clamping range of the top jaws.
Type B for the second 10 mm of the clamping range of the top jaws.

III

Optionally prelocator pins are available.
Prelocator pins are used at automatic loading.
The determination is made according to the clamping pins used.

IV

One set of Key Lock insert consists of 2 keys. Gears, which number of teeth that is divisible by 3 can be machined with 3 of the same type Key Lock insert (straight).
For all gears, which number of teeth is not divisible by 3, there are different key insert sets available according to the number of teeth. The Key Lock inserts are the same for all 6 sizes of top jaws.

V

The following types of locator bases are available:
Type A: without air sensing / without nozzle for coolant
Type B: without air sensing/with nozzle for coolant
Type C: with air sensing / with nozzle for coolant
The height of the locator posts is depending on the gear.

Overview of the clamping kit:

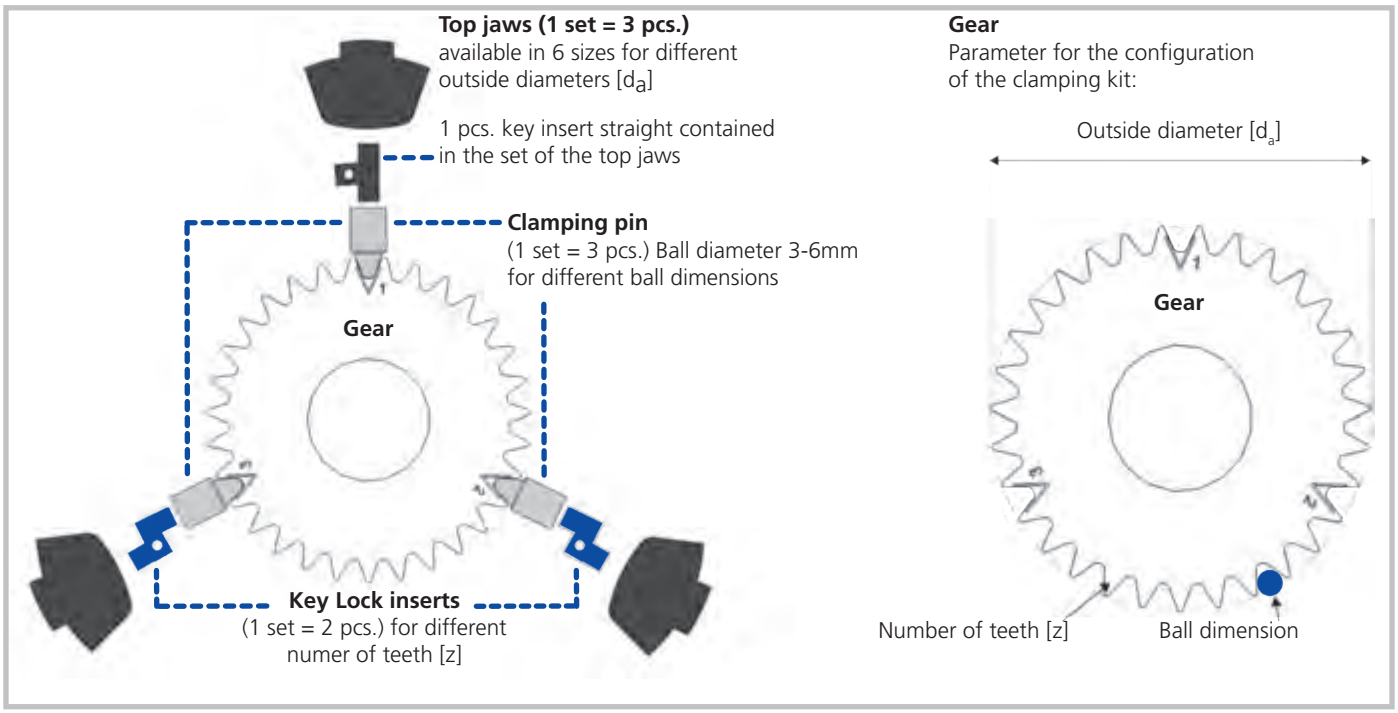

D-Vario Configurator
free application to configurate your set up
www.smw-autoblok.de

I. Determination of the top jaws

Top Jaws		Size	1	2	3	4	5	6
Outside diameter of gear	d_a	mm	**24-44**	**44-64**	**64-84**	**84-104**	**104-124**	**124-144**
Number of teeth	z	number	16-37	14-44	13-86	13-86	13-86	13-86
Inside clearance diameter of jaws		mm	48	68	88	108	128	148
Swing diameter		mm	164	184	204	224	244	264
Weight / set		kg	2.9	3.0	3.0	3.1	3.1	3.1
Order number / set of 3 pieces		Id. No.	**630741**	**630742**	**630743**	**630744**	**630745**	**630746**

Clamping pin Type		A	B	A	B	A	B	A	B	A	B	A	B
Clamping range	mm	24-34	34-44	44-54	54-64	64-74	74-84	84-94	94-104	104-114	114-124	124-134	134-144

II. / III. Determination of the clamping pins (and optional prelocator pins)

Clamping pin type	Set	Type A	Available prelocator pins	Type B	Available prelocator pins
Ball diameter Ø 3,0	Id. No.	**630851B**	339835	**630844B**	339843
Ball diameter Ø 3,5	Id. No.	**630852B**	339836	**630845B**	339844
Ball diameter Ø 4,0	Id. No.	**630853B**	339837	**630846B**	339845
Ball diameter Ø 4,5	Id. No.	**630854B**	339838	**630847B**	339846
Ball diameter Ø 5,0	Id. No.	**630855B**	339839	**630848B**	339847
Ball diameter Ø 5,5	Id. No.	**630856B**	339840	**630849B**	339848
Ball diameter Ø 6,0	Id. No.	**630857B**	339841	**630850B**	339849

Clamping pins

Clamping pin type A

Ball diameter
Ø 3; 3,5; 4; 4,5; 5; 5,5; 6

Top jaw 1	**Ø 24-34 mm**
Top jaw 2	**Ø 44-54 mm**
Top jaw 3	**Ø 64-74 mm**
Top jaw 4	**Ø 84-94 mm**
Top jaw 5	**Ø 104-114 mm**
Top jaw 6	**Ø 124-134 mm**

Clamping pin type B

Ball diameter
Ø 3; 3,5; 4; 4,5; 5; 5,5; 6

Top jaw 1	**Ø 34-44 mm**
Top jaw 2	**Ø 54-64 mm**
Top jaw 3	**Ø 74-84 mm**
Top jaw 4	**Ø 94-104 mm**
Top jaw 5	**Ø 114-124 mm**
Top jaw 6	**Ø 134-144 mm**

▶ **Clamping pin type A**
For the first 10 mm of the clamping range of the top jaws.

▶ **Clamping pin type B**
For the second 10 mm of the clamping range of the top jaws.

▶ **Compatibility**
All types and sizes of clamping pins are compatible to all top jaws.

IV. Key Lock inserts for different number of teeth of gears

Id. No. Key Lock insert for gears which number of teeth is not divisible by 3 (1 set = 2 pcs.)									
z = 10	**z = 11**	**z = 13**	**z = 14**	**z = 16**	**z = 17**	**z = 19**	**z = 20**	**z = 22**	**z = 23**
339911	339912	339913	339914	339915	339916	339917	339918	339919	339920
z = 25	**z = 26**	**z = 28**	**z = 29**	**z = 31**	**z = 32**	**z = 34**	**z = 35**	**z = 37**	**z = 38**
339921	339922	339923	339924	338725	339925	339926	339927	339928	339929
z = 40	**z = 41**	**z = 43**	**z = 44**	**z = 46**	**z = 47**	**z = 49**	**z = 50**	**z = 52**	**z = 53**
339930	339931	339932	339933	339934	339935	339936	339937	339938	339939
z = 55	**z = 56**	**z = 58**	**z = 59**	**z = 61**	**z = 62**	**z = 64**	**z = 65**	**z = 67**	**z = 68**
339940	339941	339942	339943	339944	339945	339946	339947	339948	339949
z = 70	**z = 71**	**z = 73**	**z = 74**	**z = 76**	**z = 77**	**z = 79**	**z = 80**	**z = 82**	**z = 83**
339950	339951	339952	339953	339954	339955	339956	339957	339958	339959
z = 85	**z = 86**								
339960	339961								

Id. No. Key Lock insert for gears which number of teeth is divisible by 3 (1 set = 2 pcs.)									
straight									
338724									

Order Example:

Gear with number of teeth 32 ► not divisible by 3 ► Id. No. 339925 (1 set = 2 pcs.)

Gear with number of teeth 33 ► divisible by 3 ► Id. No. 338724 (1 set = 2 pcs.)

1 straight Key Look that comes with the chuck always remains in use.

Key Lock insert (1 set = 2 pcs.)

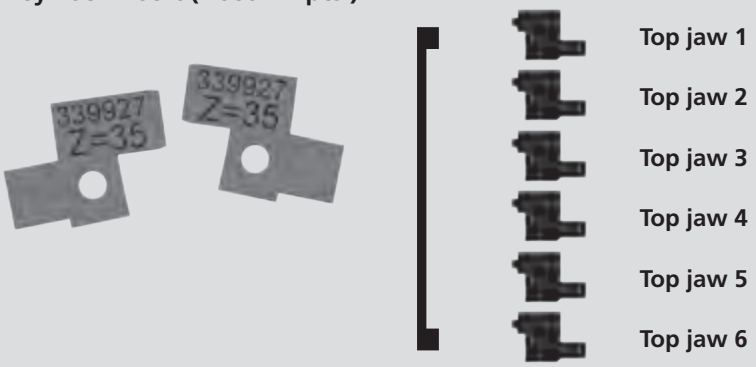

► **Compatibility**
All Key Lock inserts are compatible to all top jaws.

V. Locator base

Locator base

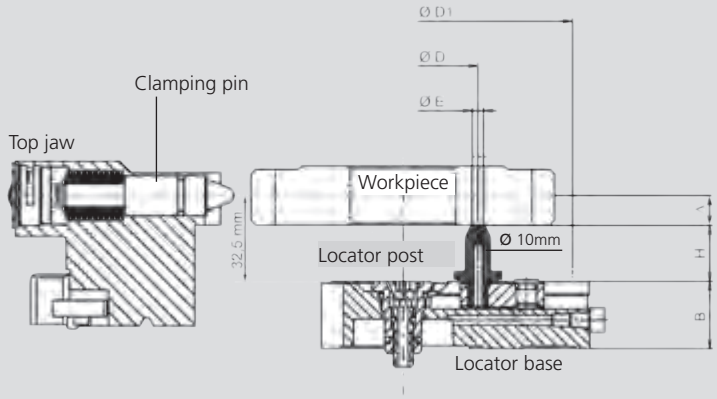

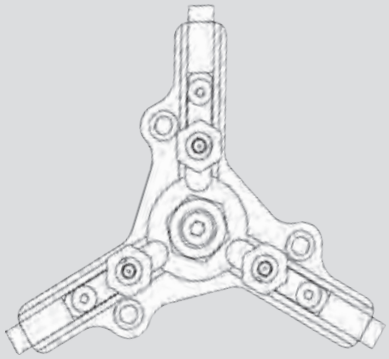

Determination of height of locator posts:
Δ = Distance between clamping position and locating face
Height of locator posts [H] = 32,5 mm - Δ

Clamping position = 1/2 serration length / at longer serrations it is the requested clamping position.
In case the lowest face is not the locating face, please ask our customer service.

Locator base			Type A	Type B	Type C
Medium feed for air sensing			-	-	X
Noozle for coolant			-	X	X
Locating diameter min.	**D**	min.	22	47	47
Locating diameter max.	**D1**	max.	136	136	136
Width	**B**	mm	27	27	27
Order Number		Id. No.	339860	339859	339858

Locator posts with contact face diameter [E] = Ø 2.5 mm	
Height [H] = 12.5 mm	339861
Height [H] = 15.0 mm	339862
Height [H] = 17.5 mm	339863
Height [H] = 20.0 mm	339864
Height [H] = 22.5 mm	339865
Height [H] = 25.0 mm	339866
Height [H] = 27.5 mm	339867
Height [H] = 30.0 mm	339868
Height [H] = 32.5 mm	339869
Height [H] = 35.0 mm	339870
Height [H] = 37.5 mm	339871
Height [H] = 40.0 mm	339872
Height [H] = 42.5 mm	339873
Height [H] = 45.0 mm	339874
Height [H] = 47.5 mm	339875
Height [H] = 50.0 mm	339876

I.D. Number is for one set (=3 pieces)

Locator posts with contact face diameter [E] = Ø 4.5 mm	
Height [H] = 12.5 mm	339877
Height [H] = 15.0 mm	339878
Height [H] = 17.5 mm	339879
Height [H] = 20.0 mm	339880
Height [H] = 22.5 mm	339881
Height [H] = 25.0 mm	339882
Height [H] = 27.5 mm	339883
Height [H] = 30.0 mm	339884
Height [H] = 32.5 mm	339885
Height [H] = 35.0 mm	339886
Height [H] = 37.5 mm	339887
Height [H] = 40.0 mm	339888
Height [H] = 42.5 mm	339889
Height [H] = 45.0 mm	339890
Height [H] = 47.5 mm	339891
Height [H] = 50.0 mm	339892

I.D. Number is for one set (=3 pieces)

D-VARIO

Diaphragm chuck
FLEXIBLE MODULAR SYSTEM

■ Jaws type A for O.D. clamping

Jaws type A

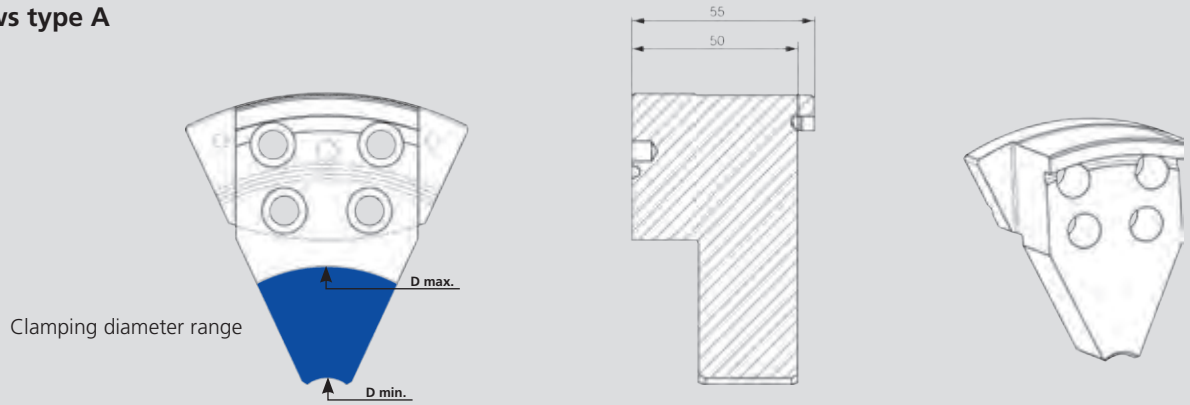

Jaws type A		1	2	3	4	5	6
Clamping Range Ø D min. - D max.	mm	20-40	40-60	60-80	80-100	100-120	120-140
Weight / set	kg	1.1	1.1	1.0	1.0	1.0	0.8
Blank jaws (set of 3 pcs.)	Id. No.	631484		631485		631486	631487
Jaws factory finished* (set of 3 pcs.)	Id. No.	631488	631489	631490	631491	631492	631493

* Jaws are factory finished according to the specified clamping diameter.
Note: The clamping diameter must be specified in case of order.

Device

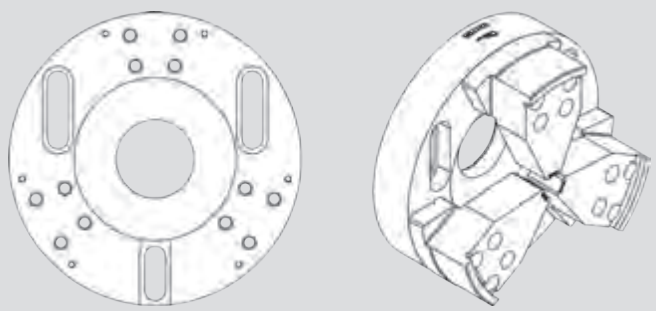

Grinding rings (1 Set = 2 pcs.)

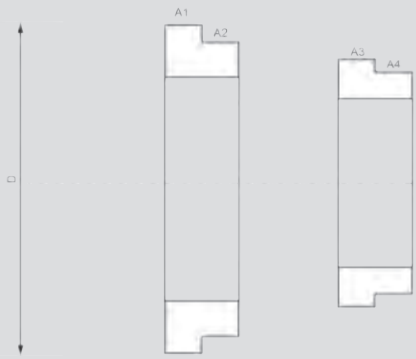

Device for machining of the blank jaws type A	
Jaws type A sizes 1 - 6	631296

The device is needed to pre-machine the blank jaws type A.
Then, the jaws must be finish ground to the clamping diameter on the D-Vario chuck. For this operation, the jaws have to be clamped with the grinding rings.

Recommended grinding rings (1 Set = 2 pcs.)	
Jaws type A sizes 1 - 6	631309

Grinding data:

1. Grinding	A1	D = 177.0 mm	residual jaw stroke 0.25 mm
2. Grinding	A2	D = 176.9 mm	residual jaw stroke 0.20 mm
3. Grinding	A3	D = 176.8 mm	residual jaw stroke 0.15 mm
4. Grinding	A4	D = 176.7 mm	residual jaw stroke 0.10 mm

The clamping diameter A1 is used for the first finish grinding process. The smaller clamping diameter of the grinding rings (A2-A4) are used to regrind worn or damaged existing jaws.

Rotary union for 2 media

RU-2-20

■ For double piston cylinder ZHVD-DFR for D-chucks

Application/customer benefits

- Rotary union for media supply for rotating cylinders
- Universal for air + oil/air + coolant
- Can also rotate dry (without medium applied)

Technical features

- Rotary union for 2 media
- Port A for air, oil and coolant
- Port B for air

Note: The medium must be free of contamination
Filter 25 µm requested

Standard equipment

RU-2-20
Anti rotation pinblok
Adapter for tube Ø 12 mm (ID = 10 mm) Id. No. 044154

Option

Adapter for tube Ø 10 mm (ID = 8 mm) Id. No. 044149
Adapter for tube Ø 8 mm (ID = 6 mm) Id. No. 044155

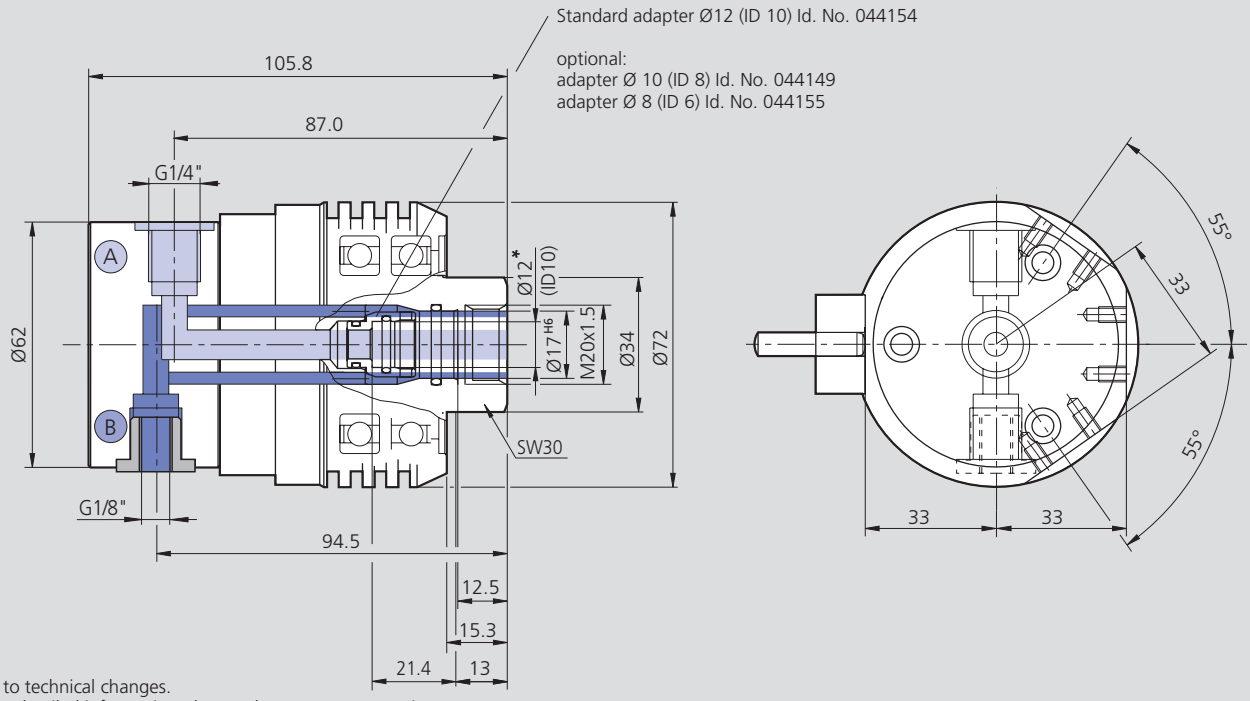

Subject to technical changes.
For more detailed information please ask our customer service.

Technical data

SMW-AUTOBLOK Type	Id. No.	max. speed	max. pressure port A media: air, oil, coolant		max. pressure port B media: air only		Weight	Filter requested
		r.p.m.	bar	psi	bar	psi	kg	µm
RU-2-20	044972	4000	40	580	10	145	0.94	25

Collet chucks ■ Bar pulling chucks

Page 234

KSZ-MB

Collet chuck

- For bar machining
- Push actuation

Page 238

KSZ-DZN

Draw collet chuck

KSZ-AZN

Draw collet chuck with workstop

- For bar machining
- Draw actuation
- KSZ-DZN: for bars
- KSZ-AZN: for bar or shaft machining with removable workstop

Page 241

KSZ-NZN

Collet chuck for neutral axial positioning

- For bar or shaft machining
- To push actuation
- Neutral axial position of the workpiece during clamping
- Removable workstop

Page 244

KSZ-AZL

Draw collet chuck including preparation for air sensing

- For bar or shaft machining
- Draw actuation
- With built-in air sensing
- Removable workstop

Page 246

GF 80

INCH SERRATION
Bar pulling chuck

Spring operated bar pulling chuck

- Spring actuation
- For stationary outside clamping

6

KSZ-MB

Collet chuck

Collet chuck for bar machining

- Bar Ø 3 - 80
- Collets DIN 6343

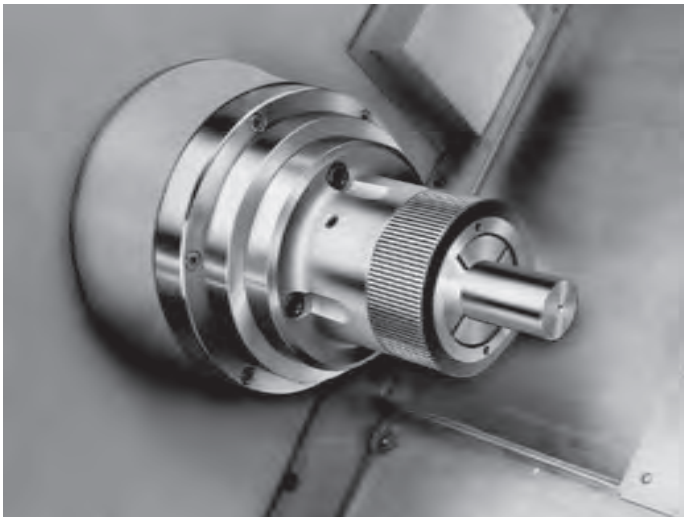

Application/customer benefits

- Efficient machining of bar material on automatic bar machines with bar feed.
- Less deformation of thin-walled components during clamping.
- Quick set-up by means of bayonet locking cap.
- For highest speeds.
- Clamping/unclamping of chuck during spindle rotation is possible.

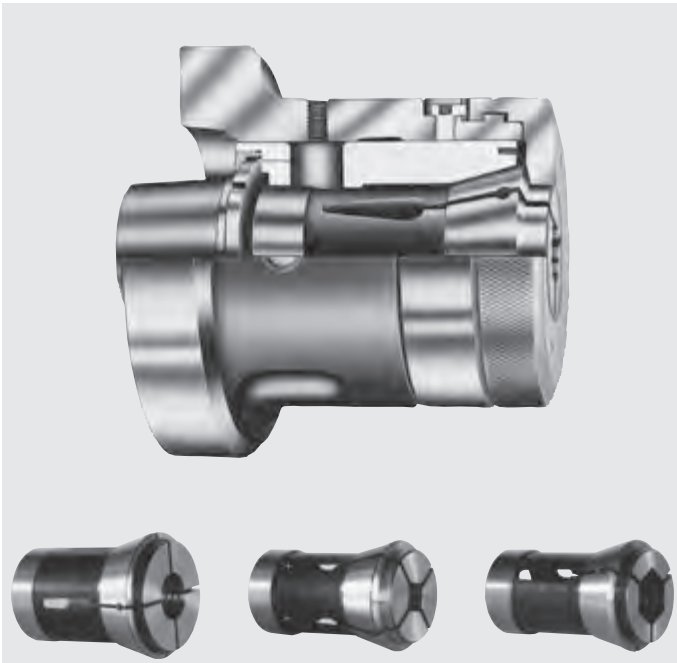

Profitability

- Quick and simple installation to all lathes. (alternating with 3-jaw chucks)
- Round, square and hexagonal material can be clamped, by simply changing the collet.
- Cost effective by using standard collets DIN 6343 as well as standard Rubberflex and Multirange collets.
- Collets for highest concentricity for special profiles, vulcanized, coated or ground to size are available on request.

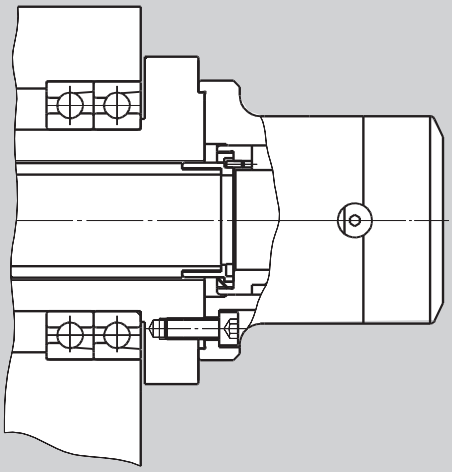

- Case hardened and ground chuck parts ensure long service life.
- Finish-machining of all parts in one set-up guarantees perfect concentricity.
- Direct mounting to the machine spindle ensures high concentricity.
- High operating reliability due to a minimum of parts.
- High axial positioning accuracy of the components by means of push type collet system.

KSZ-MB

Main dimensions and technical data

Collet chuck

Attention: Chuck position „open" (left end position) is with end stop in actuating cylinder.
Do not actuate chuck without cap nut mounted!
Remove pin dia. 3 for rotating ring nut for direct connection in thread dimension T.

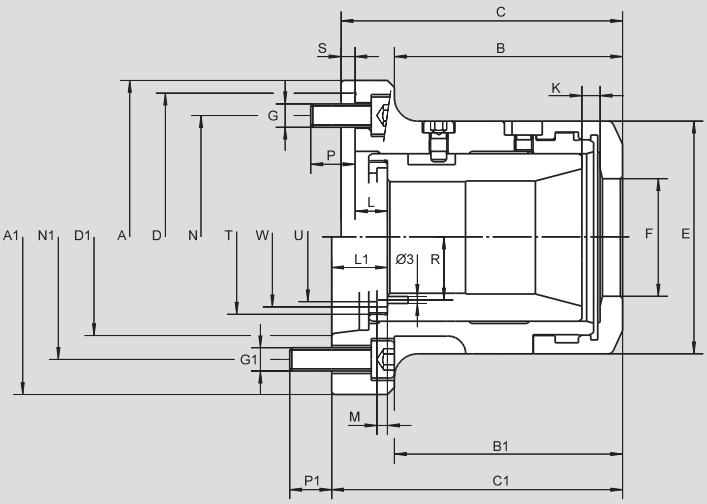

Subject to technical changes.
For more detailed information please ask our customer service.

SMW-AUTOBLOK Type		KSZ-MB 40			KSZ-MB 60				KSZ-MB 80
Mounting		**Z140**	**A5**	**A6**	**Z170**	**Z220**	**A6**	**A8**	**Z220/A8**
Id. No.		088174	088180	088179	088175	088176	088178	088177	091209
	A h6	148	-	-	185	235	-	-	-
	A1 h6	-	135	170	-	-	170	220	220
	B	90.9	-	-	108.9	108.9	-	-	-
	B1	-	96.9	91.9	-	-	117.9	108.4	147
	C	113.9	-	-	138.9	140.9	-	-	-
	C1	-	123.9	123.9	-	-	144.9	145.9	176.5
Center mounting	**D**	140	-	-	170	220	-	-	-
Short taper mounting to DIN 55026	**D1**	-	A5	A6	-	-	A6	A8	A8
	E	102	102	102	130	130	130	130	156
	F	51	51	51	74	74	74	74	95
	G	3 x M10	-	-	6 x M12	6 x M16	-	-	-
	G1	-	4 x M10	4 x M12	-	-	4 x M12	4 x M16	6 x M16
	Kmax.	7.5	7.5	7.5	7.5	7.5	7.5	7.5	7.5
	L	8.5	-	-	14.0	16.0	-	-	-
	L1	-	24.5	24.5	-	-	26.0	27.0	41
	M	4.5	4.5	4.5	4.5	4.5	4.5	4.5	6.0
	N	104.8	-	-	133.4	171.4	-	-	-
	N1	-	104.8	133.4	-	-	133.4	171.4	171.4
	P	18	-	-	14	20	-	-	-
	P1	-	14	14.5	-	-	16	16	27.5
	R	28	28	28	39.5	39.5	39.5	39.5	51
	S	6	-	-	6	6	-	-	-
Pressure sleeve thread/ **thread depth**	**T**	M66 x 1.5/**8**			M90 x 1.5/**8**				M114 x 2/**11**
	U	54			77				99
	W	62.5			83				107
Max. speed	r.p.m.	6000	6000	6000	5000	5000	5000	4000	4000
Max. actuating force	daN	2500	2500	2500	3000	3000	3000	3500	3500
Max. gripping force	daN	5400	5400	5400	6500	6500	6500	7300	7300
Weight without collets	kg	6.1	7.7	7.8	13.6	14.2	14.1	18.1	20.8
Rec. actuating cylinders	**Type**	**VNK-T2 102-46**			**VNK-T2 150-67**				**VNK-T2 200-86**
Speed	r.p.m.	7000			5500				4000

SMW-AUTOBLOK
259

KSZ-MB

Collet chuck

Ordering review

Supply range: Chuck and mounting bolts

Size / Spindle mounting	KSZ-MB 40	KSZ-MB 60	KSZ-MB 80 - 193 E
Centering rim standard	Z140 088174	Z170 088175	Z220* 091209*
Centering rim large		Z220 088176	
A 05	088180		
A 06	088179	088178	
A 08		088177	091209*

* **Attention:** KSZ-MB 80-193E with standard centering rim (Id. No. 091209) has outside centering 220 mm (and also inside taper A8)

Accessories for KSZ-MB

Size / Accessories	KSZ-MB 40	KSZ-MB 60	KSZ-MB 80
Blank adapter	0360790	0360810	
Reduction for smaller collets (comprising pressure sleeve and cap nut)	KSZ-MB size 40 to size 26 0360720/0361792	KSZ-MB size 60 to size 40 0360121/0361360	KSZ-MB size 80 to size 40 0362082/0360135
			KSZ-MB size 80 to size 60 0362081/0360134

Collets for KSZ-MB 40

Steel collets DIN 6343 series 173 E
ROUND*

Ø	**3**	**3.5**	**4**	**4.5**	**5**	**5.5**	**6**	**6.5**	**7**	**7.5**	**8**	**8.5**	**9**
Id. No.	012961	012962	012963	012964	012965	012966	012967	012968	012969	012970	012971	012972	012973
Ø	**9.5**	**10**	**10.5**	**11**	**11.5**	**12**	**12.5**	**13**	**13.5**	**14**	**14.5**	**15**	**15.5**
Id. No.	012974	012975	012976	012977	012978	012979	012980	012981	012982	012983	012984	012985	012986
Ø	**16**	**16.5**	**17**	**17.5**	**18**	**18.5**	**19**	**19.5**	**20**	**20.5**	**21**	**21.5**	**22**
Id. No.	012987	012988	012989	012990	012991	012992	012993	012994	012995	012996	012997	012998	012999
Ø	**22.5**	**23**	**23.5**	**24**	**24.5**	**25**	**25.5**	**26**	**26.5**	**27**	**27.5**	**28**	**28.5**
Id. No.	013000	013001	013002	013003	013004	013005	013006	013007	013008	013009	013010	013011	013012
Ø	**29**	**29.5**	**30**	**30.5**	**31**	**31.5**	**32**	**32.5**	**33**	**33.5**	**34**	**34.5**	**35**
Id. No.	013013	013014	013015	013016	013017	013018	013019	013020	013021	013022	013023	013024	013025
Ø	**35.5**	**36**	**36.5**	**37**	**37.5**	**38**	**38.5**	**39**	**39.5**	**40**	**40.5**	**41**	**41.5**
Id. No.	013026	013027	013028	013029	013030	013031	013032	013033	013034	013035	013036	013037	013038
Ø	**42**												
Id. No.	013039												

HEXAGONAL**

⬡	**6**	**7**	**8**	**9**	**10**	**11**	**12**	**13**	**14**	**15**	**16**	**17**	**19**
Id. No.	013040	013041	013042	013043	013044	013045	013046	013047	013048	013049	013050	013051	013052
⬡	**20**	**21**	**22**	**24**	**26**	**27**	**28**	**30**	**31**	**32**	**36**		
Id. No.	016428	016429	013053	013054	016430	013055	016431	013056	016432	013057	013058		

SQUARE**

□	**6**	**7**	**8**	**9**	**10**	**11**	**12**	**13**	**14**	**15**	**16**	**18**	**20**
Id. No.	013059	013060	013061	013062	013063	013064	013065	013066	013067	013068	013069	013070	013071
□	**22**	**25**	**28**										
Id. No.	013072	013073	013074										

Rubberflex collets series 36 (recommended for raw part clamping)
ROUND

Ø	**7-9**	**9-11**	**11-13**	**13-15**	**15-17**	**17-19**	**19-21**	**21-23**	**23-25**	**25-27**	**27-29**	**29-31**	**31-33**
Id. No.	013076	013077	013078	013079	013080	013081	013082	013093	013083	013084	013085	013086	013087
Ø	**33-35**	**35-37**	**37-39**	**39-41**	**41-43**								
Id. No.	013088	013089	013090	013091	013092								

* Concentricity according to DIN 6343
** Concentricity has to be agreed

Collets for KSZ-MB 60

Steel collets DIN 6343 series 185 E
ROUND*

Ø	**4**	**5**	**6**	**7**	**8**	**9**	**10**	**11**	**12**	**13**	**14**	**15**	**16**
Id. No.	013112	013113	013114	013115	013116	013117	013118	013119	013120	013121	013122	013123	013124
Ø	**17**	**18**	**19**	**20**	**21**	**22**	**23**	**24**	**25**	**26**	**27**	**28**	**29**
Id. No.	013125	013126	013127	013128	013129	013130	013131	013132	013133	016434	013134	013135	013136
Ø	**30**	**31**	**32**	**33**	**34**	**35**	**36**	**37**	**38**	**39**	**40**	**41**	**42**
Id. No.	013137	013138	013139	013140	013141	013142	013143	013144	016435	013145	013146	013147	013148
Ø	**43**	**44**	**45**	**46**	**47**	**48**	**49**	**50**	**51**	**52**	**53**	**54**	**55**
Id. No.	013149	013150	013151	013152	013153	013154	013155	013156	013157	013158	013159	013160	013161
Ø	**56**	**57**	**58**	**59**	**60**								
Id. No.	013162	013163	013164	013165	013166								

HEXAGONAL**

⬡	**8**	**9**	**10**	**11**	**12**	**13**	**14**	**15**	**16**	**17**	**19**	**22**	**24**
Id. No.	013167	013168	013169	013170	013171	013172	013173	013174	013175	013176	013177	013178	013179
⬡	**27**	**30**	**32**	**36**	**41**	**50**							
Id. No.	013180	013181	013182	013183	019312	019592							

SQUARE**

□	**7**	**8**	**9**	**10**	**11**	**12**	**13**	**14**	**15**	**16**	**17**	**18**	**20**
Id. No.	013184	013185	013186	013187	013188	013189	013190	013191	013192	013193	019110	013194	013195
□	**22**	**25**	**28**	**30**	**32**	**35**	**36**	**40**					
Id. No.	013196	013197	013198	013199	013200	019111	013201	017800					

Rubberflex collets series 52 (recommended for raw part clamping)
ROUND

Ø	**35-37**	**37-39**	**39-41**	**41-43**	**43-45**	**45-47**	**47-49**	**49-51**	**51-53**	**53-55**	**55-57**	**57-59**	**59-61**
Id. No.	013203	013204	013205	013206	013207	013208	013209	013210	013211	013212	013213	013214	013215

Collets for KSZ-MB 80

Steel collets DIN 6343 series 193 E
ROUND*

Ø	**20**	**21**	**22**	**23**	**24**	**25**	**26**	**27**	**28**	**29**	**30**	**31**	**32**
Id. No.	013237	013238	013239	013240	013241	013242	013243	013244	013245	013246	013247	013248	013249
Ø	**33**	**34**	**35**	**36**	**37**	**38**	**39**	**40**	**41**	**42**	**43**	**44**	**45**
Id. No.	013250	013251	013252	013253	013254	013255	013256	013257	013258	013259	013260	013261	013262
Ø	**46**	**47**	**48**	**49**	**50**	**51**	**52**	**53**	**54**	**55**	**56**	**57**	**58**
Id. No.	013263	013264	013265	013266	013267	013268	013269	013270	013271	013272	013273	013274	013275
Ø	**59**	**60**	**61**	**62**	**63**	**64**	**65**	**66**	**67**	**68**	**69**	**70**	**71**
Id. No.	013276	013277	013278	013279	013280	013281	013282	013283	013284	013285	013286	013287	013288
Ø	**72**	**73**	**74**	**75**	**76**	**77**	**78**	**79**	**80**				
Id. No.	013289	013290	013291	013292	013293	013294	013295	013296	013297				

Further collets are available on request.
* Concentricity according to DIN 6343
** Concentricity has to be agreed

KSZ-DZN
KSZ-AZN

Draw collet chucks

Draw collet chuck for bar and shaft machining

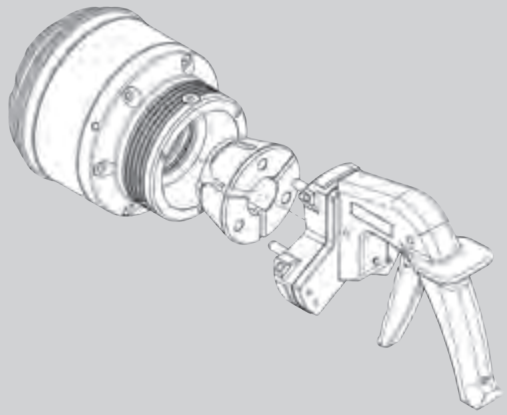

Application/customer benefits

- Safe clamping of bars and shafts.
- Quick change of collets with changing unit.
- Changing unit manual or pneumatic.
- Direct mounting of the collets into the body ensures highest concentricity.
- Collets available round, square, hexagonal or as blanks to be machined on the chuck.
- Available for stationary use.

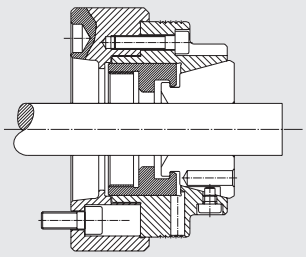

KSZ-DZN

- Safe clamping of bars.
- No push forces onto the machine spindle during clamping.
- Highest axial and radial rigidity with draw collet system.
- Parallel clamping of the collets.
- Flexible use because of large range of the collets.

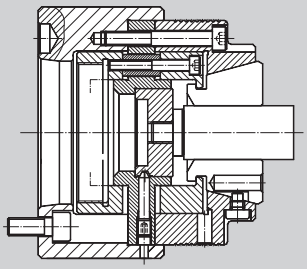

KSZ-AZN

- Rigid axial workstop for shafts.
- High axial positioning accuracy of the shafts because of pull down effect onto the workstop.
- Full through hole available because of quick change of axial workstop.
- Special workstops available on request.

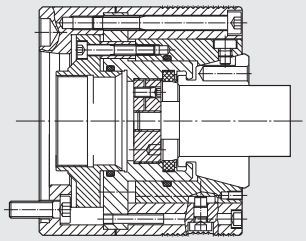

KSZ-NZN

- Ideal for opposed twin spindle machines.
- Collet in axial fixed position = no axial movement and axial forces when clamping.
- Rigid axial workstop for shafts.
- Full through hole available because of quick change of axial workstop.
- Special workstops available on request.

KSZ-DZN

Draw collet chuck

**Chuck in open position =
Right end position**

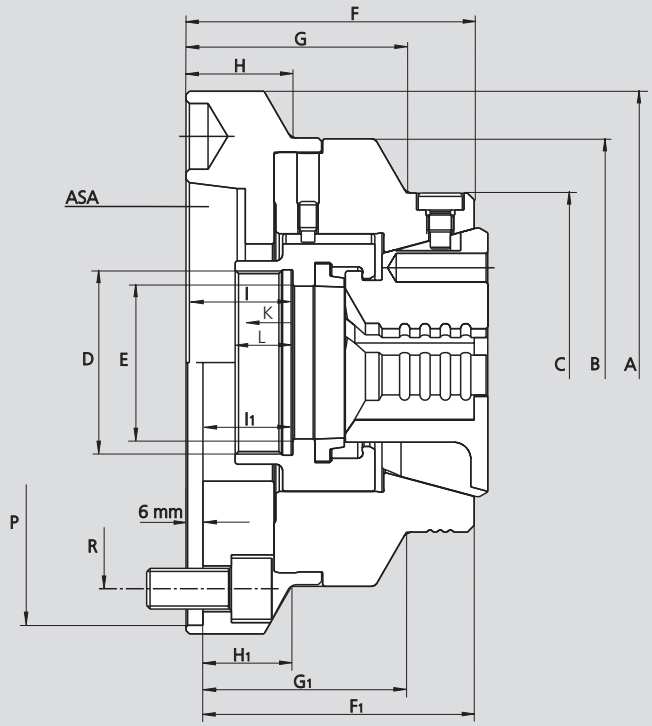

Subject to technical changes.
For more detailed information please ask our customer service.

SMW-AUTOBLOK Type		KSZ-DZN 42			KSZ-DZN 65				
Mounting		**Z140**	**A5**	**A6**	**Z140**	**Z170**	**A5**	**A6**	**A8**
Id. No.		205073	201338	201339	205072	205074	201341	201342	201343
	A	150	132	160	157	180	157	157	202
	B	132	-	132	-	157	-	-	157
	C	100	100	100	122	122	122	122	122
	D	M54 x 1.5	M54 x 1.5	M54 x 1.5	M78 x 1.5	M78 x 1.5	M78 x 1.5	M78 x 1.5	M78 x 1.5
	E	45	45	45	68	68	68	68	68
	F	-	90	90	-	-	100	98	102
	F1	75	-	-	100	98	-	-	-
	G	-	70	70	-	-	70	68	72
	G1	55	-	-	70	68	-	-	-
	H	-	-	36	-	-	-	-	-
	H1	15	-	-	-	13	-	-	-
	I	-	39	39	-	-	41.5	39.5	43.5
	I1	24	-	-	41.5	39.5	-	-	-
Axial stroke	**K**	5	5	5	4.5	4.5	4.5	4.5	4.5
	L	17	17	17	17.5	17.5	17.5	17.5	17.5
	P H6	140	-	-	140	170	-	-	-
	R	104.8 / M10 3x120°	 4x90°	133.4 / M12 4x90°	104.8 / M10 3x120°	133.4 / M12 6x60°	104.8 / M10 4x90°	133.4 / M12 4x90°	171.4 / M16 4x90°
Max. speed	r.p.m.	7000	7000	7000	6000	6000	6000	6000	6000
Max. actuating force	daN	3500	3500	3500	4500	4500	4500	4500	4500
Max. gripping force	daN	8000	8000	8000	10500	10500	10500	10500	10500
Weight without collets	kg	5.2	5.8	6.7	8.6	8.8	8.4	7.6	9.8
Rec. actuating cylinders	**Type**	**VNK-T2 102-46**			**VNK-T2 150-67**				
Speed	r.p.m.	8000			5500				

Changing unit

Size / Accessories	KSZ-DZN 42	KSZ-DZN 65
Manual	196842	196844
Pneumatic	192151	192153

SMW-AUTOBLOK
259

KSZ-AZN

Draw collet chucks

Draw collet chuck for bar and shaft machining

Chuck in open position = Right end position

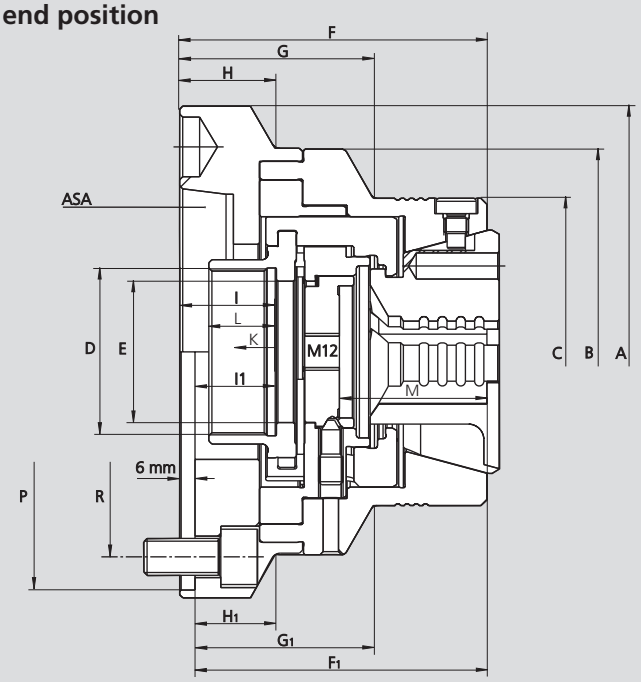

Subject to technical changes.
For more detailed information please ask our customer service.

SMW-AUTOBLOK Type		KSZ-AZN 42			KSZ-AZN 65				
Mounting		**Z140**	**A5**	**A6**	**Z140**	**Z170**	**A5**	**A6**	**A8**
Id. No.		205066	201346	201347	205075	205076	201349	201350	201351
	A	150	132	160	157	180	157	157	202
	B	132	-	132	-	157	-	-	157
	C	100	100	100	122	122	122	122	122
	D	M54 x 1.5	M54 x 1.5	M54 x 1.5	M78 x 1.5	M78 x 1.5	M78 x 1.5	M78 x 1.5	M78 x 1.5
	E	46	46	46	68	68	68	68	68
	F	-	105	105	-	-	112	110	114
	F1	90	-	-	112	110	-	-	-
	G	-	68	68	-	-	69	67	71
	G1	53	-	-	69	67	-	-	-
	H	-	-	36	-	-	-	-	47
	H1	15	-	-	-	13	-	-	-
	I	-	39	39	-	-	41.5	39.5	43.5
	I1	24	-	-	41.5	39.5	-	-	-
Axial stroke	**K**	4.5	4.5	4.5	4.5	4.5	4.5	4.5	4.5
	L	17	17	17	17.5	17.5	17.5	17.5	17.5
	M	48	48	48	54	54	54	54	54
	P H6	140	-	-	140	170	-	-	-
	R	104.8 / M10 3x120°	 4x90°	133.4 / M12 4x90°	104.8 / M10 3x120°	133.4 / M12 6x60°	104.8 / M10 4x90°	133.4 / M12 4x90°	171.4 / M16 4x90°
Max. speed	r.p.m.	7000	7000	7000	6000	6000	6000	6000	6000
Max. actuating force	daN	3500	3500	3500	4500	4500	4500	4500	4500
Max. gripping force	daN	8000	8000	8000	10500	10500	10500	10500	10500
Weight without collets	kg	5.8	6.2	7.3	9.5	9.5	9.3	8.5	10.7
Rec. actuating cylinders	**Type**	**VNK-T2 102-46**			**VNK-T2 150-67**				
Speed	r.p.m.	8000			5500				

Changing unit

Size / Accessories	KSZ-AZN 42	KSZ-AZN 65
Manual	196842	196844
Pneumatic	192151	192153

Push collet chuck for bar and shaft machining

KSZ-NZN

Collet chucks

Chuck in open position = Left end position

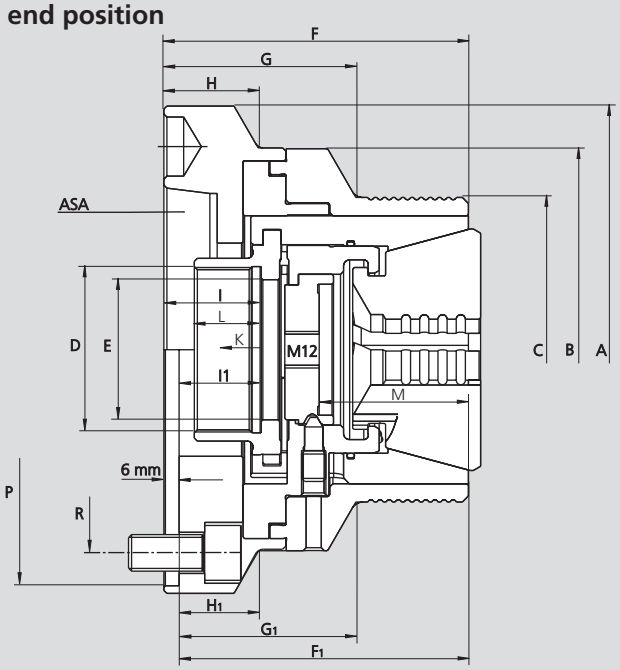

Subject to technical changes.
For more detailed information please ask our customer service.

SMW-AUTOBLOK Type		KSZ-NZN 42			KSZ-NZN 65				
Mounting		**Z140**	**A5**	**A6**	**Z140**	**Z170**	**A5**	**A6**	**A8**
Id. No.		205077	201354	201355	205078	205080	201357	201358	201359
	A	150	132	160	157	180	157	157	202
	B	132	-	132	-	157	-	-	157
	C	100	100	100	122	122	122	122	122
	D	M54 x 1.5	M54 x 1.5	M54 x 1.5	M78 x 1.5	M78 x 1.5	M78 x 1.5	M78 x 1.5	M78 x 1.5
	E	46	46	46	68	68	68	68	68
	F	-	105	105	-	-	112	110	114
	F1	90	-	-	112	110	-	-	-
	G	-	68	68	-	-	69	67	71
	G1	53	-	-	69	67	-	-	-
	H	-	-	36	-	-	-	-	17
	H1	15	-	-	-	13	-	-	-
	I	-	34.5	34.5	-	-	37	35	39
	I1	19.5	-	-	37	35	-	-	-
Axial stroke	**K**	4.5	4.5	4.5	4.5	4.5	4.5	4.5	4.5
	L	17	17	17	17.5	17.5	17.5	17.5	17.5
	M	48	48	48	54	54	54	54	54
	P H6	140	-	-	140	170	-	-	-
	R	104.8 / M10 3x120°	4x90°	133.4 / M12 4x90°	104.8 / M10 3x120°	133.4 / M12 6x60°	104.8 / M10 4x90°	133.4 / M12 4x90°	171.4 / M16 4x90°
Max. speed	r.p.m.	7000	7000	7000	6000	6000	6000	6000	6000
Max. actuating force	daN	3500	3500	3500	4500	4500	4500	4500	4500
Max. gripping force	daN	8000	8000	8000	10500	10500	10500	10500	10500
Weight without collets	kg	5.9	6.3	7.4	9.6	9.6	9.4	8.6	10.8
Rec. actuating cylinders	**Type**	**VNK-T2 102-46**			**VNK-T2 150-67**				
Speed	r.p.m.	8000			5500				

Changing unit

Size / Accessories	KSZ-NZN 42	KSZ-NZN 65
Manual	196842	196844
Pneumatic	192151	192153

SMW-AUTOBLOK
259

Collets for KSZ-DZN 42 / KSZ-AZN 42 / KSZ-NZN 42

Steel collets with axial and radial grooves (△ smooth, △△ radial grooves)
ROUND*

Ø	**4△**	**5△**	**6△**	**7△**	**8△△**	**9△△**	**10△△**	**11**	**12**	**13**	**14**	**15**	**16**
Id. No.	192173	192174	192175	192176	192177	192178	192179	192180	192181	192182	192183	192184	192185
Ø	**17**	**18**	**19**	**20**	**21**	**22**	**23**	**24**	**25**	**26**	**27**	**28**	**29**
Id. No.	192186	192187	192188	192189	192190	192191	192192	192193	192194	192195	192196	192197	192198
Ø	**30**	**31**	**32**	**33**	**34**	**35**	**36**	**37**	**38**	**39**	**40**	**41**	**42**
Id. No.	192199	192200	192201	192202	192203	192204	192205	192206	192207	192208	192209	192210	192211

Collets in 0.5 mm increments on request

Steel collets with smooth clamping surface
ROUND*

Ø	**4**	**5**	**6**	**7**	**8**	**9**	**10**	**11**	**12**	**13**	**14**	**15**	**16**
Id. No.	192173	192174	192175	192176	193135	193136	193137	193138	193139	193140	193141	193142	193143
Ø	**17**	**18**	**19**	**20**	**21**	**22**	**23**	**24**	**25**	**26**	**27**	**28**	**29**
Id. No.	193144	192807	193145	192808	193146	193147	193148	193149	193150	193151	193152	193153	193154
Ø	**30**	**31**	**32**	**33**	**34**	**35**	**36**	**37**	**38**	**39**	**40**	**41**	**42**
Id. No.	193155	193156	193083	193157	193158	193159	193160	193161	193162	193163	193164	193165	193219

Collets in 0.5 mm increments on request

SQUARE**

□	**7△**	**8△△**	**9△△**	**10△△**	**11△△**	**12△△**	**13△△**	**14△△**	**15△△**	**16△△**	**17△△**	**18△△**	**19△△**
Id. No.	192212	192213	192214	192215	192216	192217	192218	192219	192220	192221	192222	192223	192224
□	**20△△**	**21△△**	**22△△**	**23△△**	**24△△**	**25△△**	**26△△**	**27△△**	**28△△**	**29△△**	**30△△**		
Id. No.	192225	192226	192227	192228	192229	192230	192231	192232	192233	192234	192235		

HEXAGONAL**

⬡	**7△**	**8△△**	**9△△**	**10△△**	**11△△**	**12△△**	**13△△**	**14△△**	**15△△**	**16△△**	**17△△**	**18△△**	**19△△**
Id. No.	192236	192237	192238	192239	192240	192241	192242	192243	192244	192245	192246	192247	192248
⬡	**20△△**	**21△△**	**22△△**	**23△△**	**24△△**	**25△△**	**26△△**	**27△△**	**28△△**	**29△△**	**30△△**	**31△△**	**32△△**
Id. No.	192249	192250	192251	192252	192253	192254	192255	192256	192257	192258	192259	192260	192261

Soft steel collets (pre-bored)
ROUND

Ø	**5**	**15**	**30**										
Id. No.	192262	192263	192264										

Boring ring 42 for soft steel collets

Id. No.	193399												

* Concentricity similar DIN 6343
** Concentricity has to be agreed

Collets for KSZ-DZN 65 / KSZ-AZN 65 / KSZ-NZN 65

Steel collets with axial and radial grooves (△ smooth, △△ radial grooves)
ROUND*

Ø	5△	6△	7△	8△△	9△△	10△△	11	12	13	14	15	16	17
Id. No.	192265	192266	192267	192268	192269	192270	192271	192272	192273	192274	192275	192276	192277
Ø	18	19	20	21	22	23	24	25	26	27	28	29	30
Id. No.	192278	192279	192280	192281	192282	192283	192284	192285	192286	192287	192288	192289	192290
Ø	31	32	33	34	35	36	37	38	39	40	41	42	43
Id. No.	192291	192292	192293	192294	192295	192296	192297	192298	192299	192300	192301	192302	192303
Ø	44	45	46	47	48	49	50	51	52	53	54	55	56
Id. No.	192304	192305	192306	192307	192308	192309	192310	192311	192312	192313	192314	192315	192316
Ø	57	58	59	60	61	62	63	64	65				
Id. No.	192317	192318	192319	192320	192321	192322	192323	192324	192325				

Collets in 0.5 mm increments on request

Steel collets with smooth clamping surface
ROUND*

Ø	5	6	7	8	9	10	11	12	13	14	15	16	17
Id. No.	192265	192266	192267	193172	193173	192682	193174	192787	193175	193176	193177	193169	193178
Ø	18	19	20	21	22	23	24	25	26	27	28	29	30
Id. No.	193179	193180	193181	193182	192683	193183	193170	193065	193184	193066	193068	193069	193070
Ø	31	32	33	34	35	36	37	38	39	40	41	42	43
Id. No.	193185	192684	193186	193187	193188	193189	193190	193191	193192	192685	193193	193194	193171
Ø	44	45	46	47	48	49	50	51	52	53	54	55	56
Id. No.	193196	193197	193198	193199	193200	193201	193202	193203	193204	193205	193206	193207	193208
Ø	57	58	59	60	61	62	63	64	65				
Id. No.	193195	193209	193210	193211	193212	193213	193214	193215	193216				

Collets in 0.5 mm increments on request

SQUARE**

□	8△△	9△△	10△△	11△△	12△△	13△△	14△△	15△△	16△△	17△△	18△△	19△△	20△△
Id. No.	192326	192327	192328	192329	192330	192331	192332	192333	192334	192335	192336	192337	192338
□	21△△	22△△	23△△	24△△	25△△	26△△	27△△	28△△	29△△	30△△	31△△	32△△	33△△
Id. No.	192339	192340	192341	192342	192343	192344	192345	192346	192347	192348	192349	192350	192351
□	34△△	35△△	36△△	37△△	38△△	39△△	40△△	41△△	42△△	43△△	44△△	45△△	46△△
Id. No.	192352	192353	192354	192355	192356	192357	192358	192359	192360	192361	192362	192363	192364

HEXAGONAL**

⬡	10△△	11△△	12△△	13△△	14△△	15△△	16△△	17△△	18△△	19△△	20△△	21△△	22△△
Id. No.	192365	192366	192367	192368	192369	192370	192371	192372	192373	192374	192375	192376	192377
⬡	23△△	24△△	25△△	26△△	27△△	28△△	29△△	30△△	31△△	32△△	33△△	34△△	35△△
Id. No.	192378	192379	192380	192381	192382	192383	192384	192385	192386	192387	192388	192389	192390
⬡	36△△	37△△	38△△	39△△	40△△	41△△	42△△	43△△	44△△	45△△	46△△	47△△	48△△
Id. No.	192391	192392	192393	192394	192395	192396	192397	192398	192399	192400	192401	192402	192403
⬡	49△△	50△△											
Id. No.	192404	192405											

Soft steel collets (pre-bored)
ROUND

Ø	8	20	40										
Id. No.	192406	192407	192408										

Boring ring 65 for soft steel collets

Id. No.	193400												

* Concentricity similar DIN 6343
** Concentricity has to be agreed

KSZ-AZL

Draw collet chucks

Draw collet chuck for bar and shaft machining/ including preparation for air sensing

Chuck in open position = Right end position

The workstops illustrated in blue (inside or on the front side) are optional and can be delivered on request.

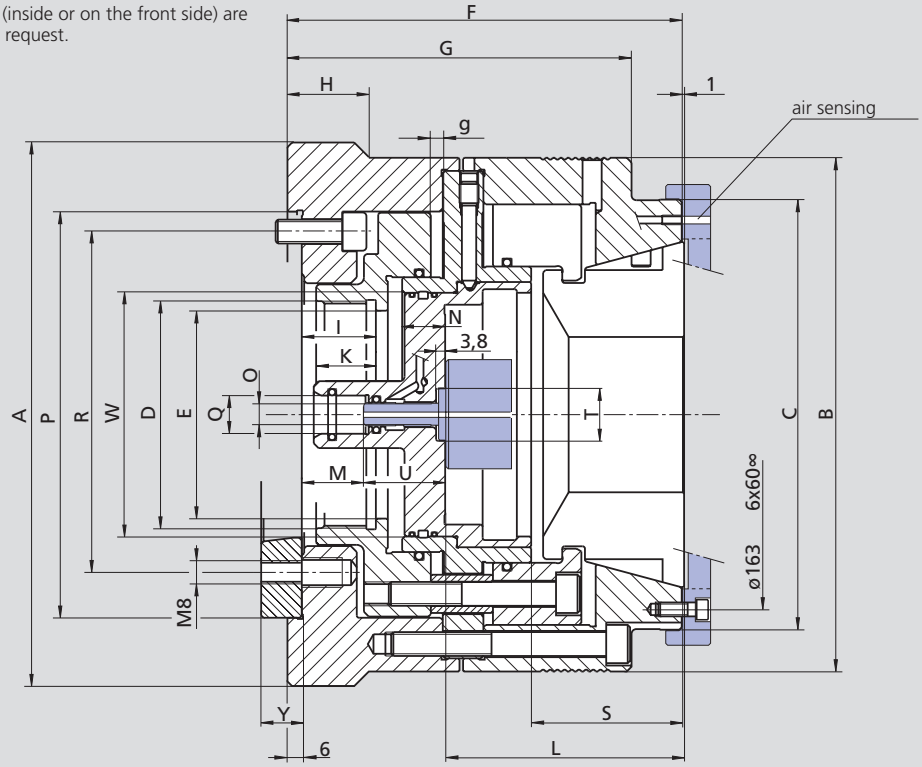

Subject to technical changes.
For more detailed information please ask our customer service.

SMW-AUTOBLOK Type		KSZ-AZL 100											
Mounting		**Z170**			**Z220**			**A6**			**A8**		
Id. No.		194741			195244			194783			195245		
	A	215			230			215			230		
	B	-			215			-			215		
	C	180			180			180			180		
	D	M95 x 2			M115 x 2			M95 x 2			M115 x 2		
	E	87			107			87			107		
	F	165			165			176			178		
	G	144			144			155			157		
	H	-			37			-			37		
	I	36			36			36			36		
	K	25			25			25			25		
	L	99			99			99			99		
	M	25			25			25			25		
	N	17			17			17			17		
	O	M12			M12			M12			M12		
	P H6	170			220								
	Q	16			16			16			16		
	R	133.4	6 x 60°	M12	171.4	6 x 60°	M16	133.4	6 x 60°	M12	171.4	6 x 60°	M16
	S	63			63			63			63		
	T	22			22			22			22		
	U	34.3			34.3			34.3			34.3		
	V	M12			M12			M12			M12		
	W	102			102			102			102		
	X	111			111			111			111		
	Y	-			-			17			19		
Stroke	**g**	9			9			9			9		
Max. speed	r.p.m.	3800			3800			3800			3800		
Max. actuating force	daN	6500			6500			6500			6500		
Max. gripping force	daN	15000			15000			15000			15000		
Weight without collets	kg	29			30			34.5			35		
Rec. actuating cylinder	**Type**	**VNK-T2 200-86**			**VNK-T2 225-95**			**VNK-T2 200-86**			**VNK-T2 225-95**		
					VNK-T2 250-110						**VNK-T2 250-110**		
Speed	r.p.m.	4500			4000 /3600			4500			4000 /3600		

Ordering review

Supply range: Chuck and mounting bolts

Accessories \ Size	KSZ-AZL 100
Z 170	194741
A 06	194783
Z 220	195244
A 08	195245

Changing unit

Accessories \ Size	KSZ-AZL 100
Pneumatic	194744

Collets for KSZ-AZL

Steel collets with axial and radial grooves ROUND*

Ø	**42**	**43**	**44**	**45**	**46**	**47**	**48**	**49**	**50**	**51**	**52**	**53**	**54**
Id. No.	195081	195082	195083	195084	195085	195086	195087	195088	195089	195090	195091	195092	195093
Ø	**55**	**56**	**57**	**58**	**59**	**60**	**61**	**62**	**63**	**64**	**65**	**66**	**67**
Id. No.	195094	195095	195096	195097	195098	195099	195100	195101	195102	195103	195104	195105	195106
Ø	**68**	**69**	**70**	**71**	**72**	**73**	**74**	**75**	**76**	**77**	**78**	**79**	**80**
Id. No.	195107	195108	195109	195110	195111	195112	195113	195114	195115	195116	195117	195118	195119
Ø	**81**	**82**	**83**	**84**	**85**	**86**	**87**	**88**	**89**	**90**	**91**	**92**	**93**
Id. No.	195120	195121	195122	195123	195124	195125	195126	195127	195128	195129	195130	195131	195132
Ø	**94**	**95**	**96**	**97**	**98**	**99**	**100**						
Id. No.	195133	195134	195135	195136	195137	195138	194742						

Steel collets with smooth clamping surface ROUND*

Ø	**42**	**43**	**44**	**45**	**46**	**47**	**48**	**49**	**50**	**51**	**52**	**53**	**54**
Id. No.	195141	195142	195143	195144	195145	195146	195147	195148	195149	195150	195151	195152	195153
Ø	**55**	**56**	**57**	**58**	**59**	**60**	**61**	**62**	**63**	**64**	**65**	**66**	**67**
Id. No.	195154	195155	195156	195157	195158	195159	195160	195161	195162	195163	195164	195165	195166
Ø	**68**	**69**	**70**	**71**	**72**	**73**	**74**	**75**	**76**	**77**	**78**	**79**	**80**
Id. No.	195167	195168	195169	195170	195171	195172	195173	195174	195175	195176	195177	195178	195179
Ø	**81**	**82**	**83**	**84**	**85**	**86**	**87**	**88**	**89**	**90**	**91**	**92**	**93**
Id. No.	195180	195181	195182	195183	195184	195185	195186	195187	195188	194743	195189	195190	195191
Ø	**94**	**95**	**96**	**97**	**98**	**99**	**100**						
Id. No.	195192	195193	195194	195195	195196	195197	195198						

* Concentricity similar DIN 6343

SMW-AUTOBLOK
259

GF 80

INCH SERRATION
Bar pulling chuck

Spring actuated bar pulling chuck

■ For stationary outside clamping

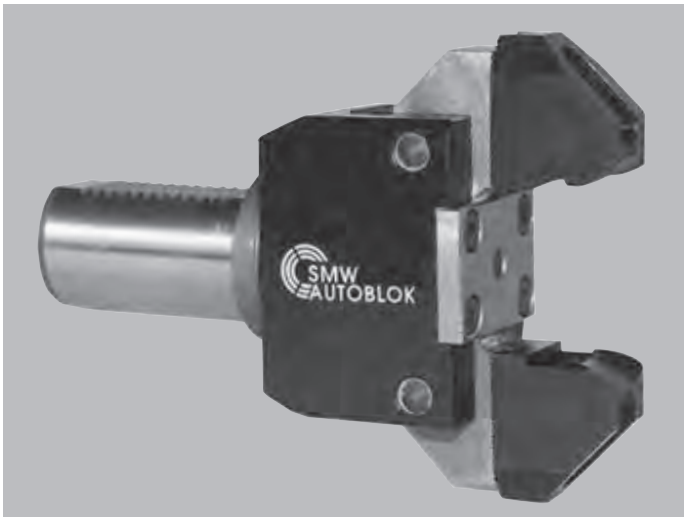

Application/customer benefits

- Clamping and positioning of short bar material.
- Positioning of shaft type components in automatic production cycle.

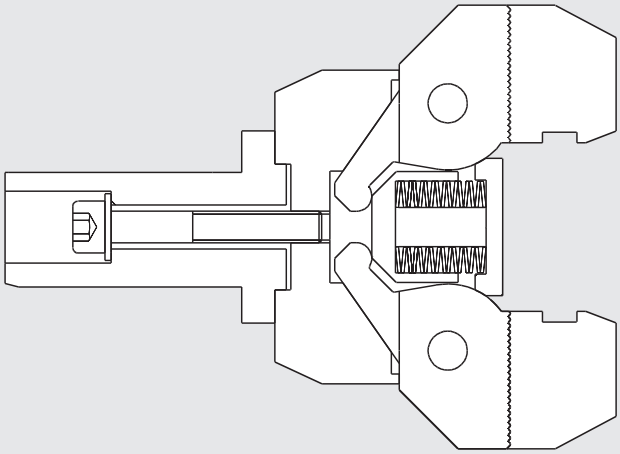

Profitability

- Direct mounting to the turret of the lathe - actuation device is not necessary.
- Suitable to all tool mounting systems.
- Only one tool place of turret is required.
- Simple production of special jaws for special bar profiles.
- High flexibility at small quantities.
- Simple set-up.
- Simple, safe spring pre-loading of jaws.
- Hardened/quenched clamping arms ensure long service life.

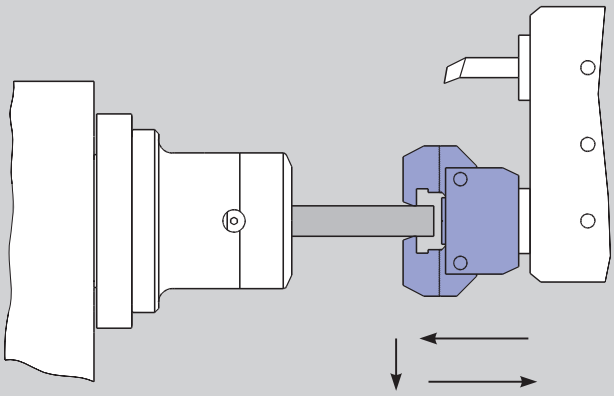

Function

- Move bar pulling chuck GF onto the workpiece with the turret in Z-axis.
- The bar pulling chuck is clamping self acting via spring pre-loading.
- Open collet chuck.
- Move turret to position workpiece.
- Close collet chuck.
- Remove bar pulling chuck GF in Z-axis.

GF 80

INCH SERRATION
Bar pulling chuck

Main dimensions and technical data

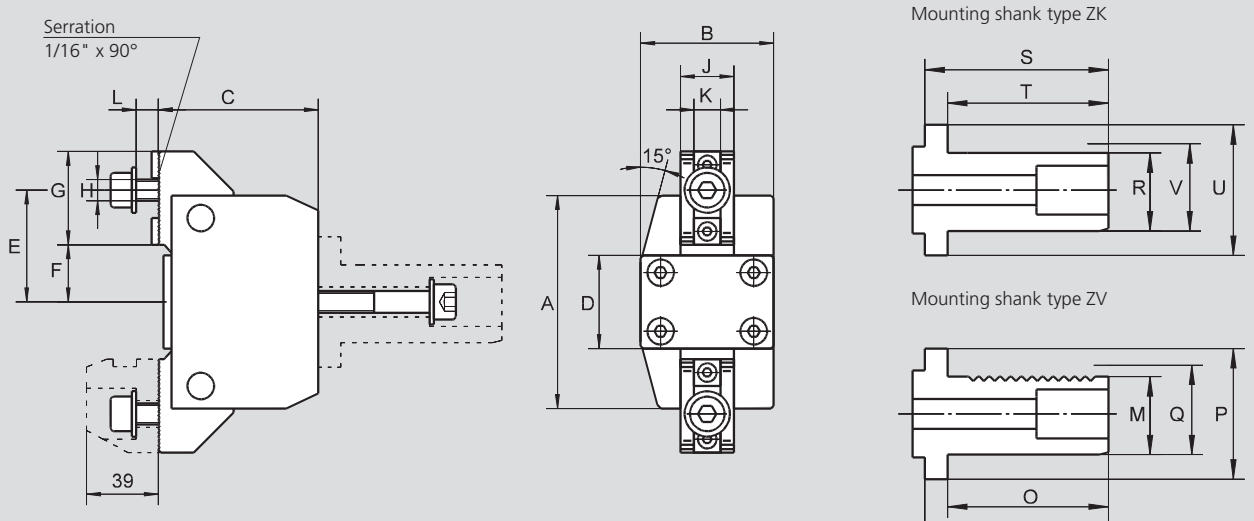

Subject to technical changes.
For more detailed information please ask our customer service.

Chuck type	A	B	C	D	E	F	G	H	J	K	L	Stroke per jaw	Gripping force (daN)
GF 80	80	50	60	35	42	21.5	35	M8	20	10	8	4	250

Mounting shank	M	N	O	P	Q	R	S	T	U	V
ZV 20	18	47	35	32	20					
ZV 30	27	63	55	48	30					
ZV 40	36	71	63	48	40					
ZV 50	45	86	78	58	50					
ZK 30						26	63	55	48	30
ZK 40						35	71	63	48	40
ZK 50						44	86	78	58	50

Ordering review bar pulling chuck GF 80

Standard supply range: Bar pulling chuck GF 80 with/without shank, mounting bolts, without jaws

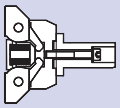

Type	GF 80	GF 80-ZV 20	GF 80-ZV 30	GF 80-ZV 40	GF 80-ZV 50	GF 80-ZK 30	GF 80-ZK 40	GF 80-ZK 50
Shank	without shank	ZV 20	ZV 30	ZV 40	ZV 50	ZK 30	ZK 40	ZK50
Id. No.	010903	089614	089615	089616	089617	089618	089619	089620

Separate mounting shanks ZV/ZK

Mounting shanks type ZV DIN 69880 (serrated) **/mounting shanks type ZK** (with clamping area)

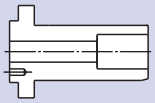

Shank Type	ZV 20	ZV 30	ZV 40	ZV 50	ZK 30	ZK 40	ZK 50
Id. No.	016339	012383	012384	012385	060088	060214	012389

Top jaws type GFB

Standard supply range: 1 set (= 2 pieces) clamping jaws without mounting bolts

Type	GFB 1	GFB 2	GFB 3	GFB 4	GFB 5
Clamping range (mm)	5 - 25	25 - 45	45 - 65	65 - 80	80 - 100
Id. No.	016348	016349	016350	016351	016352

6

Manual or power operated expanding mandrels
Adapter flanges

Page 250

EM-A EM-AL

Hand or power operated expanding mandrels Ø 14.7 - 129.7 mm

- Size 1 - 11
- Large expansibility 1 - 2 mm depending on size
- Flange mounting
- Very rigid design

Page 252

EM-B

Hand or power operated expanding mandrels Ø 16.0 - 129.5 mm

- Size 0 - 4
- Large expansibility 0.5 - 1.5 mm depending on size
- Flange mounting
- Very rigid design

Page 254

EM-S

Power operated segment sleeve mandrels Ø 18 - 105 mm

- For turning grinding and milling
- Size 1 - 4
- Case hardened / wear resistant segment sleeves
- Large expansibility 0.8 - 1.2 mm depending on size
- Quick change for segment sleeves
- Very rigid design

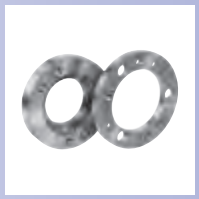

Page 256

Adapter flanges EM-A, EM-B

ISO-A for expanding mandrels

- Mandrels EM-A and EM-B have cylindrical mounting
- Adapters for ISO-A 702/1-DIN 55026 spindle noses

Page 257

Special expanding mandrels

7

EM-A/ EM-AL

Expanding mandrel
Manual or power operated

Expanding mandrels Ø 14.7 - 129.7 mm

- **Size 1 - 11**
- **Large expansibility**
- **EM-AL: body lengthened**

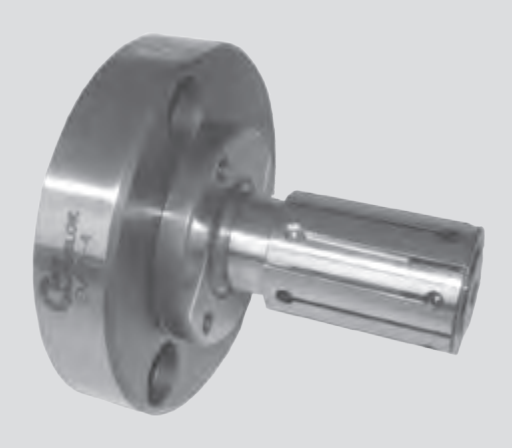

Application/customer benefits

- For turning, milling, grinding and gear cutting operations
- High accuracy and torque transmission because of fixed arbor
- Axial pull down by axial movement of the clamping sleeve during actuation
- Quick set-up

Technical features

- Large expansibility 1-2 mm depending on size
- Hand or power operated
- Flange mounting
- Very rigid design
- Tapped holes at the front face to mount axial stops
- Clamping sleeves are also available in siliconized version
- EM-AL: clamping mandrel with extra long body

Standard equipment

Basic mandrel with draw bolt for power operation
Mounting bolts

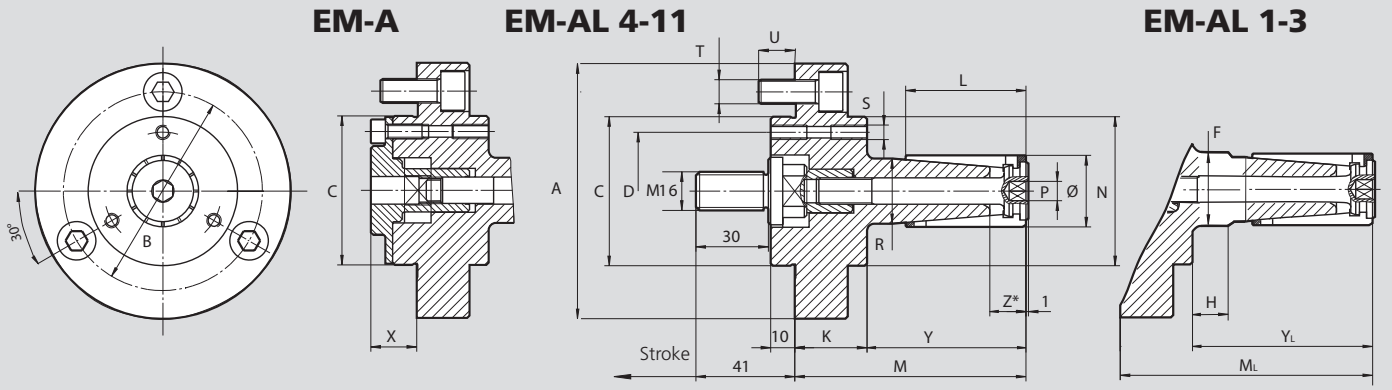

Subject to technical changes.
For more detailed information please ask our customer service.

SMW-AUTOBLOK Type	EM-A-1 EM-AL-1	EM-A-2 EM-AL-2	EM-A-3 EM-AL-3	EM-A-4 EM-AL-4	EM-A-5 EM-AL-5	EM-A-6 EM-AL-6	EM-A-7 EM-AL-7	EM-A-8 EM-AL-8	EM-A-9 EM-AL-9	EM-A-10 EM-AL-10	EM-A-11 EM-AL-11
EM-A Id. No. (power operated)	68100110	68100210	68100310	68100410	68100510	68100610	68100710	68100810	68100910	68101010	68101110
EM-AL Id. No. (power operated)	68100111	68100211	68100311	68100411	68100511	68100611	68100711	68100811	68100911	68101011	68101111
A	106	106	106	106	106	106	130	130	130	130	130
B	82.6	82.6	82.6	82.6	82.6	82.6	104.8	104.8	104.8	104.8	104.8
C g5	62	62	62	62	62	62	86	86	86	86	86
D	49	49	49	49	49	49	73	73	73	100	100
F	22	23	26	-	-	-	-	-	-	-	-
H	25	30	35	-	-	-	-	-	-	-	-
K	30	30	30	30	30	30	30	30	30	30	30
L	35	40	46	50	60	60	80	90	100	122	140
M	81	86	92	96	106	106	132	142	152	174	195
M_L	106	116	127	136	146	146	182	188	222	248	275
N	62	62	62	62	62	62	86	86	86	-	-
Ø mm	14.7-19.7	19.7-24.7	24.7-29.7	29.7-34.7	34.7-39.7	39.7-44.7	44.7-54.7	54.7-64.7	64.7-81.7	81.7-101.7	101.7-131.7
P SW	4	4	6	8	8	8	8	10	10	10	10
R h6	14	19	23	27	31.5	36	42	50	60	73	86
S (3x120°)	M6	M6	M6	M6	M6	M6	M6	M6	M6	M6	M6
T (3x120°)	M10	M10	M10	M10	M10	M10	M10	M10	M10	M10	M10
U	15	15	15	15	15	15	15	15	15	17	17
X	19	19	19	19	19	19	13	13	13	21	21
Y	51	56	62	66	76	76	102	112	122	144	165
Y_L	76	86	97	106	116	116	152	158	192	218	245
Z*	12.5	14.5	14.5	15	15.5	16	24	26	26.5	27.5	32
Manual kit EM-A	68110110	68110210	68110310	68110410	68110510	68110610	68110710	68110810	68110810	68111010	68111110
Manual kit EM-AL	68110111	68110211	68110311	68110411	68110511	68110611	68110711	68110811	68110811	68111011	68111111
Draw bolt power op. EM-A	68050110	68050210	68050310	68050410	68050510	68050610	68050710	68050710	68050710	68051010	68051110
Draw bolt power op. EM-AL	68050111	68050211	68050311	68050411	68050511	68050611	68050711	68050811	68050911	68051011	68051111

* Clamping on area Z only is not allowed.

Technical data

Stroke	mm	6	6	6	6	6	6	12	12	12	12	12
Max. actuating force	kN	7	7	12	12	15	20	20	20	25	25	30
Max. transm. torque	Nm	15	35	75	100	120	150	200	250	275	320	500
Actuating cylinder (rec.)		**SIN-S 70**	**SIN-S 70**	**SIN-S 85**	**SIN-S 85**	**SIN-S 85**	**SIN-S 100**	**SIN-S 100**	**SIN-S100**	**SIN-S-100**	**SIN-S-100**	**SIN-S 125**

All dimensions in unclamped position

SMW-AUTOBLOK 256

SMW-AUTOBLOK 259

Expanding mandrels Ø 14.7 - 129.7 mm

- Size 1 - 11
- Large expansibility
- EM-AL: body lengthened

EM-A/ EM-AL

Expanding mandrel
Manual or power operated

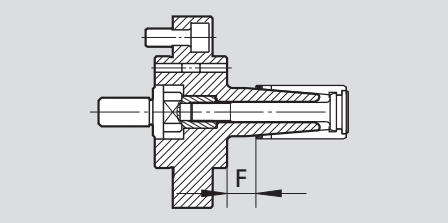

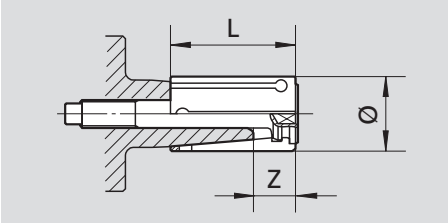

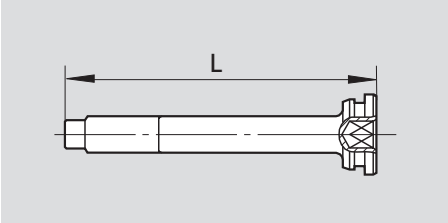

Basic mandrel			Clamping sleeve cpl. with actuating screw					Actuating screw	
Type	Id. No.	F	Id. No.	Ø	L	Expansibility	Z	Id. No.	L
EM-A-1	68100110	16	68300147	14.7	35	1	12.5	68030110	76.5
			68300157	15.7	35	1	12.5		
EM-AL-1	68100111	41	68300167	16.7	35	1	12.5		
			68300177	17.7	35	1	12.5		
			68300187	18.7	35	1	12.5		
EM-A-2	68100210	16	68300197	19.7	40	1	14.5	68030210	81
			68300207	20.7	40	1	14.5		
EM-AL-2	68100211	46	68300217	21.7	40	1	14.5		
			68300227	22.7	40	1	14.5		
			68300237	23.7	40	1	14.5		
EM-A-3	68100310	16	68300247	24.7	46	1	14.5	68030310	87.5
			68300257	25.7	46	1	14.5		
EM-AL-3	68100311	51	68300267	26.7	46	1	14.5		
			68300277	27.7	46	1	14.5		
			68300287	28.7	46	1	14.5		
EM-A-4	68100410	16	68300297	29.7	50	1	15	68030410	93
			68300307	30.7	50	1	15		
EM-AL-4	68100411	56	68300317	31.7	50	1	15		
			68300327	32.7	50	1	15		
			68300337	33.7	50	1	15		
EM-A-5	68100510	16	68300347	34.7	60	1	15.5	68030510	103
			68300357	35.7	60	1	15.5		
EM-AL-5	68100511	56	68300367	36.7	60	1	15.5		
			68300377	37.7	60	1	15.5		
			68300387	38.7	60	1	15.5		
EM-A-6	68100610	16	68300397	39.7	60	1	16	68030610	103
			68300407	40.7	60	1	16		
EM-AL-6	68100611	56	68300417	41.7	60	1	16		
			68300427	42.7	60	1	16		
			68300437	43.7	60	1	16		
EM-A-7	68100710	22	68300447	44.7	80	2	24	68030710	117
			68300467	46.7	80	2	24		
EM-AL-7	68100711	72	68300487	48.7	80	2	24		
			68300497	49.7	80	2	24		
			68300507	50.7	80	2	24		
			68300527	52.7	80	2	24		
EM-A-8	68100810	22	68300547	54.7	90	2	26	68030810	127
			68300567	56.7	90	2	26		
EM-AL-8	68100811	68	68300587	58.7	90	2	26		
			68300597	59.7	90	2	26		
			68300607	60.7	90	2	26		
			68300627	62.7	90	2	26		
EM-A-9	68100910	22	68300647	64.7	100	2	26.5	68030910	137
			68300667	66.7	100	2	26.5		
EM-AL-9	68100911	92	68300687	68.7	100	2	26.5		
			68300697	69.7	100	2	26.5		
			68300707	70.7	100	2	26.5		
			68300727	72.7	100	2	26.5		
			68300747	74.7	100	2	26.5		
			68300767	76.7	100	2	26.5		
			68300787	78.7	100	2	26.5		
			68300807	80.7	100	2	26.5		
EM-A-10	68101010	22	68300817	81.7	122	2	27.5	68031010	165
			68300837	83.7	122	2	27.5		
EM-AL-10	68101011	96	68300857	85.7	122	2	27.5		
			68300877	87.7	122	2	27.5		
			68300897	89.7	122	2	27.5		
			68300917	91.7	122	2	27.5		
			68300937	93.7	122	2	27.5		
			68300957	95.7	122	2	27.5		
			68300977	97.7	122	2	27.5		
			68300997	99.7	122	2	27.5		
EM-A-11	68101110	25	68301017	101.7	140	2	32	68031110	183
			68301037	103.7	140	2	32		
EM-AL-11	68101111	105	68301057	105.7	140	2	32		
			68301077	107.7	140	2	32		
			68301097	109.7	140	2	32		
			68301117	111.7	140	2	32		
			68301137	113.7	140	2	32		
			68301157	115.7	140	2	32		
			68301177	117.7	140	2	32		
			68301197	119.7	140	2	32		
			68301217	121.7	140	2	32		
			68301237	123.7	140	2	32		
			68301257	125.7	140	2	32		
			68301277	127.7	140	2	32		
			68301297	129.7	140	2	32		

EM-B

Expanding mandrel
Manual or power operated

Expanding mandrels Ø 16 - 129.5 mm

- **Size 0 - 4**
- **Large expansibility**

Application/customer benefits

- For turning, milling, grinding and gear cutting operations
- High flexibility by means of modular system
- High torque transmission and concentricity
- No axial movement of clamping sleeve during operation
- Clamping of very short workpieces on the front section of the sleeve possible

Technical features

- Large expansibility up to 1.5 mm in diameter
- Hand or power operated
- Flange mounting
- Very rigid design
- Tapped holes at the front face to mount axial stops
- Clamping sleeves are also available in siliconized version

Standard equipment

Basic mandrel with draw bolt for power operation
Mounting bolts

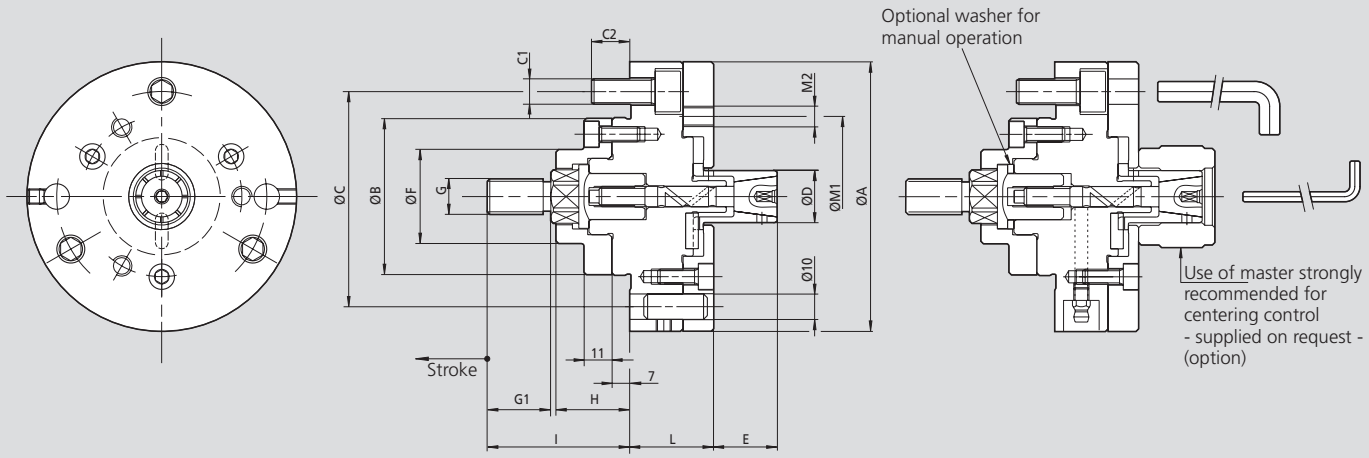

Subject to technical changes.
For more detailed information please ask our customer service.

SMW-AUTOBLOK Type		EM-B 0	EM-B 1	EM-B 2	EM-B 3	EM-B 4
A	mm	106	106	106	125	180
B g5	mm	62	62	62	62	86
C	mm	82.6	82.6	82.6	82.6	133.4
C1	mm	3 x M10	3 x M10	3 x M10	3 x M10	3 x M12
C2	mm	16	16	16	16	15
D	mm	see tables	see tables	see tables	see tables	see tables
E	mm	23	28	43	58	85
F	mm	37	37	37	37	55
G	mm	M16	M16	M16	M16	M16
G1	mm	25	25	25	25	25
H	mm	29	29	29	29	36
I	mm	56	56	56	56	62
L	mm	35	37	37	37	50
M1	mm	63	68	85	104	162
M2	mm	3 x M8	3 x M8	3 x M8	6 x M8	6 x M8
N	mm	M8	M10	M14	M14	M18
Axial stroke	mm	2.5	2.5	2.5	5	6.5
Sleeve expansion on Ø	mm	0.5	0.5	0.5	1	1.5
Clamping range Ø	mm	16-25.5	20-40.5	35-60.5	55-81	80-131
Max. axial force	kN	7	12	20	20	25
Recommended	**CSN**	**150**	**200**	**200**	**200**	**250**
actuating cylinders	**SIN-S**	**70**	**70**	**85**	**85**	**100**

SMW-AUTOBLOK 256

SMW-AUTOBLOK 259

Expanding mandrels Ø 16 - 129.5 mm

- Size 0 - 4
- Large expansibility

EM-B

Expanding mandrel
Manual or power operated

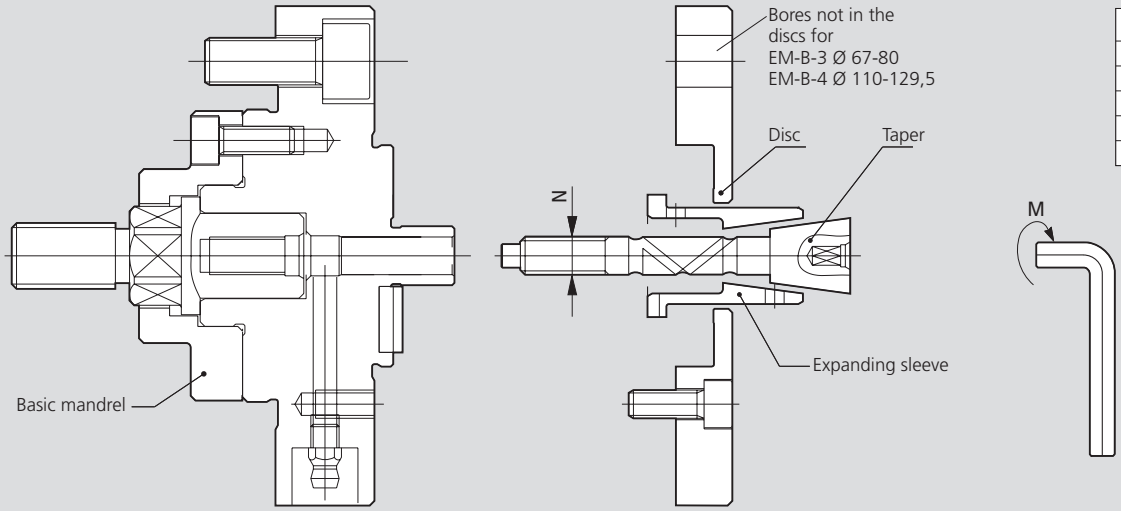

EM-B	N	M(N.m)
0	M8	23
1	M10	45
2	M14	125
3	M14	125
4	M18	250

Subject to technical changes.
For more detailed information please ask our customer service.

EM-B-0

Basic mandrel 68100021
Expanding sleeve Ø D16–Ø D25

Taper	68020120		
Disc	**68040121**	**68040221**	**68040321**
D16	68200160		
D16.5	68200165		
D17	68200170		
D17.5		68200175	
D18		68200180	
D18.5		68200185	
D19			68200190
D19.5			68200195
D20			68200200

Taper	68020220		
Disc	**68040421**	**68040521**	**68040621**
D20.5	68200205		
D21	68200210		
D21.5	68200215		
D22		68200220	
D22.5		68200225	
D23		68200230	
D23.5			68200235
D24			68200240
D24.5			68200245
D25			68200250

EM-B-1

Basic mandrel 68101021
Expanding sleeve Ø D20–Ø D40

Taper	68021120		
Disc	**68041121**	**68041221**	**68041321**
D20	68210200		
D20.5	68210205		
D21	68210210		
D21.5		68210215	
D22		68210220	
D22.5		68210225	
D23		68210230	
D23.5		68210235	
D24			68210240
D24.5			68210245
D25			68210250

Taper	68021220		
Disc	**68041421**	**68041521**	**68041621**
D25.5	68210255		
D26	68210260		
D26.5	68210265		
D27	68210270		
D27.5	68210275		
D28	68210280		
D28.5		68210285	
D29		68210290	
D29.5		68210295	
D30		68210300	
D30.5		68210305	
D31		68210310	
D31.5			68210315
D32			68210320
D32.5			68210325
D33			68210330
D33.5			68210335
D34			68210340
D34.5			68210345
D35			68210350

Taper	68021320		
Disc	**68041721**	**68041821**	
D35.5	68210355		
D36	68210360		
D36.5	68210365		
D37	68210370		
D37.5	68210375		
D38	68210380		
D38.5		68210385	
D39		68210390	
D39.5		68210395	
D40		68210400	

EM-B-2

Basic mandrel 68102021
Expanding sleeve Ø D35–Ø D60

Taper	68022120		
Disc	**68042121**	**68042221**	
D35	68220350		
D35.5	68220355		
D36	68220360		
D36.5	68220365		
D37	68220370		
D37.5		68220375	
D38		68220380	
D38.5		68220385	
D39		68220390	
D39.5		68220395	
D40		68220400	

Taper	68022220		
Disc	**68042321**	**68042421**	**68042521**
D40.5	68220405		
D41	68220410		
D41.5	68220415		
D42	68220420		
D42.5	68220425		
D43	68220430		
D43.5		68220435	
D44		68220440	
D44.5		68220445	
D45		68220450	
D45.5		68220455	
D46		68220460	
D46.5			68220465
D47			68220470
D47.5			68220475
D48			68220480
D48.5			68220485
D49			68220490
D49.5			68220495
D50			68220500

Taper	68022320		
Disc	**68042621**	**68042721**	**68042821**
D50.5	68220505		
D51	68220510		
D51.5	68220515		
D52	68220520		
D52.5	68220525		
D53	68220530		
D53.5		68220535	
D54		68220540	
D54.5		68220545	
D55		68220550	
D55.5		68220555	
D56		68220560	
D56.5			68220565
D57			68220570
D57.5			68220575
D58			68220580
D58.5			68220585
D59			68220590
D59.5			68220595
D60			68220600

EM-B-3

Basic mandrel 68103021
Expanding sleeve Ø D55–Ø D80

Taper	68023120		
Disc	**68043121**	**68043221**	
D55	68230550		
D56	68230560		
D57	68230570		
D58		68230580	
D59		68230590	
D60		68230600	

Taper	68023220		
Disc	**68043321**	**68043421**	**68043521**
D61	68230610		
D62	68230620		
D63	68230630		
D64		68230640	
D65		68230650	
D66		68230660	
D67			68230670
D68			68230680
D69			68230690
D70			68230700

Taper	68023320		
Disc	**68043621**	**68043721**	**68043821**
D71	68230710		
D72	68230720		
D73	68230730		
D74		68230740	
D75		68230750	
D76		68230760	
D77			68230770
D78			68230780
D79			68230790
D80			68230800

EM-B-4

Basic mandrel 68104021
Expanding sleeve Ø D80–Ø D129.5

Taper	68024120	
Disc	**68044121**	**68044221**
D80	68240800	
D81.5	68240815	
D83	68240830	
D84.5	68240845	
D86		68240860
D87.5		68240875
D89		68240890
D90.5		68240905

Taper	68024220	
Disc	**68044321**	**68044421**
D92	68240920	
D93.5	68240935	
D95	68240950	
D96.5	68240965	
D98		68240980
D99.5		68240995
D101		68241010
D102.5		68241025

Taper	68024320	
Disc	**68044521**	**68044621**
D104	68241040	
D105.5	68241055	
D107	68241070	
D108.5	68241085	
D110		68241100
D111.5		68241115
D113		68241130
D114.5		68241145

Taper	68024420	
Disc	**68044721**	**68044821**
D116	68241160	
D117.5	68241175	
D119	68241190	
D120.5	68241205	
D122		68241220
D123.5		68241235
D125		68241250
D126.5		68241265
D128		68241280
D129.5		68241295

Ordering example:

Component ID = Ø 30

Basic mandrel EM-B-1	Id. No. 68101021
Expanding sleeve AD = Ø 30	Id. No. 68210300
Taper	Id. No. 68021220
Disc	Id. No. 68041521

EM-S

Segment sleeve mandrel power operated

Segment sleeve mandrel Ø 18 - 105 mm

- **Size 1 - 4**
- **Large expansibility**

Application/ customer benefits

- Ideal for volume production and hard turning / grinding with wear resistant, case hardened and vulcanised clamping sleeves
- Highest accuracy and high torque transmission by means of fixed mandrel body
- Axial pull down by the axial clamping movement of the clamping sleeve = best face run out
- Clamping sleeve quick change for short setup times
- Preparation for air sensing

Technical details

- Large expansibility 0.8-1.2 mm depending on the size (The clamping sleeves have a max. radial expansibility in diameter of ± 0.4 mm or ± 0.6 mm from the nominal diameter.)
- Power operated
- Rigid design with flange mounting
- Tapped holes in the face for axial stops

Standard equipment

Base mandrel with mounting bolts

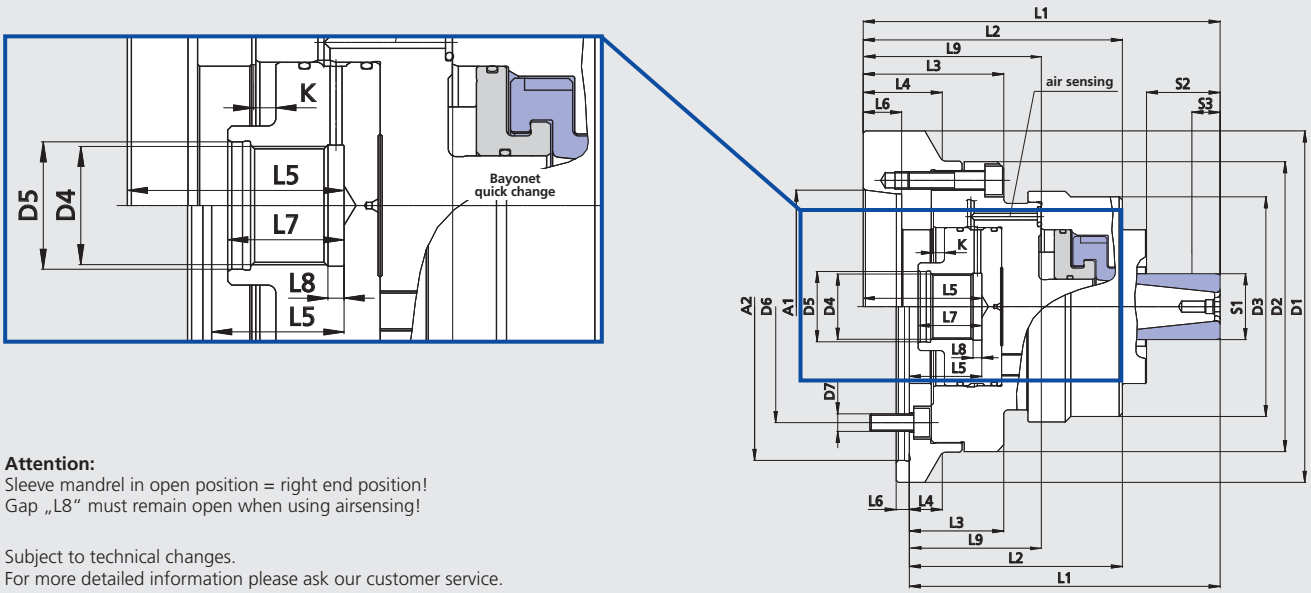

Attention:
Sleeve mandrel in open position = right end position!
Gap „L8" must remain open when using airsensing!

Subject to technical changes.
For more detailed information please ask our customer service.

SMW-AUTOBLOK Type		EM-S-1			EM-S-2			EM-S-3					EM-S-4				
Mounting		**A5**	**A6**	**Z140**	**A5**	**A6**	**Z140**	**A5**	**A6**	**A08**	**Z140**	**Z170**	**A5**	**A6**	**A8**	**Z140**	**Z170**
Id. No.		202734	202735	205082	202737	202738	205085	202740	202741	203132	205086	205134	203384	203385	203427	205088	205089
Short taper mounting DIN 55026	**A1**	A5	A6	-	A5	A6	-	A5	A6	A8	-	-	A5	A6	A8	-	-
Center mounting	**A2** H5	-	-	140	-	-	140	-	-	-	140	170	-	-	-	140	170
	D1	132	160	150	132	160	150	132	160	202	150	180	157	157	202	157	180
	D2	132	132	132	132	132	132	132	132	132	132	132	157	157	157	157	157
	D3	82	82	82	100	100	100	114	114	114	114	114	143	143	143	143	143
	D4	M30x1.5	M30x1.5	M30x1.5	M30x1.5	M30x1.5	M30x1.5	M30x1.5	M30x1.5	M30x1.5	M30x1.5	M30x1.5	M30x1.5	M30x1.5	M30x1.5	M30x1.5	M30x1.5
	D5 H7	32	32	32	32	32	32	32	32	32	32	32	32	32	32	32	32
	D6	104.8	133.4	104.8	104.8	133.4	104.8	104.8	133.4	171.4	104.8	133.4	104.8	133.4	171.4	104.8	133.4
	D7	4 x M10	4 x M12	3 x M10	4 x M10	4 x M12	3 x M10	4 x M10	4 x M12	4 x M16	3 x M10	6 x M12	4 x M10	4 x M12	4 x M16	3 x M10	6 x M12
	L1	138.5	138.5	123.5	162.5	162.5	147.5	177.5	177.5	179.5	162.5	162.5	193	191	195	193	191
	L2	113.5	113.5	98.5	118	118	103	123	123	126	108	108	132.5	130.5	134.5	132.5	130.5
	L3	61	61	46	64	64	49	75	75	77	60	60	80	78	82	80	78
	L4	-	36	15	-	36	15	-	36	47	15	30	-	-	47	-	13
	L5	53	53	38	54	54	39	50	50	52	35	35	54	52	56	54	52
	L6	16.5	17.5	6	16.5	17.5	6	16.5	17.5	20	6	6	19	17.5	20	5	5
	L7	30	30	30	29	29	29	25	25	25	25	25	29	29	29	29	29
Gap	**L8**	4	4	4	4	4	4	4	4	4	4	4	5	5	5	5	5
	L9	79	79	64	81	81	66	75	75	77	60	60	80	78	82	80	78

Technical data

Type		EM-S-1						EM-S-2			EM-S-3					EM-S-4				
Clamping range	**S1**	18-23	>23-35	18-23	>23-35	18-23	>23-35	30-55	30-55	30-55	45-80	45-80	45-80	45-80	45-80	70-105	70-105	70-105	70-105	70-105
Max. clamping length	**S2**	17.5	23	17.5	23	17.5	23	41.5	41.5	41.5	51.5	51.5	51.5	51.5	51.5	57.5	57.5	57.5	57.5	57.5
Min. clamping length	**S3**	7		7		7		8	8	8	8	8	8	8	8	8	8	8	8	8
Axial stroke	**K**	4		4		4		6	6	6	6	6	6	6	6	6	6	6	6	6
Expansibilty in dia.		0.8		0.8		0.8		1.2	1.2	1.2	1.2	1.2	1.2	1.2	1.2	1.2	1.2	1.2	1.2	1.2
Max. actuating force	kN	15		15		15		20	20	20	25	25	25	25	25	35	35	35	35	35
Max. speed	r.p.m.	5000		5000		5000		5000	5000	5000	5000	5000	5000	5000	5000	5000	5000	5000	5000	5000
Max. transmittable torque	Nm	50-90						105-190			195-350					395-595				
Rec. actuating cylinders		**SIN-S 70**						**SIN-S 85**			**SIN-S 85**					**SIN-S 85**				

Segment sleeve mandrel Ø 18 - 105 mm

- Size 1 - 4
- Large expansibility

EM-S

Segment sleeve mandrel
power operated

Technical design

1. Basic body EM-S with spindle adapter
2. Segment sleeve mandrel (case hardened + vulcanized) with bayonet quick change.
   Clamping sleeves size EM-S-1 with three segments, clamping sleeves from size EM-S-2 on with six segments for better gripping force distribution.
3. Workstop

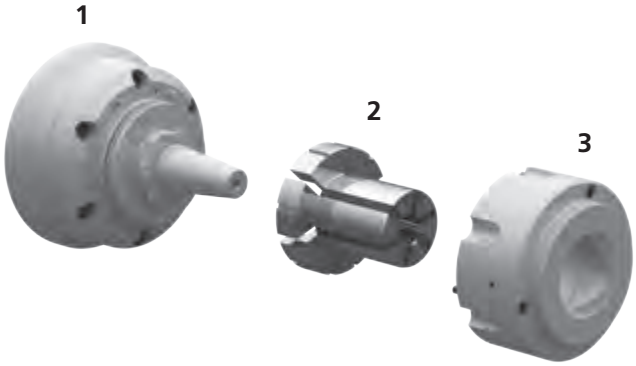

Overview clamping ranges

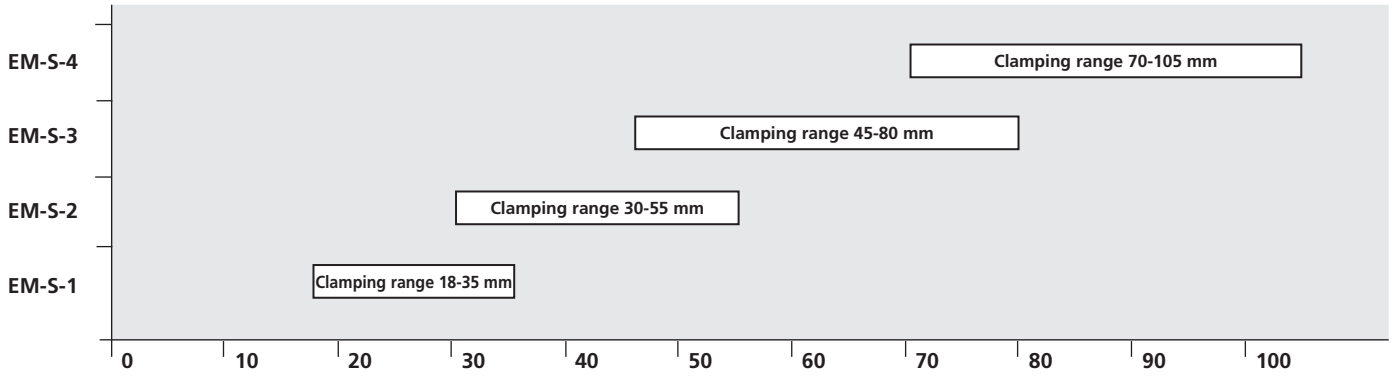

Clamping sleeves

EM-S-1*

Ø	**18**	**19**	**20**	**21**	**22**	**23**	**24**	**25**	**26**	**27**	**28**	**29**	**30**
Id. No.	204716	203026	203027	203028	203029	203030	203031	203032	203033	203034	203035	203036	203037
Ø	**31**	**32**	**33**	**34**	**35**								
Id. No.	203038	203039	203040	203041	203042								

EM-S-2**

Ø	**30**	**31**	**32**	**33**	**34**	**35**	**36**	**37**	**38**	**39**	**40**	**41**	**42**
Id. No.	206313	203044	203045	203046	203047	203048	203049	203050	203051	203052	203053	203054	203055
Ø	**43**	**44**	**45**	**46**	**47**	**48**	**49**	**50**	**51**	**52**	**53**	**54**	**55**
Id. No.	203056	203057	203058	203059	203060	203061	203062	203063	203064	203065	203066	203067	203068

EM-S-3**

Ø	**45**	**46**	**47**	**48**	**49**	**50**	**51**	**52**	**53**	**54**	**55**	**56**	**57**
Id. No.	203069	203070	203071	203072	203073	203074	203075	203076	203077	203078	203079	203080	203081
Ø	**58**	**59**	**60**	**61**	**62**	**63**	**64**	**65**	**66**	**67**	**68**	**69**	**70**
Id. No.	203082	203083	203084	203085	203086	203087	203088	203089	203090	203091	203092	203093	203094
Ø	**71**	**72**	**73**	**74**	**75**	**76**	**77**	**78**	**79**	**80**			
Id. No.	203095	203096	203097	203098	203099	203100	203101	203102	203103	203104			

EM-S-4**

Ø	**70**	**71**	**72**	**73**	**74**	**75**	**76**	**77**	**78**	**79**	**80**	**81**	**82**
Id. No.	203434	203435	203436	203437	203438	203439	203440	203441	203442	203443	203444	203445	203446
Ø	**83**	**84**	**85**	**86**	**87**	**88**	**89**	**90**	**91**	**92**	**93**	**94**	**95**
Id. No.	203447	203448	203449	203450	203451	203452	203453	203454	203455	203456	203457	203458	203459
Ø	**96**	**97**	**98**	**99**	**100**	**101**	**102**	**103**	**104**	**105**			
Id. No.	203460	203461	203462	203463	203464	203465	203466	203467	203468	203469			

* The clamping sleeves have a max. radial expansibility in diameter of ± 0.4 mm from the nominal diameter.
** The clamping sleeves have a max. radial expansibility in diameter of ± 0.6 mm from the nominal diameter.

Soft work stop blank

Type	EM-S-1	EM-S-2	EM-S-3	EM-S-4
Id. No.	203106	203107	203108	203433
A	93	105	113	142
C	47	59	75	82.5
D	80	95	88	115
E	12.5	22	27	30
F	27.5	30.5	40.5	45
H	6	6	-	-
I	50	70	88	116
K	82	100	114	143
M	19	31	46	71
N	66	82	100	128
O	M5	M5	M5	M5

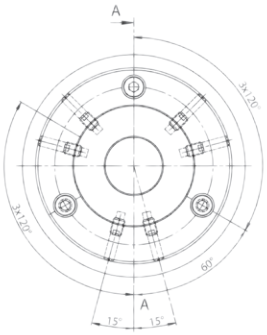

EM-S-1

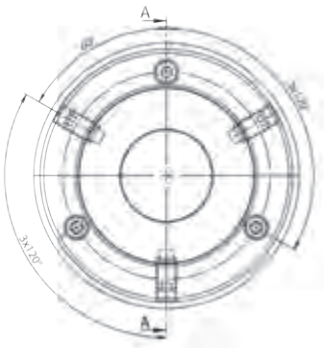

EM-S-2 / EM-S-3 / EM-S-4

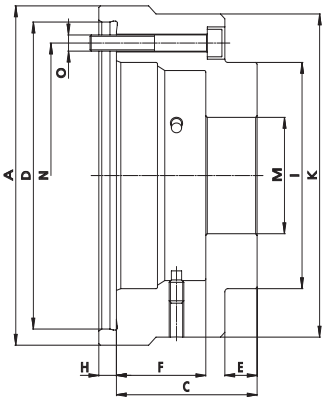

7

Adapters

ISO-A for expanding mandrels

- Mandrels EM-A and EM-B have cylindrical mounting
- Adapters for DIN 55026/ISO-A 702/1 spindle noses

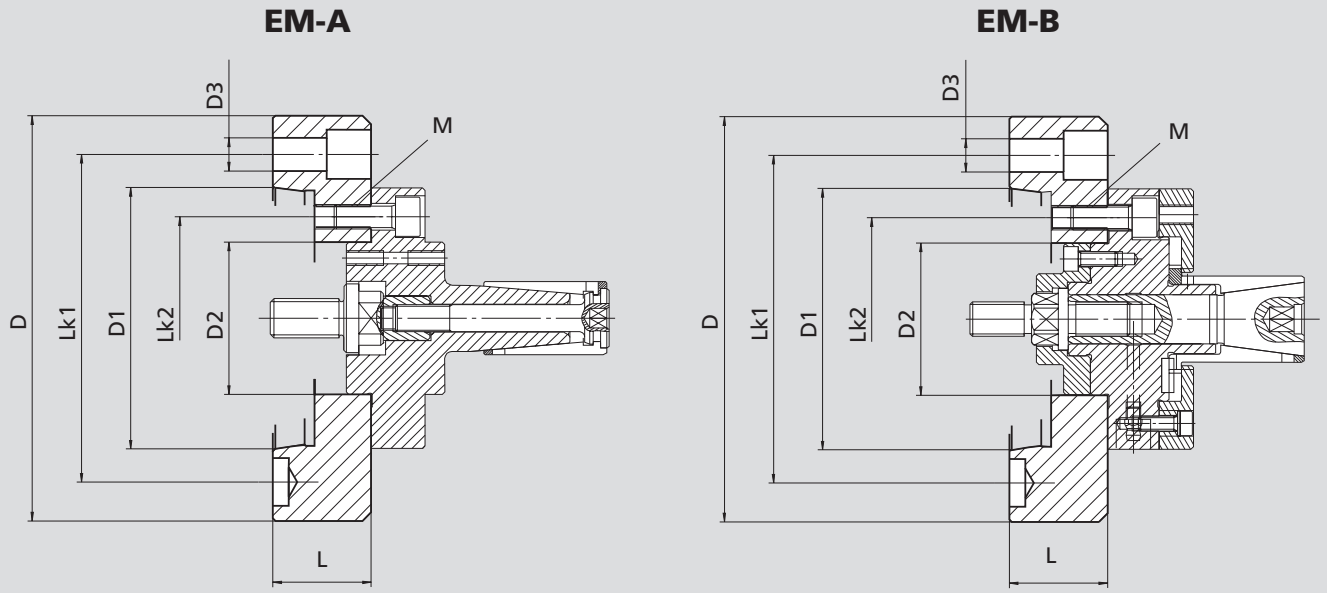

Subject to technical changes.
For more detailed information please ask our customer service.

Technical data

Adapter flange Id. No.		Spindle nose ISO	D	D1	D2	D3	LK1	LK2	L	M
24150100	mm	A5	127	82.563	62^{H6}	12	104.8	82.6	40	3 x M10
24150400	mm	A5	135	82.563	86^{H6}	12	104.8	104.8	40	3 x M10
24160100	mm	A6	165	106.375	62^{H6}	13.5	133.4	82.6	40	3 x M10
24160400	mm	A6	165	106.375	86^{H6}	13.5	133.4	104.8	40	3 x M10
24180100	mm	A8	210	139.719	62^{H6}	17	171.4	82.6	40	3 x M10
24180400	mm	A8	210	139.719	86^{H6}	17	171.4	104.8	40	3 x M10

Appropriate adapter flanges	EM-A	EM-B
24150100 ISO-A5		
24160100 ISO-A6	1 - 2 - 3 - 4 - 5 - 6	0 - 1 - 2 - 3
24180100 ISO-A8		
24150400 ISO-A5		
24160400 ISO-A6	7 - 8 - 9 - 10 - 11	4
24180400 ISO-A8		

Besides our standard range, we offer special solutions for your applications

Special mandrels

Example: Special expanding mandrel, sleeve design, on spindle and tailstock side for screw rotors

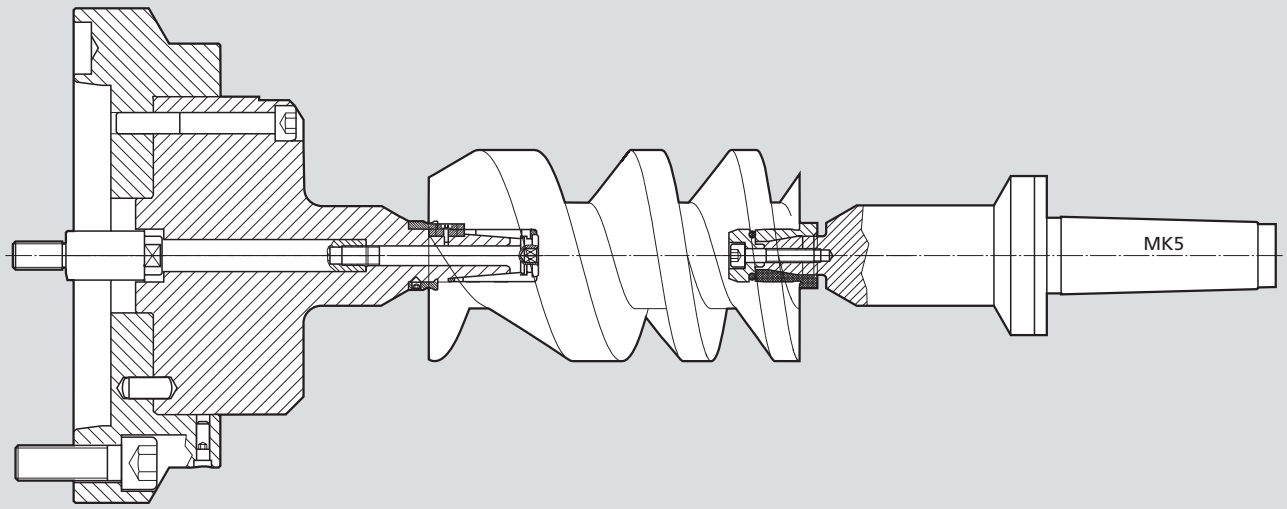

Example: Special mandrel segment design for tubes

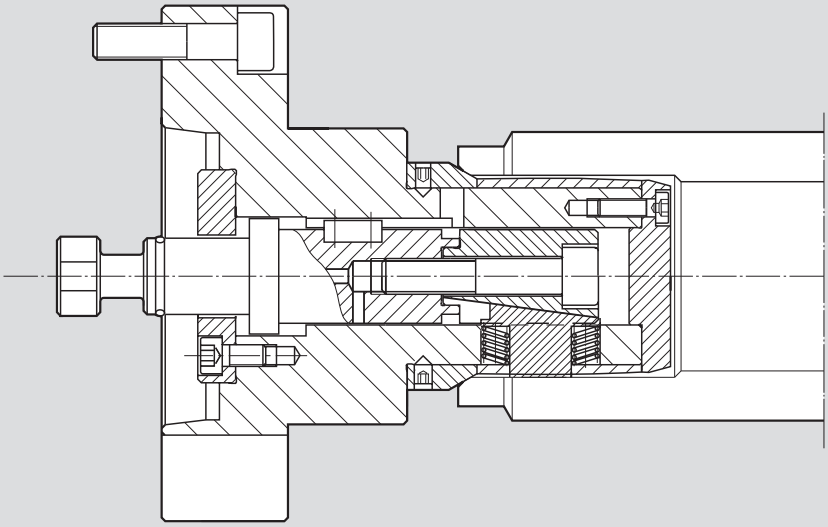

Example: Special expanding mandrel, double taper design with retractable stop, for clamping of stators

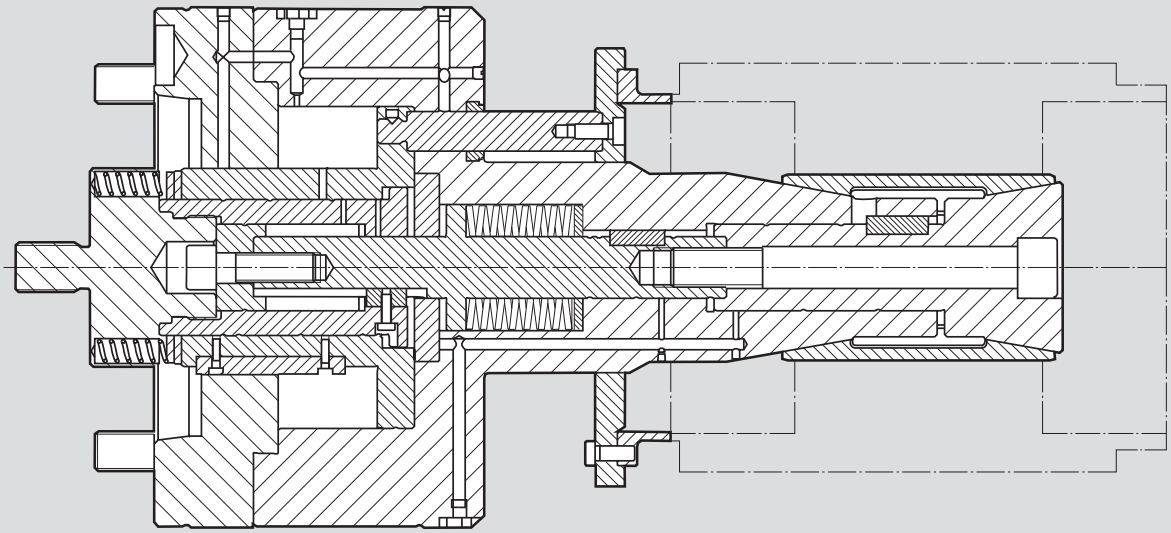

Closed center cylinders ■ Open center cylinders
Double piston cylinders

Page 260

SIN-S
Closed center rotating hydraulic cylinders

- Up to 70 bar
- Central bore for air or coolant
- Stroke control via proximity switch or LPS

Page 262

VNK-T2
Open center rotating hydraulic cylinders

- Up to 45 bar
- Through hole Ø 37.5 - 127.5 mm
- Extra short overall dimensions
- Stroke control via proximity switch or LPS

265

VSG
Open center rotating hydraulic cylinders

- Up to 30 bar
- EXTRA large through hole Ø 165 - 204 mm
- Stroke control via proximity switch

Page 266

SIN-HL
Closed center rotating hydraulic cylinders

- Up to 70 bar
- High-low gripping force clamping
- Central bore for air, coolant or oil
- Stroke control via proximity switch or LPS

Page 267

SIN-L
Closed center rotating hydraulic cylinders

- Up to 70 bar
- EXTRA long stroke
- Central bore for air, coolant or oil
- Stroke control via proximity switch or LPS

Page 268

DCN DCU DCR
Double piston rotating hydraulic cylinders

- Up to 70 bar
- Modular system for different piston strokes
- Central bore for air, coolant or oil
- Stroke control via proximity switch or LPS

Page 270

ZHVD-SZ
Double piston rotating hydraulic cylinders

- Up to 80 bar
- Central bore for air, coolant or oil
- Stroke control via proximity switch or LPS

Page 272

DCE
Double piston rotating hydraulic cylinders

- Up to 70 bar
- Central bore for air, coolant or oil
- Stroke control via proximity switch or LPS

Page 274

CSN
Closed center rotating pneumatic cylinders

- Up to 7 bar
- Stroke control
- Optional safety valve

Page 275

LPS-XS, LPS-X, LPS-NT®
Linear positioning system cylinder stroke

- Analog or digital output signal
- Monitoring of the entire cylinder stroke
- LPS-XS and LPS-XS io Link measuring range = 16 mm
- LPS-X and LPS-X io Link measuring range = 50 mm
- LPS-NT measuring range = 100 mm

Page 276

RU-1-10, RU-1-16, RU-2-22
Rotary union for media supply for rotating cylinders

- Universal for air, oil or coolant
- RU-1-10/RU-1-16 = 1 medium
- RU-2-22 = 2 media

8

SIN-S

Closed center
rotating hydraulic cylinder

Closed center rotating hydraulic cylinder

- Up to 70 bar
- Central bore for media supply
- Stroke control via proximity switch or linear positioning system

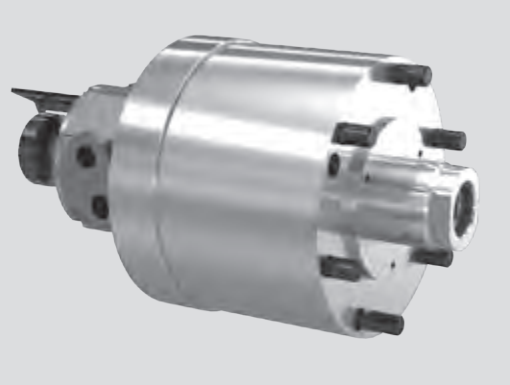

Application/customer benefits

- Actuation of power chucks/closed or partial open center mounting applications

Technical features

- Pressure range 7–70 bar
- Horizontal or vertical installation
- Central bore for coolant, oil or air with thread for rotary union
- Safety valves and excess pressure relief valve
- Mounting from the rear or from the front side
- Stroke control via proximity switch or linear positioning system
- A 10 µm filter in pressure line is requested
- Use oil HM32 ISO 3448

SIN-S standard version

- Central bore + thread for rotary union

Ordering example
SIN-S standard version

- Cylinder SIN-S 125 Id. No. 33093112
- Rotary union Id. No. 043271
  (proximity switch not included)

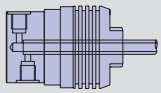

RU-2-22
Id. No. 044970

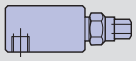

RU-1-16
Id. No. 043271

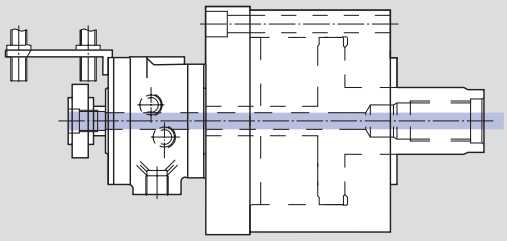

SIN-PXP with linear positioning system

- Central bore + thread for rotary union

Ordering example
SIN-S standard version

- (1)* Cylinder SIN-S 125
  prepared for PXP/LPS Id. No. 77093112
- (2)* Kit PXP (braket and taper)
  Id. No. 60557915 (sensor not included)
- Rotary union Id. No. 044970

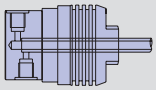

RU-2-22
Id. No. 044970

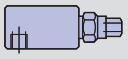

RU-1-16
Id. No. 043271

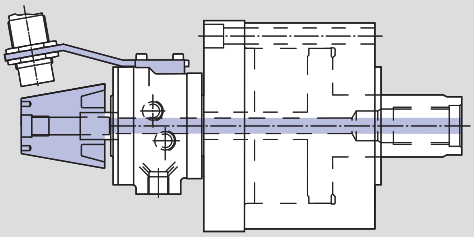

*** Attention:** PARTS (1) and PART (2) can be supplied as assembled with the single part number 33092912 (see table below "SIN-S equipped with kit PXP")

SIN-LPS-X with linear positioning system

- Central bore + thread for rotary union

Ordering example
SIN-S standard version

- Cylinder SIN-S 125
  prepared for PXP/LPS Id. No. 77093112
- Kit LPS-X (braket and cam) Id. No. 044503
  (LPS-X not included see general catalog page 275)
- Rotary union Id. No. 044970

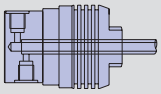

RU-2-22
Id. No. 044970

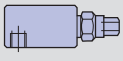

RU-1-16
Id. No. 043271

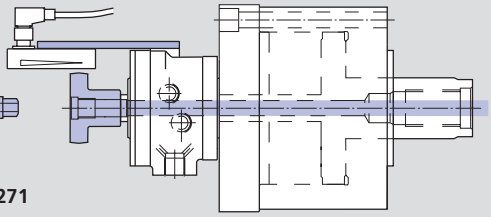

Technical data

SMW-AUTOBLOK Type		SIN-S 50	SIN-S 70	SIN-S 85	SIN-S 100	SIN-S 125	SIN-S 150	SIN-S 175	SIN-S 200	SIN-S 250
SIN-S standard version		33093105	33093107	33093109	33093110	33093112	33093115	33093117	33093120	33093125
SIN prepared for PXP/LPS		77093105	77093107	77093109	77093110	77093112	77093115	77093117	77093120	77093125
Kit PXP		60557910	60557915	60557910	60557910	60557915	60557915	60557915	60557920	60557920
Kit LPS-X		044503	044503	044503	044503	044503	044503	044503	044496	60557625
SIN-S equipped with kit PXP		33092905	33092907	33092909	33092910	33092912	33092915	33092917	33092920	33092925
Piston area	cm^2	14	28	48	66	103	157	212	280	457
Max. pressure	bar	70	70	70	70	70	70	70	70	50
Draw pull at 40 bar	kN	5.5	11	19	26	41	62	84	112	180
Oil leakage [1]	dm^3/min	1	1	1	1	1	1	1	2	2
Max. speed	r.p.m.	7000	7000	7000	7000	6000	6000	5000	4000	2000
Weight	kg	8.5	8.5	8	11	16	20	24	45	88
Moment of inertia	$kg \cdot m^2$	0.012	0.012	0.012	0.016	0.04	0.08	0.12	0.32	0.92

[1] Total at 30 bar and 50°C

Closed center rotating hydraulic cylinder

- Up to 70 bar
- Central bore for media supply
- Stroke control via proximity switch or linear positioning system

SIN-S

Closed center rotating hydraulic cylinder

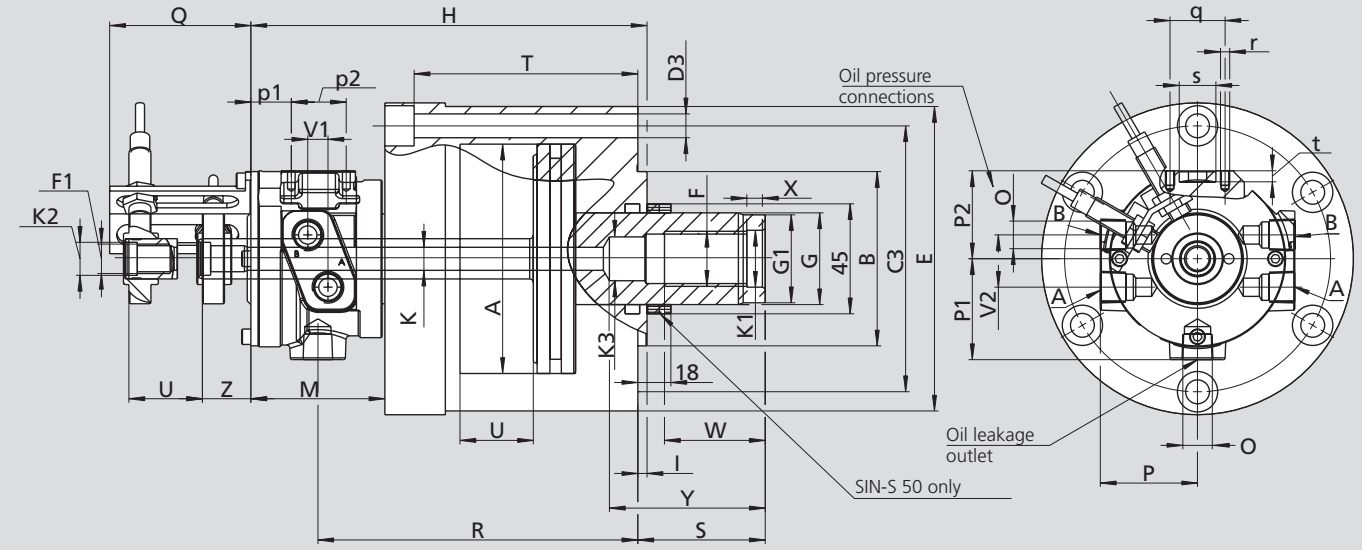

Subject to technical changes.
For more detailed information please ask our customer service.

SMW-AUTOBLOK Type			SIN-S 50	SIN-S 70	SIN-S 85	SIN-S 100	SIN-S 125	SIN-S 150	SIN-S 175	SIN-S 200	SIN-S 250
	A	mm	53	68	85	100	125	150	175	200	250
	B h6	mm	50	50	50	80	95	95	125	125	160
	C3	mm	100	100	100	120	145	170	195	225	275
	D3	mm	6 x 9	6 x 9	6 x 9	6 x 11	6 x 13	6 x 13	6 x 13	6 x 17	6 x 17
	E	mm	120	120	120	140	166	192	217	250	300
	F	mm	M20 x 1.5	M20 x 1.5	M20 x 1.5	M24	M30	M30	M36	M42 x 3	M42 x 3
Lefthand for rotary union	**F1**	mm	M16 x 1.5	M16 x 1.5	M16 x 1.5	M16 x 1.5	M16 x 1.5	M16 x 1.5	M16 x 1.5	M16 x 1.5	M16 x 1.5
	G	mm	32	32	32	40	50	50	60	65	65
	G1 h7	mm	30	30	30	38	48	48	58	62	62
	H	mm	200	200	192	196	216	216	226	288	313
	I	mm	5	5	5	5	5	5	5	5	5
	K	mm	12.5	12.5	12.5	12.5	12.5	12.5	12.5	12.5	12.5
	K1	mm	20.5	20.5	20.5	25	31	31	37	44	44
	K2 J6	mm	18	18	18	18	18	18	18	18	18
	K3 H8	mm	17	17	17	18	24	24	28	–	–
	M	mm	73	73	73	73	73	73	73	123	123
	O	inch	G 3/8″	G 3/8″	G 3/8″	G 3/8″	G 3/8″	G 3/8″	G 3/8″	G 1/2″	G 1/2″
	P	mm	55	55	55	55	55	55	55	65	65
	P1	mm	55	55	55	55	55	55	55	65	65
	P2	mm	48	48	48	48	48	48	48	59	59
	Q	mm	77	77	77	77	77	77	77	97	97
	R	mm	158.5	158.5	150.5	154.5	174.5	174.5	184.6	238	268
Max./min.	**S**	mm	55/30	55/15	47/15	47/15	70/30	70/30	70/25	80/30	85/25
	T	mm	112	112	104	104	122	122	132	140	160
Piston stroke	**U**	mm	25	40	32	32	40	40	45	50	60
	V1	mm	10	10	10	10	10	10	10	12	12
	V2	mm	30	30	30	30	30	30	30	36	36
	W	mm	40	40	40	45	55	55	55	60	60
	X	mm	10	10	10	10	10	10	10	12	12
	Y	mm	67	67	67	72	85	85	92	–	–
	Z	mm	27	27	27	27	27	27	27	27	27
	p1	mm	23.5	23.5	23.5	23.5	23.5	23.5	23.5	36	36
	p2	mm	30	30	30	30	30	30	30	30	30
	q	mm	30	30	30	30	30	30	30	30	30
	r	mm	M5	M5	M5	M5	M5	M5	M5	M5	M5
	s H8	mm	20	20	20	20	20	20	20	20	20
	t	mm	6	6	6	6	6	6	6	6	6

VNK-T2

Open center rotating hydraulic cylinder

- **Up to 45 bar**
- **Through-hole Ø 37.5 - 127.5 mm**
- **Short design/low mass**
- **Stroke control via proximity switch or linear positioning system**

Application/customer benefits

- Actuation of open center jaw and collet power chucks
- Machining of bars and tubes

Technical features

- Pressure range 8–45 bar
- Short design/low mass/low power consumption
- Horizontal installation only
- Safety valves and excess pressure relief valve
- Mounting from the rear side with bolts
- A 10 µm filter in pressure line is requested
- Use oil HM32 ISO 3448

VNK-T2

standard version

- Mounting for bar guides standard
- Bar guides not included

VNK-T2-PXP

for linear positioning system

- Mounting for bar guides standard
- Bar guides not included
- Minikit PXP must be ordered separately
- Sensor PXP Ø 30mm not included

VNK-T2-LPS-X

for linear positioning system LPS-X

- Bar guides not included
- Minikit LPS-X must be ordered separately
- Sensor LPS-X not included see page 275

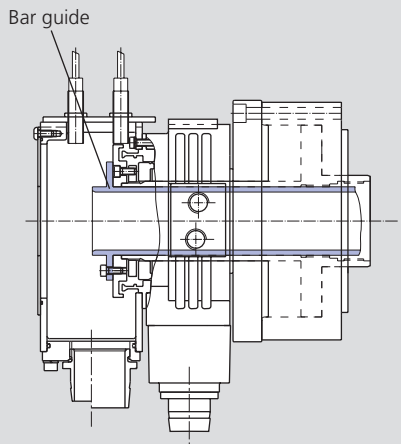

Ordering example
VNK-T2 150-67

- Cylinder Id. No. 33092216

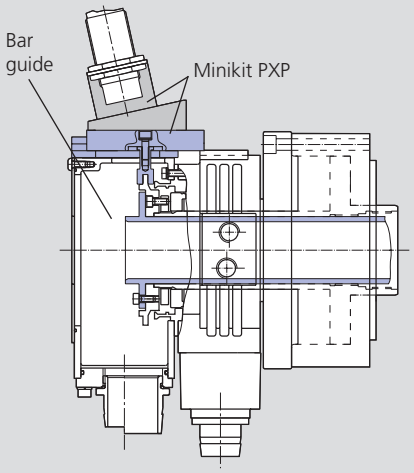

Ordering example
VNK-T2 150-67-PXP

- Cylinder Id. No. 77091916
- Minikit PXP Id. No. 60367941***

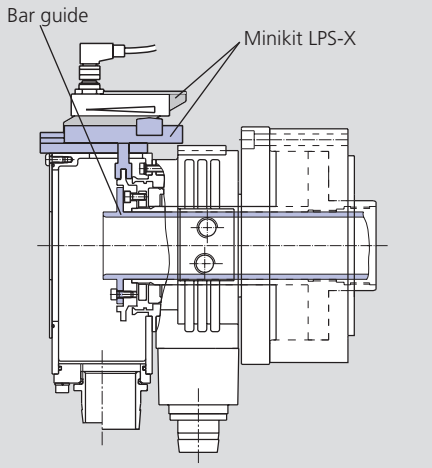

Ordering example
VNK-T2 150-67-LPS-X

- Cylinder Id. No. 77091916
- Minikit LPS-X Id. No. 60367741***

Technical data

SMW-AUTOBLOK Type VNK-T2		70-37	102-46	130-52	150-67	170-77	176-82	200-86	225-95	250-110	320-127
VNK-T2 Standard version		33092211	33092213	33092215	33092216	33092218	33092217	33092219	33092220	33092222	33092225
VNK-T2 prepared for PXP/LPS		77091911	77091913	77091915	77091916	77091918	77091917	77091919	77091920	77091922	77091925
Minikit PXP		60367941	60367941	60367941	60367941	60367941	60367941	60367941	60367941	60367941	60367941
Minikit LPS-X		60367741	60367741	60367741	60367741	60367741	60367741	60367741	60367741	60367741	60367741
Piston area	cm^2	70	103	131	152	170	176	197	226	247	325
Through-hole	mm	37.5	46.5	52.5	67.5	77	82	86	95	110	127.5
Max. pressure	bar	45	45	45	45	45	45	45	45	45	45
Draw pull at 45 bar	kN	32	47	59	68	76	79	89	102	110	144
Oil leakage*	dm^3/min	2.5	3	3.5	4	4.5	4.5	5	7	9	12
Max. speed	r.p.m.	8000	7000	6300	5500	5000	5000	4500	4000	3600	3200
Weight	kg	8	12	15	20	23	25	27	30	49	61
Moment of inertia	$kg \cdot m^2$	0.013	0.028	0.04	0.07	0.09	0.12	0.13	0.17	0.28	0.54
Power absorption**	kW	0.85	1	1.2	1.5	1.8	1.8	1.9	1.9	2.2	2.5

* Total at 30 bar / 50 °C
** At max. speed/ oil HM32 ISO 3448
*** Sensor non included in minikit

Important: On higher pressure the leakage increases proportionally. On higher oil temperature the leakage increases over proportionally (the use of an oil cooler is recommended). When designing/checking the hydraulic unit please ask for our data sheets.

- Up to 45 bar
- Through-hole Ø 37.5 - 127.5 mm
- Short design/low mass
- Stroke control via proximity switch or linear positioning system

VNK-T2

Open center rotating hydraulic cylinder

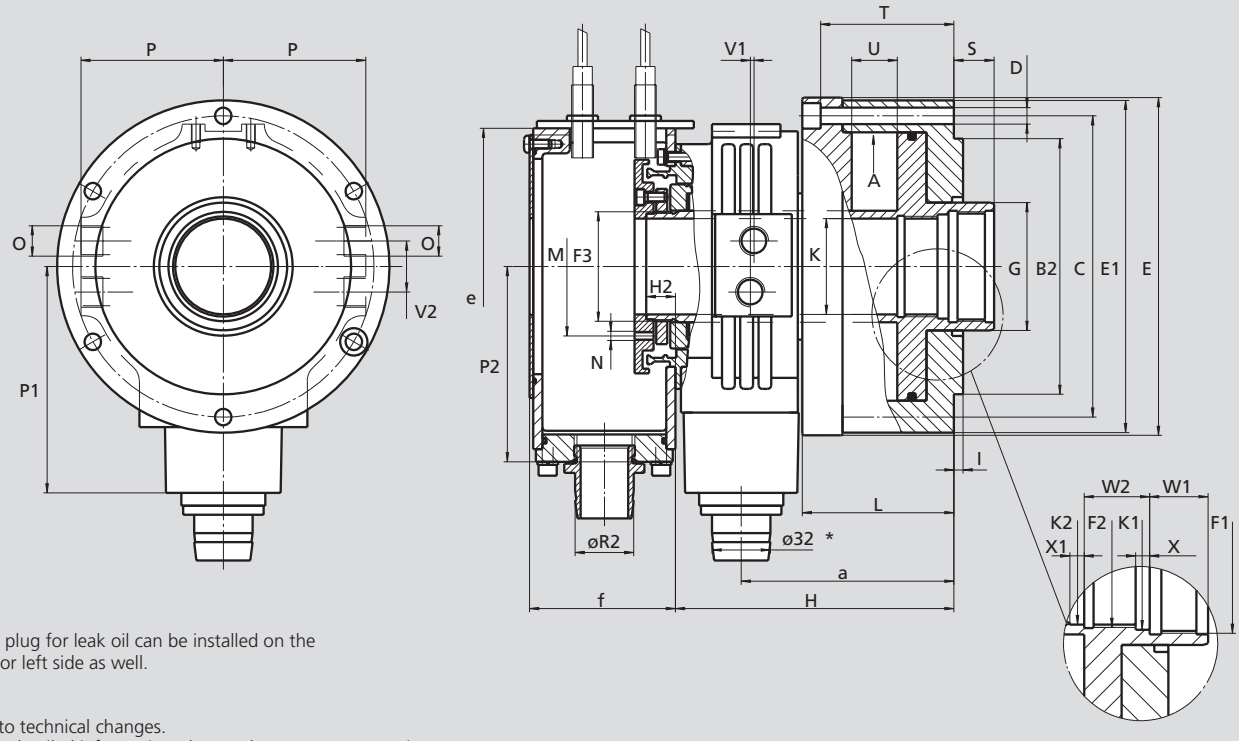

* Drain plug for leak oil can be installed on the right or left side as well.

Subject to technical changes.
For more detailed information please ask our customer service.

SMW-AUTOBLOK Type VNK-T2			70-37	102-46	130-52	150-67	170-77	176-82	200-86	225-95	250-110	320-127
	A	mm	107	130	147	163	175	180	190	205	220	250
	B2 h6	mm	110	130	140	160	160	168	180	210	210	250
	C	mm	125	147	165	180	195	205	210	227	240	270
	D	mm	6 x Ø 9	6 x Ø 9	6 x Ø 9	6 x Ø 11	6 x Ø 11	6 x Ø 11	6 x Ø 11	6 x Ø 11	6 x Ø 11	6 x ø 13
	E	mm	145	165	185	202	217	228	234	249	266	295
	E1	mm	140	162	182	197	214	222	228	245	266	290
	F1	mm	M44 x 1.5	M55 x 2.0	M60 x 1.5	M75 x 2.0	M85 x 2.0	M90 x 2.0	M95 x 2.0	M105 x 2.0	M120 x 2.0	M135 x 2.0
	F2	mm	M42 x 1.5	M50 x 1.5	M55 x 2.0	M72 x 1.5	M80 x 2.0	M85 x 2.0	M90 x 2.0	M100 x 2.0	M115 x 2.0	-
	F3	mm	M42 x 1.5	M52 x 1.5	M60 x 1.5	M74 x 1.5	M84 x 1.5	M89 x 1.5	M94 x 2.0	M104 x 2.0	M120 x 2.0	M138 x 2.0
	G	mm	50	61	70	85	95	100	105	115	130	145
	H	mm	151	152	152	178	178	182.5	203	208	245	265
	H2	mm	16	16	16	21	21	24.5	21	21	26	36.5
	I	mm	5	5	5	8	8	8	8	8	8	5
Through-hole	**K**	mm	37.5	46.5	52.5	67.5	77	82	86.5	95.5	110.5	127.5
	K1 H8	mm	42.5	52.5	57	72.5	82	87	92	102.5	117.5	132
	K2 H8	mm	40	47	52.5	69	77	82	87	97	112	-
	L	mm	83	83	83	95	95	97	107	107	116	134
	M	mm	Ø 53	Ø 68	Ø 70	Ø 91	Ø 91	Ø 101	Ø 116	Ø 120	Ø 130	-
	N	mm	M6 (2x)	M6 (2x)	M6 (2x)	M6 (4x)	M6 (2x)	M6 (2x)	M6 (2x)	M6 (2x)	M6 (2x)	-
Oil connections	**O**	inch	G 3/8"	G 3/8"	G 3/8"	G 3/8"	G 3/8"	G 3/8"	G 3/8"	G 3/8"	G 3/8"	G 3/8"
	P	mm	67	76	78	89	94	94	104	112	115	128
	P1	mm	111	122	128	138	143	143	153	165	185	198
	P2	mm	100	100	107	127	127	127	127	127	162	162
Standard	**R2***	mm	32	32	32	32	32	32	32	32	32	32
Max.	**S**	mm	24	22	22	25	25	25	31	31	31	44
	T	mm	67	73	73	83	83	85	95	95	103	119
Piston stroke	**U**	mm	26	25	25	29	29	29	34	34	35	40
	V1	mm	9	9	9	10	10	10	11	11	13	15
	V2	mm	28	28	28	36	36	36	36	36	36	36
	W1	mm	20	25	25	25	25	25	32	32	32	32
	W2	mm	22	25	28	28	28	28	30	30	30	-
	X	mm	5	6	6	6	6	6	6	6	6	6
	X1	mm	5	20	10.5	6	10	10	10	6	6	-
	a	mm	114.5	117	117	134	134	136.5	146	151	180	198
	e	mm	128	128	144	184	184	184	184	184	230	230
Standard	**f**	mm	65	65	80	90	90	90	90	90	100	100

* R_2 also Ø 40 or Ø 60 (optional)

VNK-T2

Open center
rotating hydraulic cylinder

Kits for VNK-T2 cylinders (optional)

- Kit CP3 for rotary union
- Kit adjusting workstop

Kit CP3 for VNK-T2 standard 1 medium rotary union

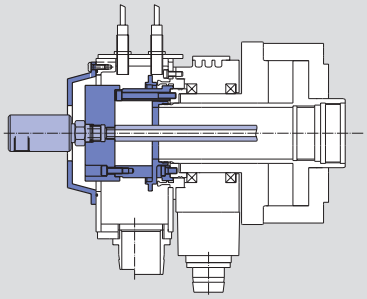

Kit CP3 for VNK-T2-PXP/VNK-T2-LPS 1 medium rotary union

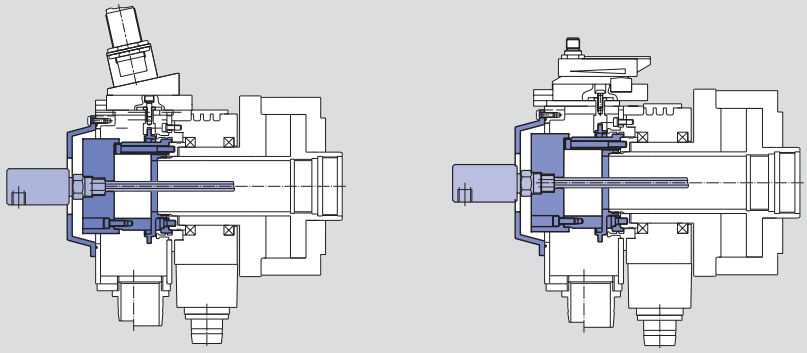

Kit CP3 for VNK-T2 standard 2 media rotary union

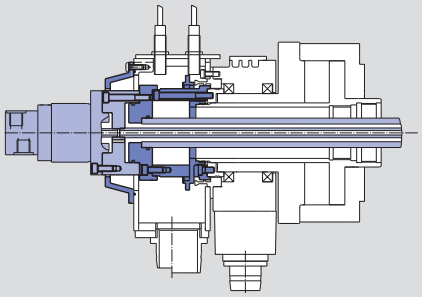

Kit CP3 for VNK-T2-PXP/VNK-T2-LPS 2 media rotary union

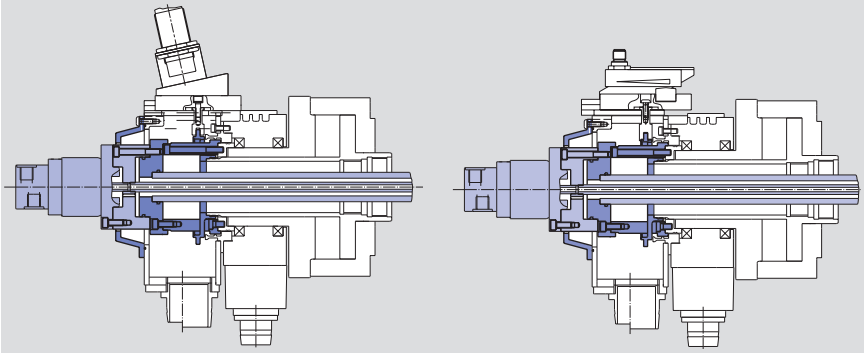

Kit adjustable workstop (only for cylinders with Kit CP3 mounted)

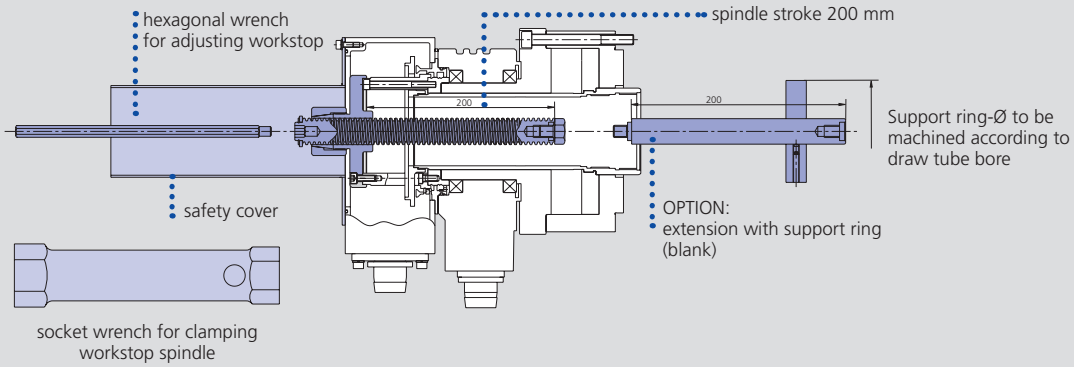

SMW-AUTOBLOK Type VNK-T2	70-37	102-46	130-52	150-67	170-77	200-86	225-95	250-110	320-127
Id. No. adjusting workstop	044540	044542	044544	044546	044548	044550	044552	044554	044556

Important:
The basis to mount the axial workstop is a VNK-T2 cylinder **with the CP-3 standard unit** mounted.
The spindle of the work stop can have a through hole for media as an option.

VSG

- Up to 30 bar
- EXTRA large through hole Ø 165 - 204 mm
- Stroke control via proximity switch

Open center rotating hydraulic cylinder

Application/customer benefits

- Actuation of EXTRA large through hole power chucks
- Clamping of very big and long components

Technical features

- Short design/low mass/low power consumption
- Pressure range 8–30 bar
- EXTRA large through hole
- Horizontal installation only
- Mounting from the front side into tapped holes
- A 10 µm filter in pressure line is requested
- Use Oil HM32 ISO 3448

Standard equipment

Open center hydraulic cylinder with
coolant collector CP1
Bracket for proximity switches
(for stroke control)
Without proximity switch and mounting bolts

Ordering example

Open center hydraulic cylinder
VSG 450-165
or
Open center hydraulic cylinder
VSG 550-205

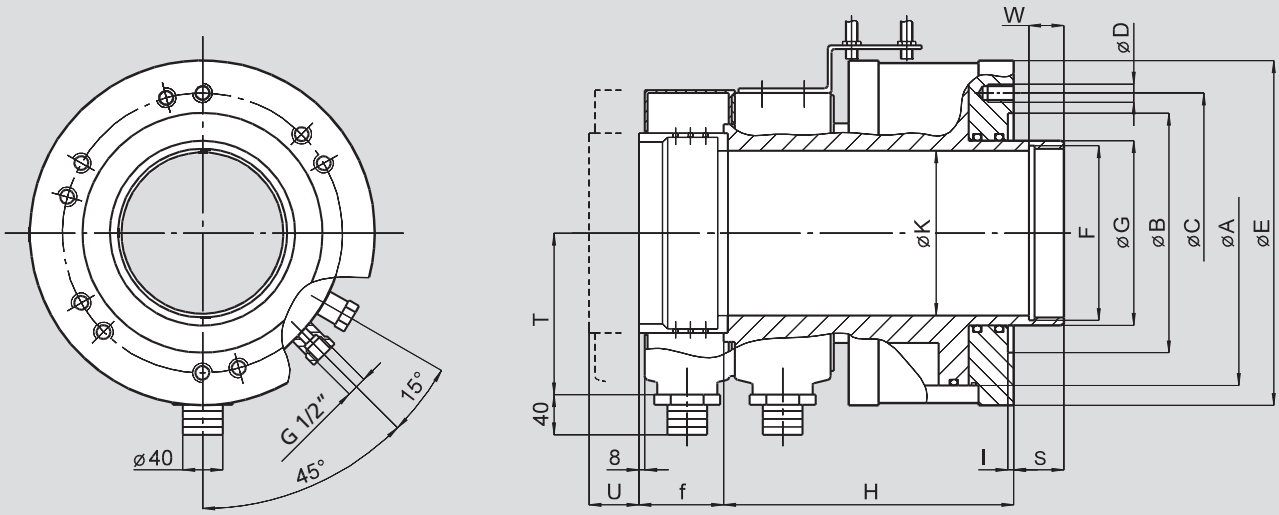

Subject to technical changes.
For more detailed information please ask our customer service.

Dimensions

SMW-AUTOBLOK Type	Id. No.	A mm	B mm	C mm	D mm	E mm	F mm	G mm	H mm	I mm	K mm	S mm	T mm	U stroke mm	W mm	f mm
VSG 450-165	**33094130**	305	240	280	6 x M16	345	M175 x 3	185	290	6	165	50	162	51	35	85
VSG 550-205	**33094135**	350	280	320	6 x M20	390	M215 x 3	228	314	6	204	50	200	51	35	85

Technical data

SMW-AUTOBLOK Type	Piston area Pull cm²	Piston area Push cm²	Max. Druck bar	Draw pull (at 25 bar) kN	Oil leakage* dm³/min.	Max. speed r.p.m.	Weight kg	Moment of inertia kg·m²
VSG 450-165	460	350	30	115	9	2000	100	1.4
VSG 550-205	550	405	30	137	10	1600	135	2.4

* Total at 30 bar / 50 °C / max. speed / oil HM32 ISO 3448

Important: On higher pressure the leakage increases proportionally. On higher oil temperature the leakage increases over proportionally (the use of an oil cooler is recommended). When designing/checking the hydraulic unit please ask for our data sheets.

SIN-HL

Closed center rotating hydraulic cylinder

- **High-low clamping**
- **Up to 70 bar**
- **Central bore for media supply**
- **Stroke control via proximity switch or linear positioning system**

Application/customer benefits

- Actuation of power chucks used for high-low clamping of thin-walled components in combination with SMW-AUTOBLOK chucks type KNCS-N, KNCS-NB, KNCS-NBX, HFKN, IEP or TS
- Closed or partial open center mounting applications

Technical features

- Symmetric piston areas for high-low clamping
- Pressure range 8-70 bar
- Horizontal or vertical installation
- Safety valves and excess pressure relief valve
- Central bore for coolant, oil or air with thread for rotary union
- Mounting from the rear side with bolts
- Stroke control via proximity switch or linear positioning system
- A 10 µm filter in pressure line is requested. Use oil HM32 ISO 3448

Standard equipment

Closed center hydraulic cylinder with stroke control and mounting bolts (without proximity switch)

Ordering example

Closed center cylinder
SIN-HL 125 Id. No. 33093812
with rotary union (optional)

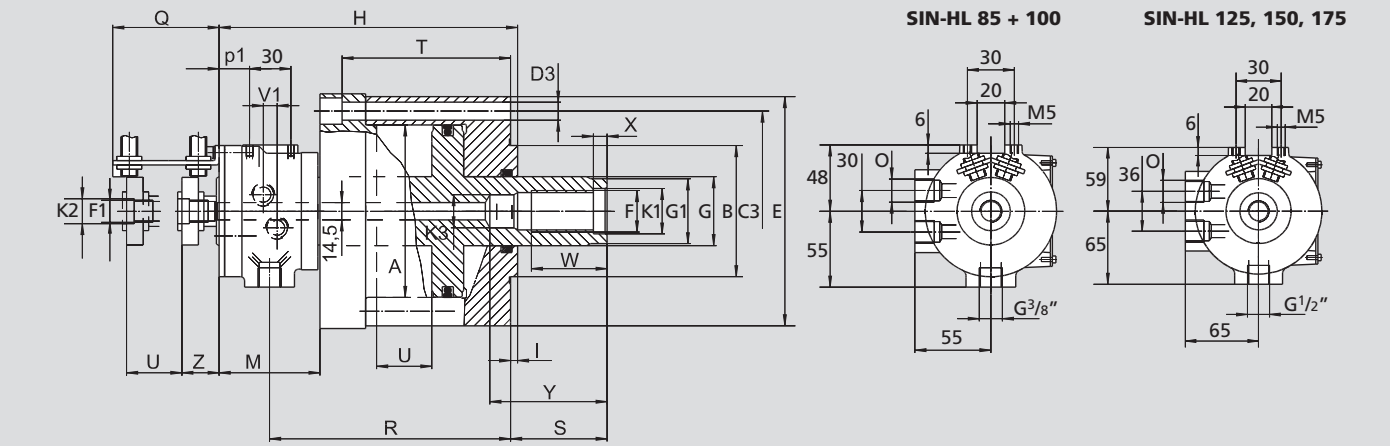

Subject to technical changes.
For more detailed information please ask our customer service.

Dimensions and technical data

SMW-AUTOBLOK Type	Id. No.	A	B h6	C3	D3 (6x60°)	E	F	F1	G	G1 g6	H	I	K1 H7	K2 J6	K3 H8	M	O	Q
		mm	mm	mm	mm	mm	mm	mm	mm	mm	mm	mm	mm	mm	mm	mm	inch	mm
SIN-HL 85	**33093809**	85	80	120	11	140	M24	M16x1.5 LH	32	30 x 10	192	5	25	18	18	75	G3/8"	77
SIN-HL 100	**33093810**	100	80	120	11	140	M24	M16x1.5 LH	32	30 x 10	192	5	25	18	18	75	G3/8"	77
SIN-HL 125	**33093812**	125	95	145	13	166	M30	M16x1.5 LH	40	38 x 12	231	5	31	18	24	93	G1/2"	97
SIN-HL 150	**33093815**	150	95	170	13	192	M36	M16x1.5 LH	50	48 x 12	237	5	37	18	28	97	G1/2"	97
SIN-HL 175	**33093817**	175	125	195	13	217	M36	M16x1.5 LH	50	48 x 12	259	5	37	18	28	97	G1/2"	97

SMW-AUTOBLOK Type	R	S	T	U	V1	W	X	Y	Z min.	p1	Piston area	Max. pressure	Draw (at 40 bar)	Oil leakage*	Max. speed	Weight	Moment of inertia
	mm	mm	mm	mm	mm	mm	mm	mm	mm	mm	cm²	bar	kN	dm³/min.	r.p.m.	kg	kg·m²
SIN-HL 85	149.5	47	95	32	10	40	10	62	27	23	49	70	19	1.5	7000	11	0.016
SIN-HL 100	149.5	47	95	32	10	45	10	62	27	23	70	70	28	1.5	7000	11	0.016
SIN-HL 125	181	70	121	40	12	55	10	75	27	37	110	70	44	1.5	6000	18	0.045
SIN-HL 150	183	70	121	40	12	55	10	75	27	41	157	70	62	1.5	6000	23	0.092
SIN-HL 175	205	72	143	52	12	55	10	75	27	41	220	70	88	1.5	5000	30	0.15

* Total at 30 bar and 50°C

„High-low" clamping for thin-walled components

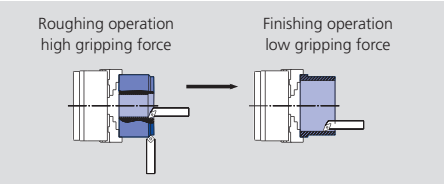

For easily deformed components SMW-AUTOBLOK offers "high-low" clamping. The gripping force of the chuck can be reduced from a large amount of gripping force used in roughing, to a smaller amount of gripping force for a finishing cut.

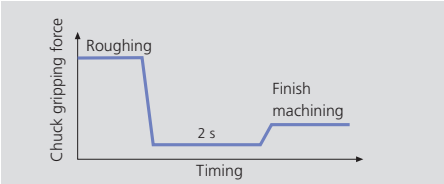

The combination between the SIN-HL cylinder and a SMW-AUTOBLOK "high-low" suitable chuck allows a monitored reduction in the gripping force. The component remains clamped in the chuck safely, however, the stress of the component can be released.

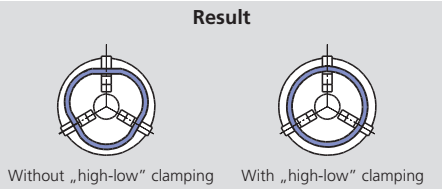

The result are round components with a minimum of deformation. The "high-low" cycle is programmable and is finished completely within 2-4 sec.
For additional information please ask our engineers.

- EXTRA long stroke
- Up to 70 bar
- Central bore for air, coolant or oil
- Stroke control via proximity switch or linear positioning system

SIN-L

Closed center rotating cylinder

Application/customer benefits

- Actuation of power chucks or clamping devices requesting a very long stroke, for example the SMW-AUTOBLOK retractable jaw chuck type W or GSA

Technical features

- Extra long stroke
- Pressure range 8-70 bar
- Horizontal or vertical installation
- Safety valves and excess pressure relief valve
- Central bore for coolant, oil or air with thread for rotary union
- Mounting from the rear side with bolts
- Stroke control via proximity switch or linear positioning system
- A 10 µm filter in pressure line is requested.
- Use oil HM32 ISO 3448

Standard equipment

Closed center cylinder with stroke control and mounting bolts
Proximity bracket (without proximity switch)

Ordering example

Closed center cylinder SIN-L 125
or closed center cylinder SIN-L 150
with rotary union (optional)

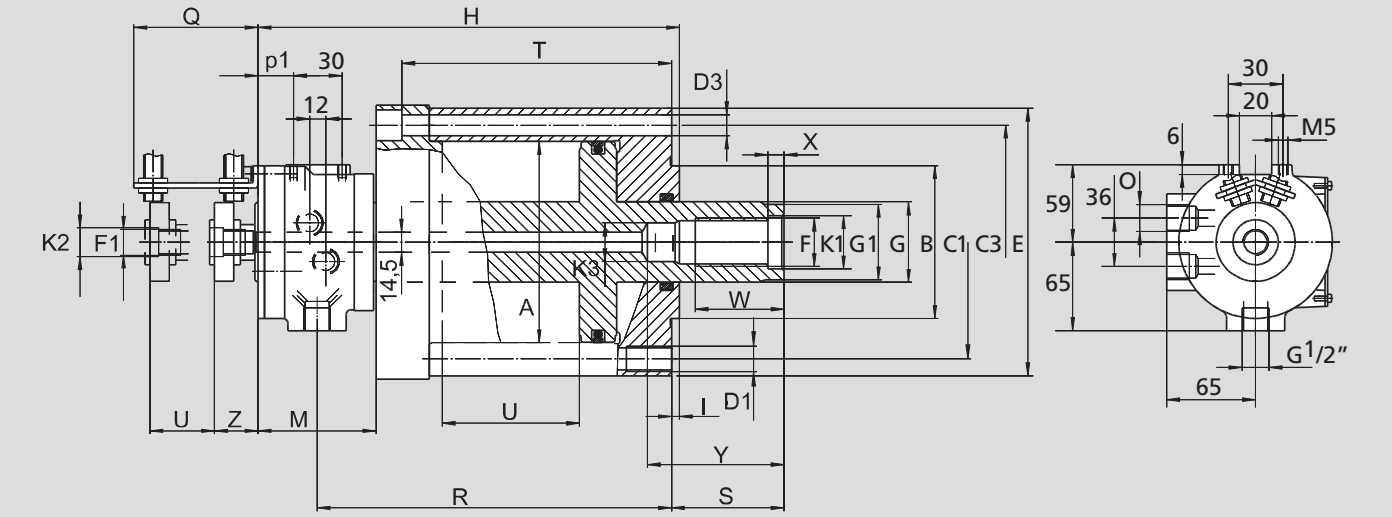

Subject to technical changes.
For more detailed information please ask our customer service.

Dimensions and technical data

SMW-AUTOBLOK Type	Id. No.	A mm	B h6 mm	C3 mm	D3 (6x60°) mm	E mm	F	F1 mm	G mm	G1 mm	H mm	I mm	K1 H7 mm	K2 j6 mm	K3 H8 mm	M mm	O inch	Q mm	R mm	S max. mm
SIN-L 100	33093910	100	80	120	11	140	M24	M16 x1.5 LH	40	38	231	5	25	18	18	73	G3/8"	107	190	85
SIN-L 125	33093912	125	95	145	13	170	M30	M16 x1.5 LH	40	38	266	5	31	18	24	93	G1/2"	133	221	100
SIN-L 150	33093915	150	95	170	13	196	M36	M16 x1.5 LH	50	48	287	5	37	18	28	97	G1/2"	133	238	120
SIN-L 175	33093917	175	125	195	13	221	M36	M16 x1.5 LH	50	48	292	5	37	18	28	97	G1/2"	133	243	115

SMW-AUTOBLOK Type	T mm	U mm	W mm	X mm	Y mm	Z min. mm	p1 mm	Piston area pull cm²	Piston area push cm²	Max. pressure bar	Pull/push (at 70 bar) kN	Oil leakage* dm³/min.	Max. speed r.p.m.	Weight kg	Moment of inertia kg·m²
SIN-L 100	139	67	45	10	72	32	22	66	74	70	46/52	2	7000	13.5	0.031
SIN-L 125	161	80	55	10	75	27	37	107	107	70	75/75	2	4500	21	0.132
SIN-L 150	176	95	55	10	75	27	41	153	153	70	107/107	2	4500	28	0.143
SIN-L 175	181	95	55	10	75	27	41	216	216	70	151/151	2	4000	37	0.173

* Total at 30 bar and 50°C

SIN-L cylinder with W or GSA retractable jaw chuck with spring loaded face driver

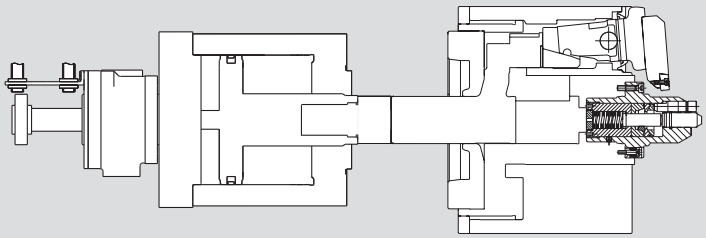

DCN/DCU/DCR

Rotating hydraulic cylinder with 2 independent pistons

- **Modular system for different piston strokes**
- **Up to 70 bar**
- **Central bore for air/coolant/oil**
- **Stroke control via proximity switch or linear positioning system**

Application/customer benefits

- Actuation of retractable jaw chuck with power operated face drivers
- Actuation of power chuck with part-ejector
- Actuation of power chucks with retractable axial stop/finger chucks with power operated centering fixture/chucks typ TPT-C with 2 piston actuation

Technical features

- Double piston cylinder with 4 way oil manifold for separate actuation of the 2 cylinders
- Pressure range 8-70 bar
- Modular system for different piston strokes: DCN, DCU and DCR
- Horizontal or vertical installation
- Stroke control on each cylinder, safety valves on the big cylinder
- Central bore for coolant, oil or air with thread for rotary union
- Mounting from the rear side with bolts
- A 10 µm filter in pressure line is requested.
- Use oil HM32 ISO 3448

Standard equipment

Double piston cylinder
Mounting screws
Stroke control on each cylinder
Proximity bracket (without proximity switch)

Ordering example

Double piston cylinder DCN 125-30
or
Double piston cylinder DCN 125-30
with rotary union (optional)

Technical data

SMW-AUTOBLOK Type		60/20		125/30				170/40	170/60	170/40
		DCN 55-38	DCR 32-38	DCN 70-25	DCN 87-40	DCU 40-40	DCR 40-80	DCN 95-50	DCU 50-48	DCR 50-95
Id. No.		**33705206**	**33705406**	**33705213**	**33705214**	**33705313**	**33705413**	**33705215**	**33705315**	**33705415**
Piston stroke	mm	55-38	32-38	70-25	87-40	40-40	40-80	95-50	50-48	50-95
Piston area A	cm^2	48	48	111	111	111	111	146	146	146
Piston area B	cm^2	60	60	125	125	125	125	168	168	168
Piston area C	cm^2	21	21	27	27	27	27	36	56	36
Piston area D	cm^2	21	21	30	30	30	30	40	60	40
A Piston force max.	kN	33.5	33.5	77	77	77	77	102	102	102
B Piston force max.	kN	42	42	87	87	87	87	118	118	118
C Piston force max.	kN	14.5	14.5	19	19	19	19	25	39	25
D Piston force max.	kN	14.5	14.5	21	21	21	21	28	42	28
Max. speed	r.p.m.	5000	5000	5000	5000	5000	5000	4000	4000	4000
Weight	kg	16.2	15.3	23.2	24	22.5	23	32	30	31
Moment of inertia	$kg \cdot m^2$	0.027	0.026	0.088	0.091	0.085	0.087	0.15	0.14	0.14
Operating pressure max.	bar	70	70	70	70	70	70	70	70	70
Operating pressure min.	bar	8	8	8	8	8	8	8	8	8
Oil leakage (*)	dm^3/min	3	3	3	3	3	3	3	3	3

* Total at 30 bar / 50 °C
** At max. speed/ oil HM32 ISO 3448

Important: On higher pressure the leakage increases proportionally. On higher oil temperature the leakage increases over proportionally (the use of an oil cooler is recommended). When designing/checking the hydraulic unit please ask for our data sheets.
Option: LPS-NT Linear stroke control. Rotary union for oil/coolant/air.

Cylinder DCN for retractable jaw chucks type W or GSA with face drivers with fixed center

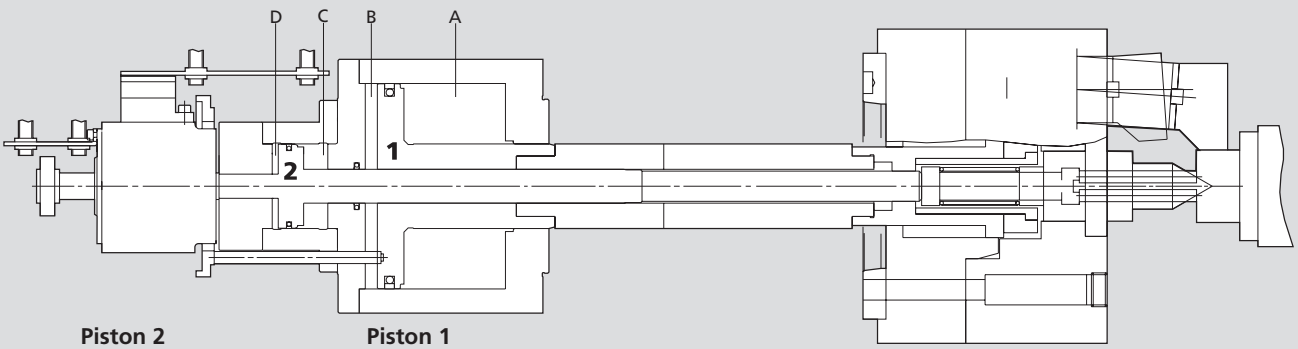

Piston 2
for actuation of the driving pins in the face driver

Piston 1
for chuck actuation

- Modular system for different piston strokes
- Up to 70 bar
- Central bore for air/coolant/oil
- Stroke control via proximity switch or linear positioning system

DCN/DCU/DCR

Rotating hydraulic cylinder with 2 independent pistons

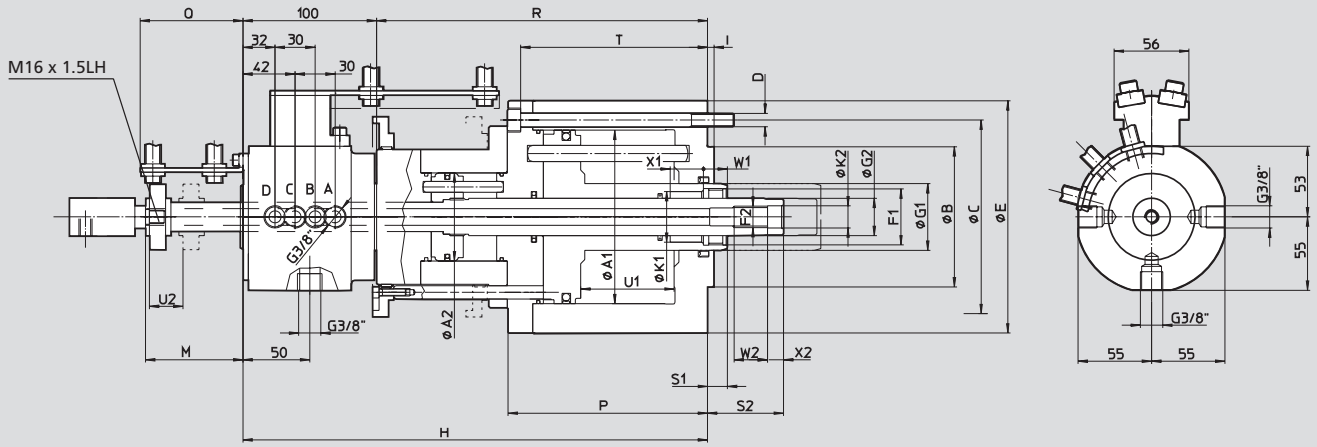

Subject to technical changes.
For more detailed information please ask our customer service.

SMW-AUTOBLOK Type			60/20		125/30				170/40	170/60	170/40
			DCN 55-38	DCR 32-38	DCN 70-25	DCN 87-40	DCU 40-40	DCR 40-80	DCN 95-50	DCU 50-48	DCR 50-95
Piston diameter 1	A_1	mm	90	90	130	130	130	130	150	150	150
Piston diameter 2	A_2	mm	56	56	66	66	66	66	75	90	75
Centering rim	B h6	mm	80	80	105	105	105	105	120	120	120
Fixing bolt circle	C	mm	106	106	145	145	145	145	175	175	175
Fixing bolts	D	mm	6 x M8	6 x M8	6 x M10	6 x M10	6 x M10	6 x M10	6 x M12	6 x M12	6 x M12
	E	mm	125	125	174	174	174	174	204	204	204
Piston rod thread 1	F_1	mm	M32 x 1.5	M32 x 1.5	M42 x 1.5	M42 x 1.5	M42 x 1.5	M42 x 1.5	M45 x 1.5	M45 x 1.5	M45 x 1.5
Piston rod thread 2	F_2	mm	M16	M16	M16	M16	M16	M16	M20	M20	M20
	G_1	mm	45	45	50	50	50	50	60	60	60
	G_2	mm	22	22	28	28	28	28	30	30	30
	H	mm	331	308	348	380	333	373	411	366	411
	I	mm	5	5	5	5	5	5	5	5	5
	K_1	mm	-	-	38	38	38	38	42	42	42
	K_2	mm	16.5	16.5	16.5	16.5	16.5	16.5	22	22	22
Max.	M	mm	67	67	73	73	73	103	73	73	118
	P	mm	198	175	150	167	120	120	184	139	139
	Q	mm	77	77	77	77	77	107	77	77	122
	R	mm	231	208	248	280	233	273	306	266	311
Min.	S_1	mm	8	8	15	15	45	45	15	60	60
Min.	S_2	mm	35	12	57	75	72	82	73	118	73
	T	mm	-	-	140	157	110	110	172	127	127
Piston stroke cyl. 1	U_1	mm	55	32	70	87	40	40	95	50	50
Piston stroke cyl. 2	U_2	mm	38	38	25	40	40	80	50	48	95
	W_1	mm	30	30	18	18	18	18	42	42	42
	W_2	mm	25	25	25	25	25	25	25	25	25
	X_1	mm	-	-	25	25	25	25	10	10	10
	X_2	mm	7	7	12	12	12	12	12	12	12

DCN

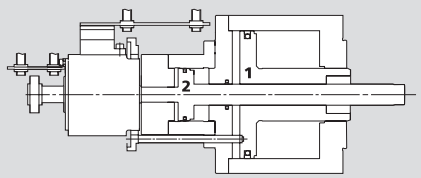

Piston 1: long stroke
Piston 2: short stroke

DCU

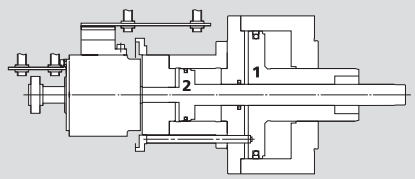

Piston 1: mid. stroke
Piston 2: mid. stroke

DCR

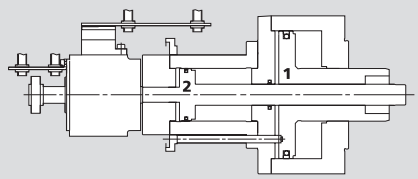

Piston 1: short stroke
Piston 2: long stroke

ZHVD-SZ

Rotating hydraulic cylinder with 2 independent pistons

- **Up to 80 bar**
- **Central bore for air/coolant/oil**
- **Stroke control via proximity switch or linear positioning system**

Application/customer benefits

- Actuation of retractable jaw chuck with power operated face drivers
- Actuation of power chuck with part-ejector
- Actuation of power chucks with retractable axial stop/finger chucks with power operated centering fixture

Technical features

- Double piston cylinder with 4 way oil manifold for separate actuation of the cylinders
- Horizontal or vertical installation
- Stroke control on each cylinder, safety valves on the big cylinder (Piston 1)
- Central bore for coolant, oil or air with thread for rotary union
- Mounting from the rear side with bolts
- A 10 µm filter in pressure line is requested. Use oil HM32 ISO 3448
- Pressure range 8-80 bar

Standard equipment

Double piston cylinder
Mounting screws
Stroke control on each cylinder
Proximity bracket (without proximity switch)

Ordering example

Double piston cylinder ZHVD-SZ 068-17
or
Double piston cylinder ZHVD-SZ 068-17 with rotary union (optional)

Technical data

SMW-AUTOBLOK Type Id. No.		ZHVD-SZ 068-17 044429	ZHVD-SZ 110-25 044577	ZHVD-SZ 240-40 045220
Piston stroke	mm	70/15	90/15	105/20
Piston area A/piston force max.	cm^2/kN	68/54	110/88	241/144
Piston area B/piston force max.	cm^2/kN	60/48	92/73	222/133
Piston area C/piston force max.	cm^2/kN	16/12	25/20	40/24
Piston area D/piston force max.	cm^2/kN	14/11	21/16	36/21.6
Speed max.	r.p.m.	5000	4000	4000
Weight	kg	26	37	68
Moment of inertia	$kg \cdot m^2$	0.065	0.125	0.42
Operating pressure max.	bar	80	80	60
Operating pressure min.	bar	8-10	8-10	8-10
Oil leakage (*)	dm^3/min	3	3	3

* Total at 30 bar / 50 °C
** At max. speed/ oil HM32 ISO 3448
Important: On higher pressure the leakage increases proportionally. On higher oil temperature the leakage increases over proportionally (the use of an oil cooler is recommended). When designing/checking the hydraulic unit please ask for our data sheets

ZHVD-SZ cylinder with retractable jaw chuck and power operated face driver

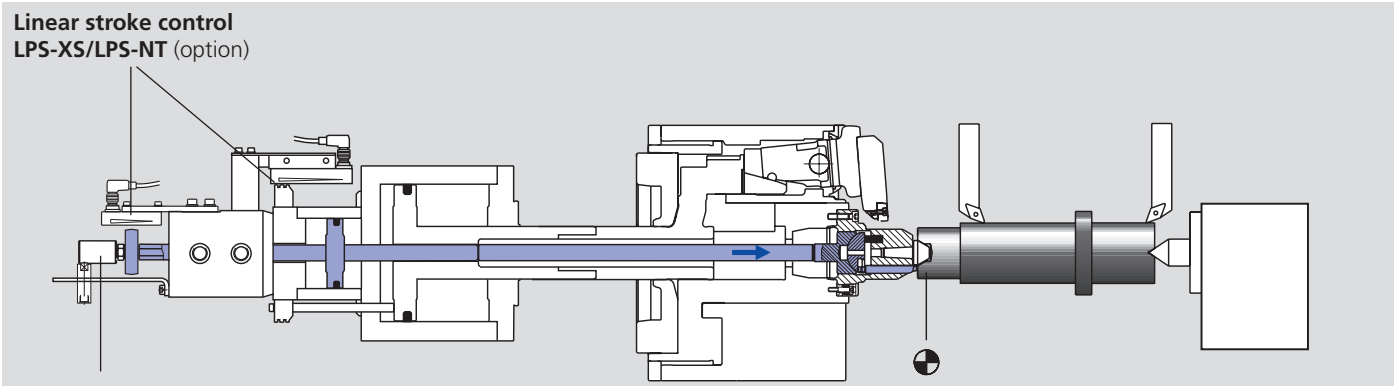

ZHVD-SZ

- Up to 80 bar
- Central bore for air/coolant/oil
- Stroke control via proximity switch or linear positioning system

Rotating hydraulic cylinder with 2 independent pistons

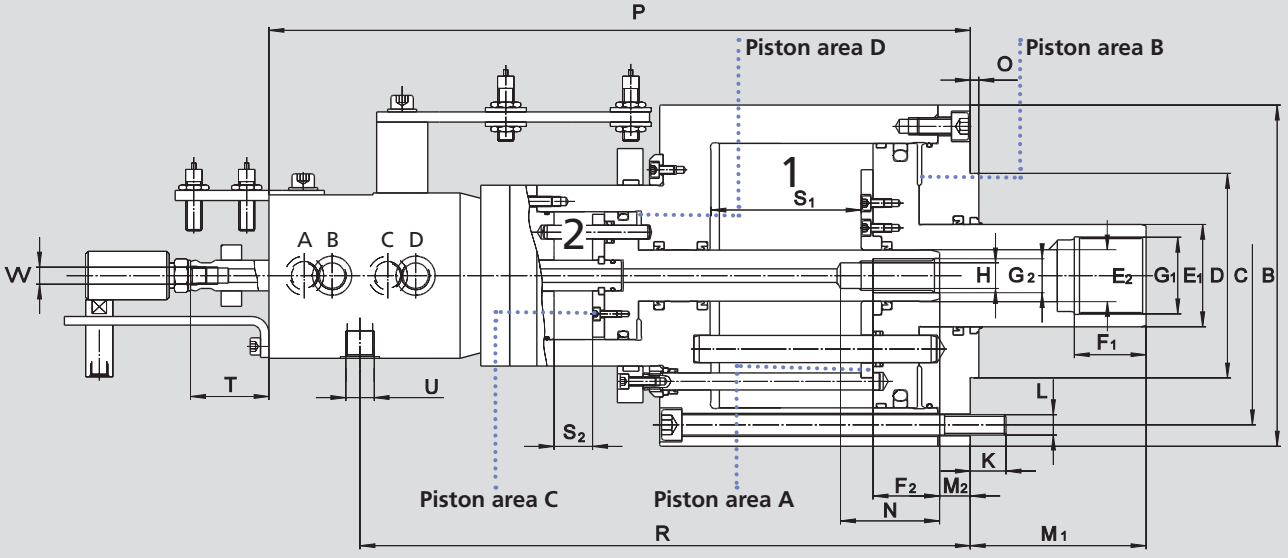

Subject to technical changes.
For more detailed information please ask our customer service.

SMW-AUTOBLOK Type Id. No.			ZHVD-SZ 068-17 044429	ZHVD-SZ 110-25 044577	ZHVD-SZ 240-40 045220
	B	mm	165	198	230
Fixing bolts circle	**C**	mm	145	175	205
Centering rim	**D** h6	mm	105	120	160
	E1	mm	45	60	60
	E2	mm	25	30	30
	F1	mm	33	42	42
	F2	mm	28	41	39
Piston rod thread 1	**G1**	mm	M36 x 1.5	M45 x 1.5	M50 x 1.5
Piston rod thread 2	**G2**	mm	M16	M20	M20
	H	mm	13.5	15	15
	K	mm	15	15	21
Fixing bolts/number	**L**	mm	M10 / 6x	M12 / 6x	M12 / 6x
Max./min.	**M1**	mm	82/12	105/15	106/1
Max./min.	**M2**	mm	33/18	33/18	67/47
	N	mm	50	58	58
	O	mm	5	5	5
	P	mm	370.5	400	442
	R	mm	305	348	389
Stroke Piston 1	**S1**	mm	70	90	105
Stroke Piston 2	**S2**	mm	15	15	20
Max./min.	**T**	mm	48/33	52/37	77/57
	U	mm	G3/8″	G3/8″	G3/8″
	W	mm	M10 x 1	M10 x 1	M10 x 1

Option: LPS-NT Linear stroke control
Rotary union for oil/coolant/air

DCE

Equal piston area and stroke
2 independent pistons

- **Double piston rotating hydraulic cylinder**
- **Up to 70 bar**
- **Central bore for air/coolant/oil**
- **Stroke control via proximity switch or linear positioning system**

Application/customer benefits

- Actuation of 2 + 2 power chucks type TPT with 2 piston actuation
- Actuation of power chuck with part ejector
- Actuation of power chucks with retractable axial stop/finger chucks with power operated centering fixture

Technical features

- Double piston cylinder with 4 way oil manifold for separate actuation of the 2 cylinders
- Pressure range 8-70 bar
- Horizontal or vertical installation
- Safety valves on the biggest cylinders and stroke control on each cylinder (piston 1)
- Central bore for air, coolant or oil with thread for rotary union
- Mounting from the rear side with bolts
- A 10 µm filter in pressure line is requested
- Use oil HM32 ISO 3448

Standard equipment

Double piston cylinder
Mounting screws
Stroke control on each cylinder
Proximity bracket (without proximity switch)

Ordering example

Double piston cylinder DCE 64-64
or
Double piston cylinder DCE 64-64
with rotary union (optional)

Technical data

SMW-AUTOBLOK Type		DCE 64-64/30-40	DCE 140-140/50-50	DCE 240-240/60-60
Id. No.		**33705212**	**33705217**	**33705221**
Piston strokes	mm	30-40	50-50	60-60
A Piston area	cm²	66	140	238
B Piston area	cm²	63	211	340
C Piston area	cm²	63	138	238
D Piston area	cm²	66	150	254
A Piston force max.	kN	46	98	119
B Piston force max.	kN	44	147	170
C Piston force max.	kN	44	97	119
D Piston force max.	kN	46	105	127
Max. speed	r.p.m.	5000	4000	3200
Weight	kg	28.6	42.5	116
Moment of inertia	kg·m²	0.074	0.18	1
Operating pressure max.	bar	70	70	50
Operating pressure min.	bar	8	8	8
Oil leakage (*)	dm³/min	3	3	3

* Total at 30 bar / 50 °C
** At max. speed/ oil HM32 ISO 3448
Important: On higher pressure the leakage increases proportionally. On higher oil temperature the leakage increases over proportionally (the use of an oil cooler is recommended).
When designing/checking the hydraulic unit please ask for our data sheets.

Cylinder DCE for 2 + 2 chucks type TPT

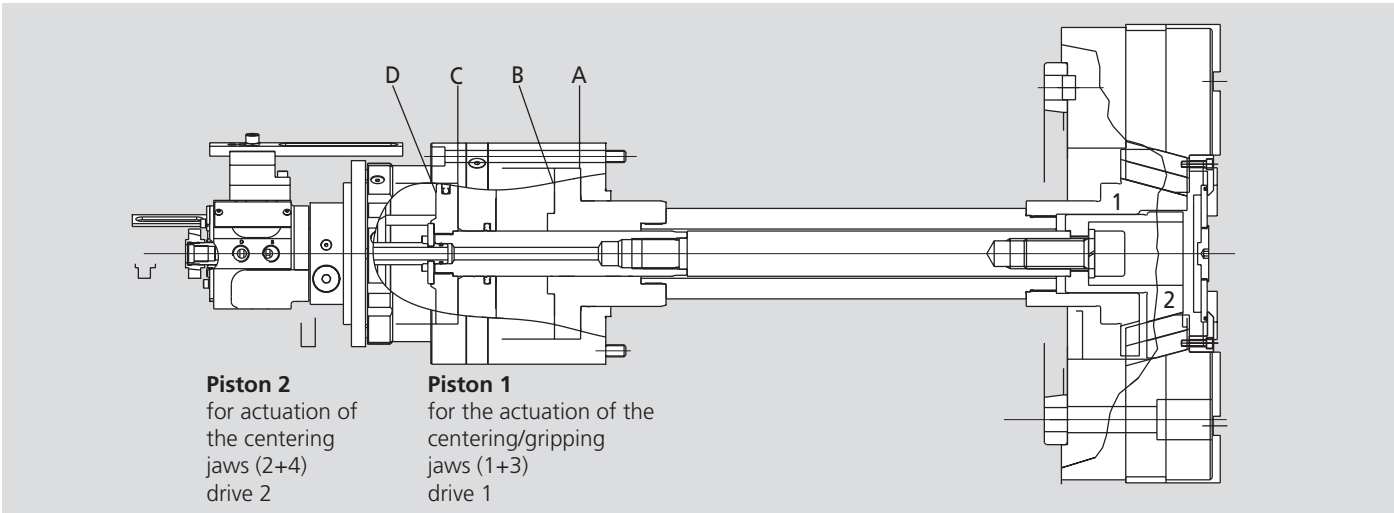

- Double piston rotating hydraulic cylinder
- Up to 70 bar
- Central bore for air/coolant/oil
- Stroke control via proximity switch or linear positioning system

DCE

Equal piston area and stroke
2 independent pistons

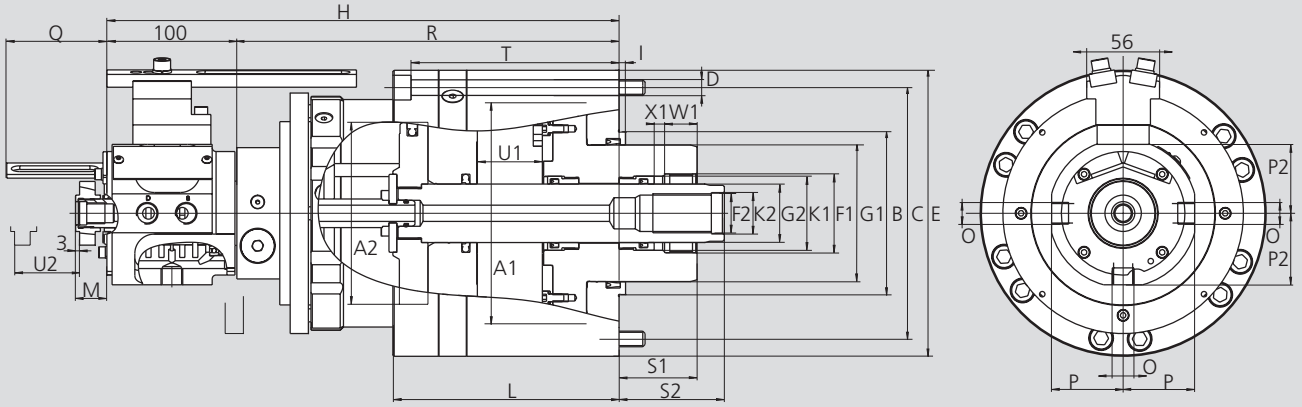

Subject to technical changes.
For more detailed information please ask our customer service.

SMW-AUTOBLOK Type			DCE 64-64/30-40	DCE 140-140/50-50	DCE 240-240/60-60
Piston diameter 1	A_1	mm	125	170	215
Piston diameter 2	A_2	mm	95	140	183
Centering rim	B h6	mm	105	125	160
Fixing bolt circle	C	mm	145	195	250
Fixing bolts	D	mm	6 x M10	6 x M12	6 x M16
	E	mm	174	220	280
Piston rod thread 1	F_1	mm	M45 x 1.5	M60 x 1.5	M75 x 2
Piston rod thread 2	F_2	mm	M20 x 1.5	M30	M36
	G_1	mm	85	105	125
	G_2	mm	30	45	55
	H	mm	362	394	451
	I	mm	5	5	5
	K_1	mm	42	57	70
	K_2	mm	20.5	31	37
	L	mm	164	174	213
Max.	M	mm	31	24	28
	O	inch	G 3/8″	G 3/8″	G 1/2″
	P	mm	55	55	62
	P_1	mm	55	55	63
	P_2	mm	53	53	63
	Q	mm	77	77	97
	R	mm	262	294	326
Min.	S_1	mm	40	60	70
Min.	S_2	mm	76	81	110
	T	mm	151	160	197
Piston stroke cyl. 1	U_1	mm	30	50	60
Piston stroke cyl. 2	U_2	mm	40	50	60
	W_1	mm	25	25	35
	W_2	mm	30	45	50
	X_1	mm	10	8	9
	X_2	mm	10	10	10

DCE cylinder with optional LPS-X linear stroke control

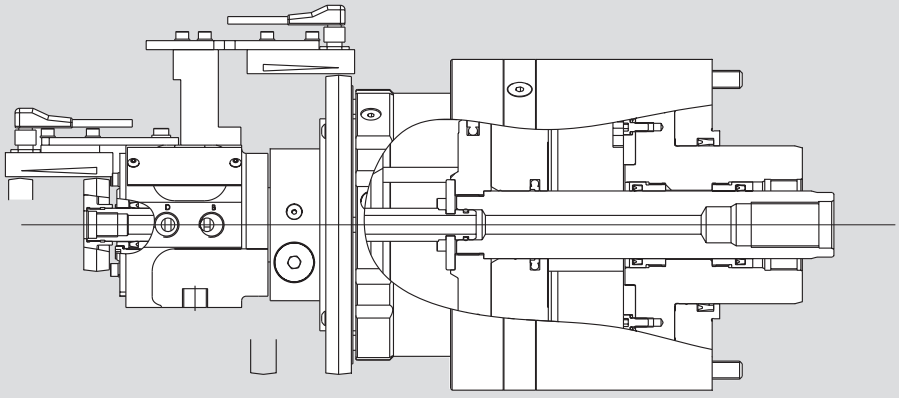

CSN

Closed center pneumatic cylinders

- **Up to 7 bar**
- **Stroke control**
- **Safety valve (optional)**

Application/customer benefits

- Actuation of power chucks and special automatic clamping equipments
- Use on machines not equipped with hydraulic power unit as traditional lathes or special CNC machines

Technical features

- Operating pressure 1-7 bar
- Horizontal or vertical installation
- Air-manifold mounted on precision bearings
- Stroke control via proximity switch
- Double safety valve (option)
- CSN 100 and CSN 150 = mounting from the rear side
- CSN 200 and CSN 250 = mounting from the front side
- An airservice unit with dryer, filter and oiler is needed

Standard equipment

Closed center pneumatic cylinder with stroke control and proximity switch support (without proximity switch)

Ordering example

Cylinder type CSN 100 Id. No. 33072110
or
Cylinder type CSN 150 Id. No. 33072115 with safety valve (optional)

Technical data

SMW-AUTOBLOK Type		CSN 100	CSN 150	CSN 200	CSN 250
Id. No.		**33072110**	**33072115**	**33072120**	**33072124**
Piston area	cm²	71	176	306	482
Max. pressure	bar	7	7	7	7
Traction at 6 bar	kN	4.3	10	18	29
Max. speed	r.p.m.	4500	4500	4500	4500
Weight	kg	5	8	11	16
Moment of inertia	kg·m²	0.01	0.03	0.06	0.18

CSN 100 - 150

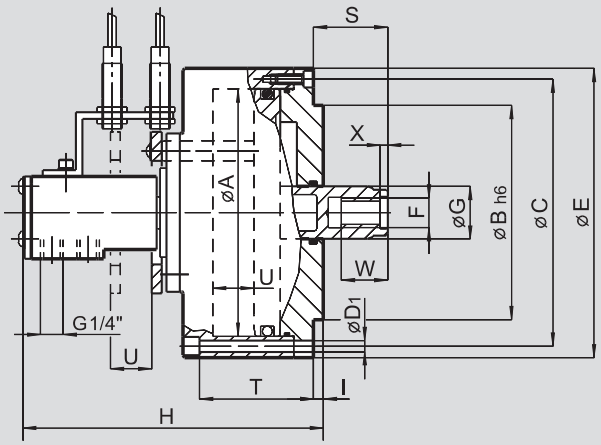

CSN 200 - 250

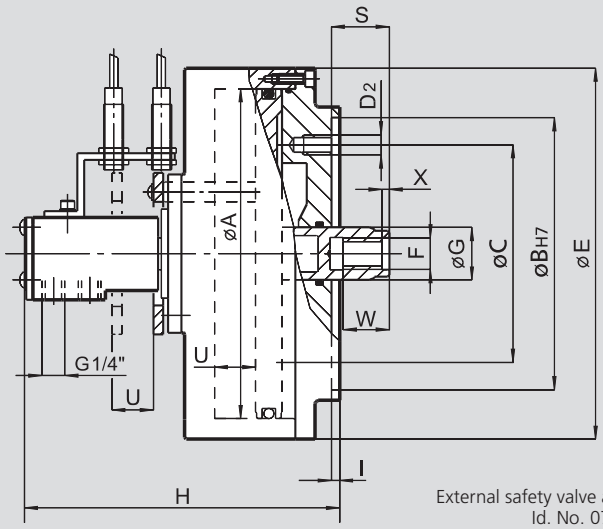

Subject to technical changes.
For more detailed information please ask our customer service.

External safety valve assembly
Id. No. 07941010

SMW-AUTOBLOK Type			CSN 100	CSN 150	CSN 200	CSN 250
Piston diameter	**A**	mm	100	150	200	250
	B	mm	80	130	165	165
Fixing bolts circle	**C**	mm	112	162	132	132
Fixing bolts diameter	**D1**	mm	6 x Ø7	6 x Ø7	-	-
Threaded fixing holes	**D2**	mm	-	-	3 x M12	6 x M12
	E	mm	125	175	225	275
	F	mm	M16	M16	M18	M18
	G	mm	30	30	32	32
	H	mm	171	171	190	190
	I	mm	5	5	5	5
Max.	**S**	mm	35	35	35	35
	T	mm	60	60	-	-
Piston stroke	**U**	mm	20	20	25	25
	W	mm	20	20	30	30
	X	mm	4	4	5	5

Linear Position Sensor for SMW-AUTOBLOK hydr. clamping cylinders	LPS-XS io Link Linear Position Sensor Measuring range 16 mm	LPS-X Linear Position Sensor Measuring range 50 mm	LPS-X io Link Linear Position Sensor Measuring range 50 mm	LPS-NT® Linear Position Sensor Measuring range 100 mm

Application/customer benefits

- Monitoring of the entire cylinder stroke/safe controlling of any clamping position
- No repositioning of prox. switches when changing chucks

Technical features

- Inductive measuring principle (no magnet!)
- No interference from magnetic fields
- Measuring range LPS-XS = 16 mm/LPS-X = 50 mm/LPS-NT = 100 mm
- Compact design/simple installation
- Analog or binary output

Additional Features LPS-X io Link

- Bidirectional data transfer
- Status monitoring
- Process data monitoring

Standard equipment

LPS without cable

Ordering example

LPS-XA 50-V with analog output 0-10 V
Id. No. 197376
Cable with straight plug 5 m
Id. No. 195897

LPS-X
mounted on cylinder SIN

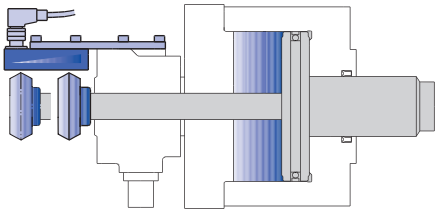

LPS-NT® 100 + LPS-XS
mounted on ZHVD-SZ cylinder with 2 independent pistons

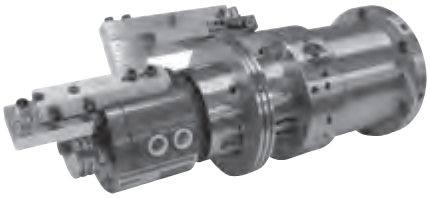

LPS-X
mounted on cylinder VNK

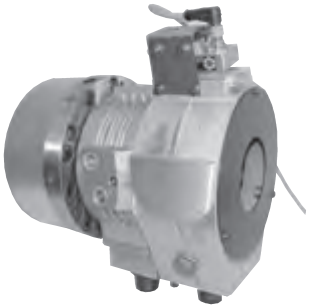

Technical data

SMW-AUTOBLOK Type	LPS-XSA 16-V	LPS-XA 50-V	LPS-NTA 100-V	LPS-XA 50-A	LPS-NTA100-A	LPS-X 50 io*	LPS-XS 16 io*
Id. No.	198825	197376	195921	199563	196381	198888	198899
Measuring range	16 mm	50 mm	100 mm	50 mm	100 mm	50 mm	16 mm
Signal	0-10 V / 4-20mA	0-10 V	0-10 V	4-20 mA	4-20 mA	io Link V1.0/V1.1	io Link V1.0/V1.1
Supply	24 V DC	24 V DC	24 V DC	24 V DC	24 V DC	24 V DC	24 V DC
Reproducibility	0.05 mm	0.1 mm	0.2 mm	0.1 mm	0.2 mm	0.1 mm	0.05 mm
Linearity	0.10 mm	0.2 mm	0.4 mm	0.2 mm	0.4 mm	0.1 mm	0.1 mm
Temperature drift	0.15 mm	0.25 mm	0.25 mm	0.25 mm	0.25 mm	0.25	0.15
Operating temperature	0 - 70°	0 - 70°	0 - 70°	0 - 70°	0 - 70°	0 - 70°	0 - 70°
Protection class	IP 67	IP 67	IP 67	IP 67	IP 67	IP 67	IP 67
Case dimensions L x W x H	40 x 20 x 16	71.5 x 40 x 16	125 x 40 x 16	71.5 x 40 x 16	125 x 40 x 16	71.5 x 40 x 16	40 x 20 x 16

Cables for LPS-XSA 16-V	Length	Id. No.
Sensor connection cable straight plug M 9 x 0.5 8-pin	5 m 10 m 15 m	198982 198983 199643
Sensor connection cable elbow plug M 9 x 0.5 8-pin	5 m 10 m 15 m	198984 198985 198940

Cables for LPS-XA 50-V, LPS-NTA 100-V, LPS-NTA 100-A, LPS-X io Link*	Length	Id. No.
Sensor connection cable straight plug M 12 x 1 5-pin	5 m 10 m 15 m	195896 195898 198907
Sensor connection cable elbow plug M 12 x 1 5-pin	5 m 10 m 15 m	195897 195899 202320

* For detailed information about io Link please ask for separate data sheet.

Binary Interface Box for LPS-X/LPS-NT	
Id. No.	198067
Supply	24 V DC ±10%/120 mA
Signal	binary, 10 bits, pnp open collector
Resolution	0.05 mm = 1 Digit for 50 mm 0.1 mm = 1 Digit for 100 mm
Case dimensions L x W x H	125 x 80 x 58 mm
Protection class	IP 64
Operating temperature	0 – 70 °C
Connections	16-pin Zylin R, style A, code N
Weight	650 g

RU-1-10
RU-1-16

Rotary union for 1 medium

- For closed and open center cylinders
- Media: air, oil or coolant

Application/customer benefits

- Rotary union for media supply for rotating cylinders

Technical features

RU-1-10: Medium: oil/coolant (**can not** rotate dry) through-hole approx. Ø 3 mm
RU-1-16: Medium: air/oil/coolant (**can** rotate dry, non-pressurised)
through-hole approx. Ø 4.5 mm
Max. flow rate 30 l/min.

Note: The medium must be free of contamination.
Filter 25 µm requested

Standard equipment

RU-1-10 Id. No. 014604
RU-1-16 Id. No. 043271

RU-1-10

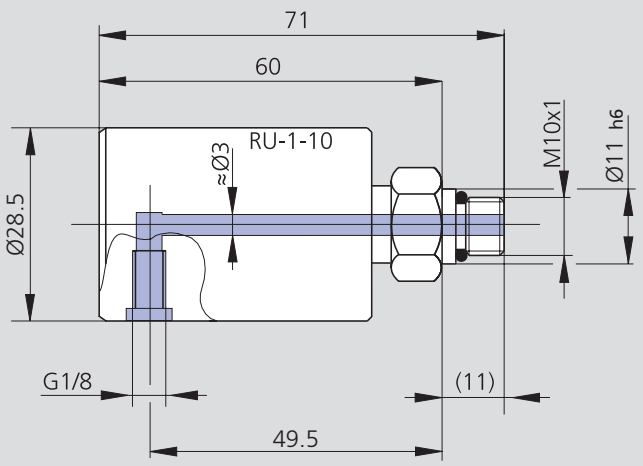

Subject to technical changes.
For more detailed information please ask our customer service.

RU-1-16

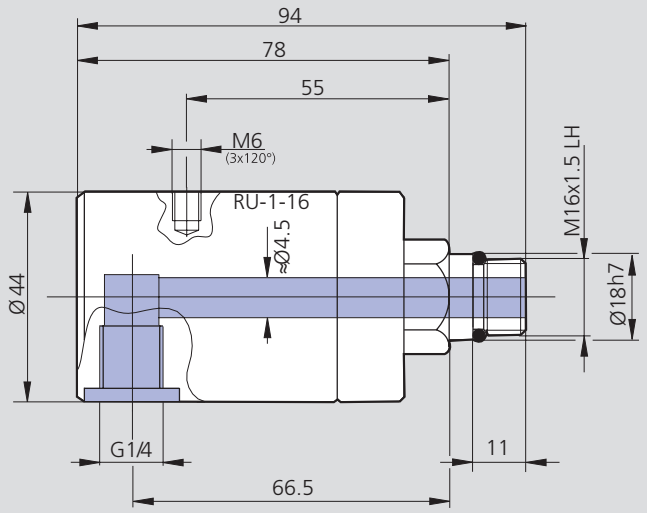

Subject to technical changes.
For more detailed information please ask our customer service.

Technical data

SMW-AUTOBLOK Type	Id. No.	max. speed r.p.m.	max. pressure bar	Weight kg	Filter requested µm
RU-1-10	014604	7500	15	0.15	25
RU-1-16	043271	7000	30	0.40	25

Rotary union for 2 media

RU-2-22

- For closed or open center cylinders (not for ZHVD-DFR)
- Media: air + oil/air + coolant

Application/customer benefits

- Rotary union for media supply for rotating cylinders
  Universal for air + oil/air + coolant
- Can also rotate dry (non-pressurised)

Technical features

- Rotary union for 2 media
- Port A for air, oil and coolant, Port B for air

Note: The medium must be free of contamination
Filter 25 µm requested

Standard equipment

Rotary union RU-2-22
Anti rotation pin-blok
Adapter for tube Ø 12 mm (ID =10mm)

Option:

Adapter for tube Ø 10 mm (ID = 8 mm) Id. No. 043703
Adapter for tube Ø 8 mm (ID = 6 mm) Id. No. 043681

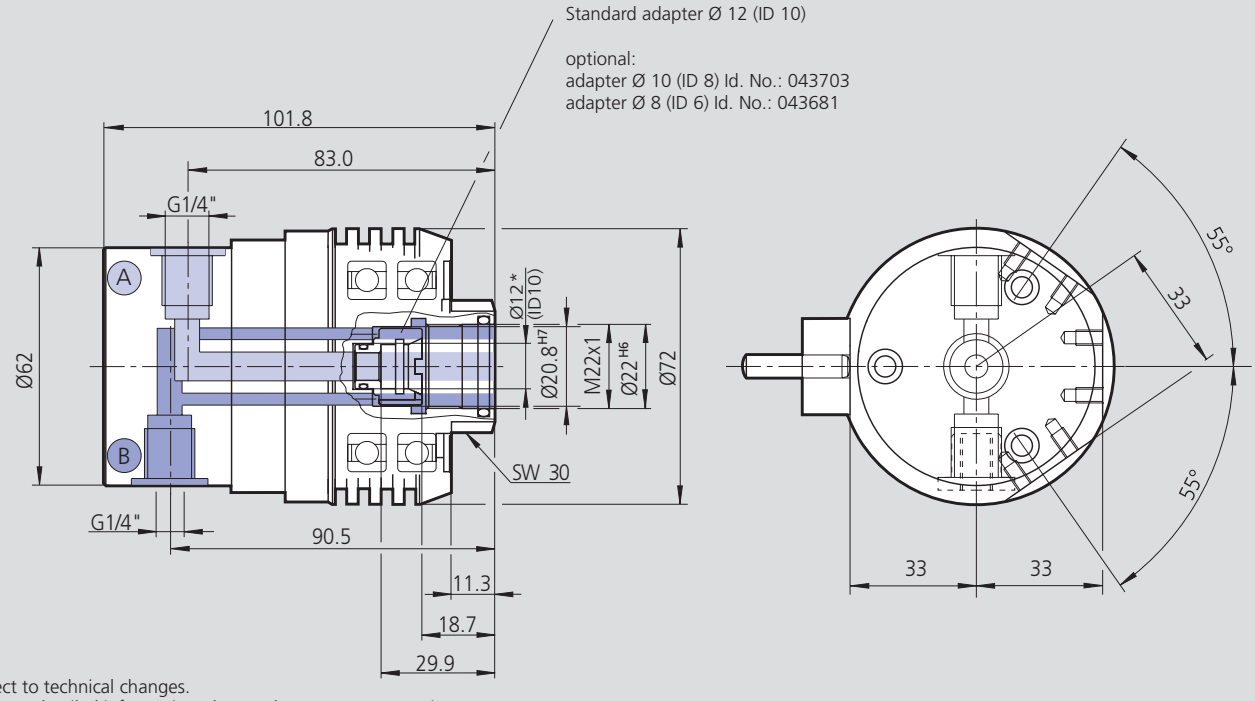

Subject to technical changes.
For more detailed information please ask our customer service.

Technical data

SMW-AUTOBLOK Type	Id. No.	max. speed	max. pressure port A media: air, oil, coolant		max. pressure port B media: air only		Weight	Filter requested
		r.p.m.	bar	psi	bar	psi	kg	µm
RU-2-22	044970	4000	40	580	10	145	0.94	25
		4500	35	507.5	10	145		
		5000	30	435	10	145		
		5500	25	362.5	10	145		
		6500	20	290	10	145		

Pneumatic/hydraulic front-end chucks
Control units

Page 280

SP® + SP-ES + SP-L

INCH
SERRATION

Front-end pneumatic power chucks
EXTRA large through hole Ø 26 - 115 mm

- 3 jaws, chuck size 125-350
- **SP-ES:** chuck with rapid and clamping stroke
- **SP-L:** chuck with long jaw stroke

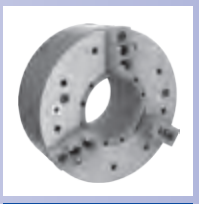

Page 284

BIG BORE® BB-N

INCH
SERRATION

Front-end pneumatic power chucks
EXTRA large through hole Ø 140 - 410 mm

- Standard jaw stroke
- 3 jaws, chuck size 400 - 800

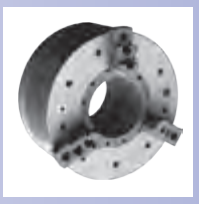

Page 288

BIG BORE® BB-N ES

INCH
SERRATION

Front-end pneumatic power chucks
EXTRA large through hole Ø 140 - 560 mm

- With rapid and clamping stroke
- 3 jaws, chuck size 400 - 1000

Page 292

BIG BORE® BB-SC

INCH
SERRATION

Front-end spring clamp power chucks
Air opening
EXTRA large through hole Ø 275 - 565 mm

- With rapid and clamping stroke
- 3 jaws, chuck size 600 - 1020
- **proofline® chucks** = fully sealed – low maintenance

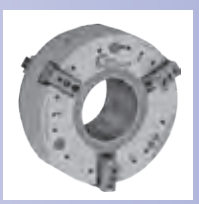

Page 296

BIG BORE® BB-N-EXL2G

INCH
SERRATION

Front-end pneumatic power chucks
EXTRA large through hole Ø 191 - 390 mm

- EXTRA large rapid and clamping stroke
- 3 jaws, chuck size 510 - 900
- Sealed master jaws

Page 300

BIG BORE® BB-AZ2G

INCH
SERRATION

Front-end pneumatic power chucks
EXTRA large through hole Ø 275 - 560 mm

- EXTRA large rapid and clamping stroke
- Self centering or compensating clamping
- 3 jaws, chuck size 685 - 1000

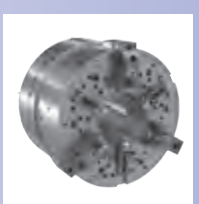

Page 302

BIG BORE® BB-FZA2G

INCH
SERRATION

Front-end pneumatic sequence chucks
EXTRA large through hole Ø 275 - 390 mm

- EXTRA large jaw stroke
- 3 integrated centering jaws and 3 compensating jaws
- Chuck size 740 - 920

Page 304

BIG BORE® BB-EXL-SC2G

INCH
SERRATION

Front-end spring clamp power chucks
EXTRA large through hole Ø 191 - 390 mm

- EXTRA large rapid and clamping stroke
- Clamping with spring
- 3 jaws, chuck size 510 - 900
- **proofline® chucks** = fully sealed – low maintenance

Page 306

CC

INCH
SERRATION

Stationary centering and dampening chuck
Ø 240 - 470 mm

- Integrated dampener
- 3 jaws

Page 308

AC-BB

1/2" Design
3/4" Design

Electronic safety control unit
for pneumatic chucks

- Basic version

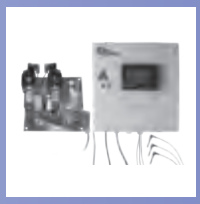

Page 310

AC-XN

1/2" Design
3/4" Design

Electronic safety control unit
for pneumatic chucks

- All safety features included
- For all commen voltages

Page 312

SF-RZ

2 Position hydraulic ring indexing chuck
Ø 400 mm

- 3 self centering jaws
- Large evacuation windows for easy chip flow
- Fully automatic and controlled indexing
- **proofline® chucks** = fully sealed – low maintenance

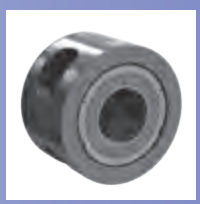

Page 314

SF-RAZ

TONGUE & GROOVE

2 Position hydraulic ring indexing chuck
Ø 750 - 1050 mm

- 6 jaws
  (3 self centering and 3 compensating jaws)
- Large evacuation windows for easy chip flow
- Fully automatic and controlled indexing

Page 316

SF-RAZ2G

TONGUE & GROOVE

2 Position hydraulic ring indexing chuck
Ø 710 - 1100 mm

- 6 jaws
  (3 self centering and 3 compensating jaws)
- Very compact design
- Fully automatic and controlled indexing
- Hydraulic actuation

Page 318

HYND-S

INCH
SERRATION

Power chucks with built-in hydraulic cylinder
Ø 180 - 400 mm

- Hydraulic oil supplied through the machine
- 3 or 4 jaws

Page 319

HYDL-S

LONG STROKE
INCH SERRATION

Power chucks with built-in hydraulic cylinder
Ø 500 - 800 mm

- Hydraulic oil supplied through the machine spindle wall
- 3 jaws

SP®+ SP-ES + SP-L

INCH
SERRATION

Front-end pneumatic power chucks Ø 26 - 115 mm

- EXTRA large through hole
- 3 jaws, chuck size 125 - 350
- SP-ES: chuck with rapid and clamping stroke
- SP-L: chuck with long jaw stroke

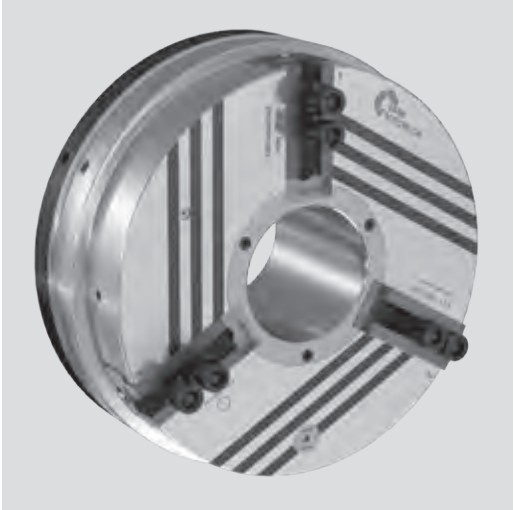

Application/customer benefits

- Universally used in turning machines, rotary tables, handling equipment, welding etc.
- For machines without hydraulic cylinder
- Easy exchange for manual chucks

Technical features

- Power chuck with built-in pneumatic cylinder. Force transmission via wedge hook
- Mounting of the distributor ring on the headstock or with the centering ring on the chuck with anti-rotation bracket
- Open and close only at stopped spindle. Air transmission via distributor ring and SMW-profile seals (monitoring by SMW control cabinet)
- Easy installation with no additional adapters required

Standard equipment

3-jaw chuck
1 set T-nuts with bolts
1 set soft top jaws
2 elbow unions G1/4"
(G1/8" on SP 125)
Spacer ring and centering ring, without distributor ring bracket/anti-rotation bracket

Ordering example

3-jaw chuck SP 160/Z155

Accessories

Control units
(see general catalog pages 308-311)

The principle invented by SMW: Air supply via distributor ring and SMW-profile seal rings

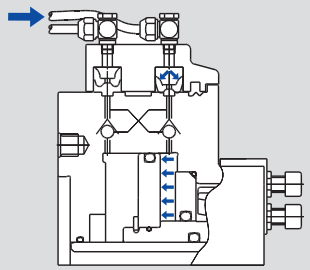

Fig. 1
Open/close movement (only possible at stopped spindle).
The profile seals deform radially under the pneumatic pressure, sealing on the chuck body and filling the cylinder chamber.
When the clamping pressure is reached, the air feed is stopped, closing the twin non-return valve.

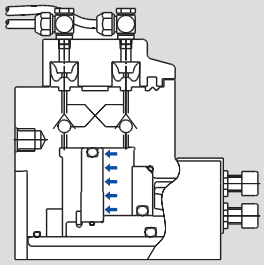

Fig. 2
The SMW-profile seals lift to the expanded position, not touching the chuck body anymore.
The clamping pressure is maintained by the twin non-return valve.
The chuck can start to rotate.

Two ways of mounting the distributor ring:

- Spacer ring and distributor ring bracket
- Centering ring and anti rotation bracket

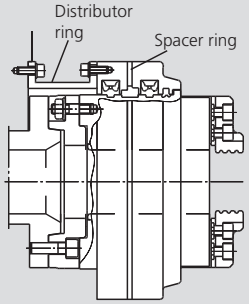

Fig. 3
Distributor ring bracket fixed (stationary) on the headstock to support the distributor ring mounted with the spacer ring.
No contact between the static distribution ring and the rotating chuck.

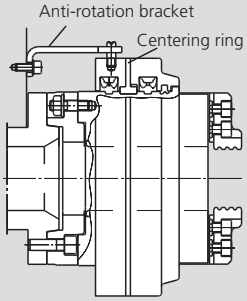

Fig. 4
Distributor ring mounted on the outer diameter of the chuck with the centering ring (teflon part subject to wear).
Need of an anti-rotation bracket fixed to the machine headstock.

Technical data

SMW-AUTOBLOK Type		SP 125-26	SP 160-38	SP 240-78	SP 280-92	SP 350-115	SP 350-115 ES	SP-L 350-90
Id. No.		012044	012045	053170	052778	012588	052850	053193
Stroke per jaw	mm (inch)	3 (0.12")	4.2 (0.17")	4.2 (0.17")	5 (0.20")	5 (0.20")	10+5* (0.39"+0.20")	24 (0.94")
Operating pressure min./max.	bar (psi)	2/10 (29/145)	2/10 (29/145)	2/10 (29/145)	2/10 (29/145)	2/10 (29/145)	2/10 (29/145)	2/10 (29/145)
Piston area max.	cm²	129	206	290	535	486	486	486
Gripping force at 6 bar (87 psi)	kN (lbf)	20 (4496)	35 (7868)	60 (13489)	95 (21357)	88 (19783)	88 (19783)	31 (6969)
Max. speed (distribution ring with centering ring)	r.p.m.	4000	3500	2800	2200	2200	2200	1000
Max. speed (distribution ring fixed stationary)	r.p.m.	4200	4200	3500	3200	3000	3000	1000
Air consumption/jaw stroke at 6 bar	liter	1.4	3.4	5.2	10.0	9.4	13.5	13.5
Weight (without jaws)	kg (lbs)	11 (24)	23 (51)	40 (88)	62 ()	78 (137)	91 (201)	97 (214)
Moment of inertia	kg·m²	0.028	0.125	0.412	0.823	1.125	1.62	1.62

* 10 mm (0.39") extended stroke (must not be used for clamping) + 5mm (0.20") clamping stroke

SMW-AUTOBLOK 283

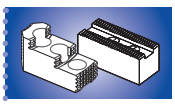

SMW-AUTOBLOK 282

Front-end pneumatic power chucks Ø 26 - 115 mm

- EXTRA large through hole
- 3 jaws, chuck size 125 - 350
- SP-ES: chuck with rapid and clamping stroke
- SP-L: chuck with long jaw stroke

SP®+ SP-ES + SP-L

INCH
SERRATION

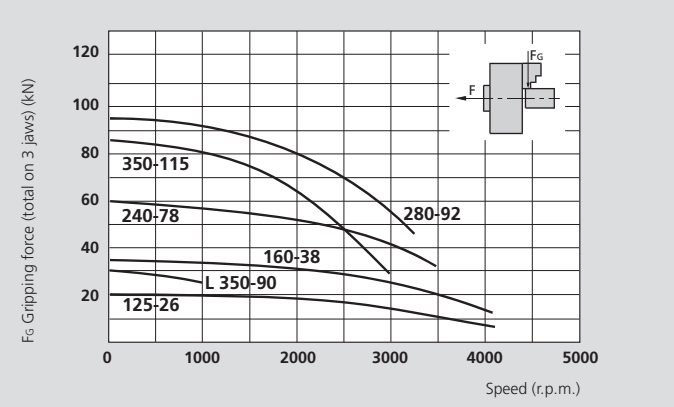

Actual gripping force diagram

The data in the diagram refer to 3-jaw-chucks, newly maintained according to their service manuals, using SMW-AUTOBLOK K05 grease, operated at 6 bar (87 psi).
The speeds refer to a static bracket. The static and dynamic gripping forces have been measured using MHB hard top jaws placed in a position, not exceeding the outer diameter of the chuck.

⚠ **Safety advice/danger of damage:**
When using taller/heavier jaws and/or clamping on a bigger diameter reduce draw pull/rotating speed accordingly.

* All hoses must be min. Ø 9 mm I.D.

Jaw position: Open for external clamping

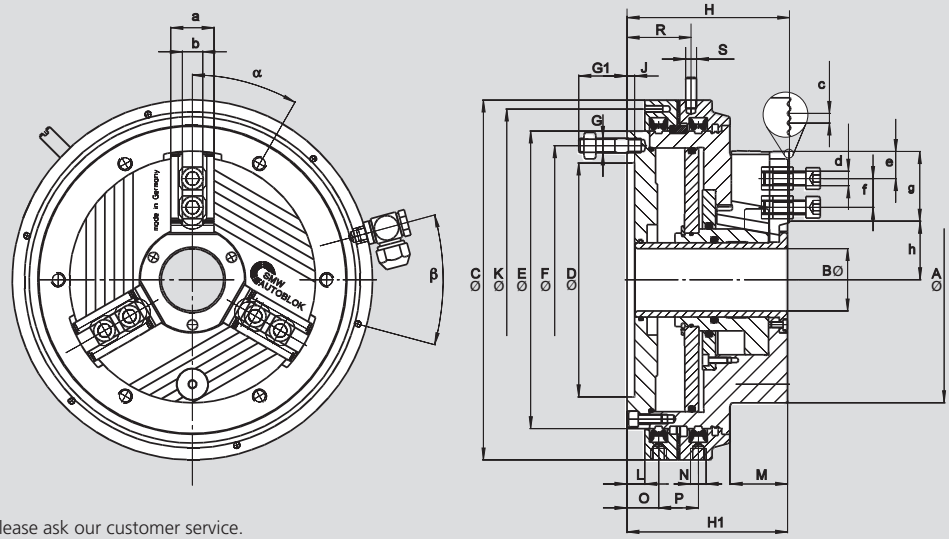

Subject to technical changes.
For more detailed information please ask our customer service.

SMW-AUTOBLOK Type			SP 125-26	SP 160-38	SP 240-78	SP 280-92	SP 350-115	SP 350-115 ES	SP-L 350-90
Mounting			Z120	Z155	Z195	Z235	Z235	Z235	Z235
	A	mm	136	171	240	284	350	360	360
	B	mm	26	38	78	92	115	115	90
	C	mm	204	255	300	372	372	372/380	372/380
	D H6	mm	120	155	195	235	235	235	235
	E	mm	160	205	248	315	315	315	315
Fixing bolts circle (6 x 60°)	F	mm	137	180	223.8	290.5	290.5	290.5	290.5
Stud screw with nut	G	mm	M8	M12	M12	M12	M12	M12	M12
	G1	mm	30	40	40	39	39	39	39
	H	mm	103	131	135.5	157.5	157.5	191.5	191.5
	H1	mm	101.5	129.5	134	156	156	190	190
	J	mm	6.5	6.5	6.5	6.5	6.5	6.5	6.5
Fixing bolts circle 6 x 60°/M6	K	mm	190	242	285	358	358	358	358
	L	mm	10	14.5	15	21	21	21	21
	M	mm	35	46	48	58	62	92	92
Pneumatic connection	N	inch	G 1/8"	G 1/4"	G 1/4"	G 1/4"	G 1/4"	G 1/4"	G 1/4"
	O	mm	19	26	26.5	33	33	33	33
	P	mm	29	33	33	33	33	33	33
	R	mm	43	52	52	60	60	60	60
Anti-rotation pin	S	mm	8	12	12	12	12	12	12
	a	mm	24	30	36	44	44	44	44
	b	mm	12	14	17	21	21	21	21
Serration	c	inch	1/16" x 90°	1/16" x 90°	1/16" x 90°	1/16" x 90°	1/16" x 90°	1/16" x 90°	1/16" x 90°
Bolt ISO 4762 12.9	d	mm	M8 x 30	M10 x 35	M12 x 35	M16 x 35	M16 x 35	M16 x 35	M16 x 35
Min.	e	mm	6	8	9.5	12	12	12	12
T-nuts distance min./max.	f	mm	17/25	21/31	22/41.5	25/51	25/72	25/72	25/72
Serration length	g	mm	40	50	59	75	93	92	95
min./max.	h	mm	25/28	34.9/39	57.7/61.9	70/65	79/84	85/100	85/109
	α	deg.	0°	0°	30°	0°	0°	0°	0°
	β	deg.	30°	30°	30°	45°	45°	45°	45°

SP®+ SP-ES + SP-L

INCH
SERRATION

■ Top jaws
■ T-nuts

MHB-D
Hard reversible top jaws

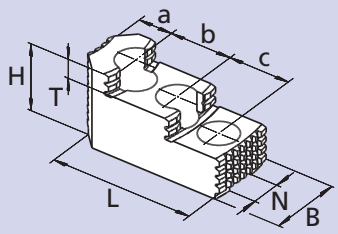

Chuck	SP 125-26	SP 160-38	SP 240-78	SP 280-92	SP 350-115 (+ES+L)
Jaw type	MHB-D 130	MHB-D 160	MHB-D 200	MHB-D 251	MHB-D 315
Jaw Id. No. (set)	12081306	12081636	12082036	12083036	12083186
B	30	34	40	45	50
H	34	39	45	56	56
L	58	65	82	105	122
T	8.5	10	10.5	13.5	13.5
N	12	14	17	21	21
Serration	1/16" x 90°	1/16" x 90°	1/16" x 90°	1/16" x 90°	1/16" x 90°
a	13	18	19	26	43
b	16	16	23	30	30
c	16	16	23	30	30
kg/set	0.6	0.9	1.7	2.85	4.05

AWB-D
Soft top jaws

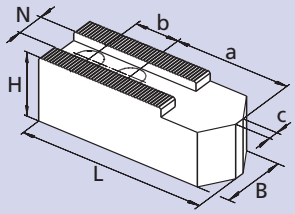

Chuck	SP 125-26	SP 160-38	SP 240-78	SP 280-92	SP 350-115 (+ES+L)
Jaw type	WBSA-D 125	AWB-D 165	AWB-D 200	AWB-D 250	AWB-D 315
Jaw Id. No. (set)	12071300*	035954	081616	081618	081619
B	30	40	40	50	50
H	30	40	40	50	50
L	60	80	90	120	140
N	12	14	17	21	21
Serration	1/16" x 90°	1/16" x 90°	1/16" x 90°	1/16" x 90°	1/16" x 90°
a	29	43	53	70	90
b	16	22	22	28	28
kg/set	0.9	2.0	2.7	5.1	6.3

* Jaws are per piece. 3 pcs. must be ordered for 1 set.

NST
T-nuts

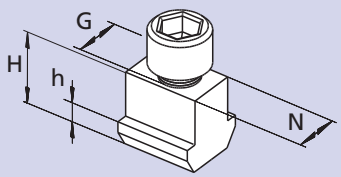

Chuck	SP 125-26	SP 160-38	SP 240-78	SP 280-92	SP 350-115 (+ES+L)
T-nut type	NST 12	NST 14	NST 17-4	NST 21-5	NST 21-5
T-nut Id. No. /pc.	089810	013863	013864	033429	033429
N	12	14	17	21	21
H	21.5	26.5	26.5	30	30
h	7.5	9.5	9.5	11	11
G	M8	M10	M12	M16	M16
Bolt ISO 4762 - 12.9	M8 x 30	M10 x 35	M12 x 35	M16 x 35	M16 x 35
Tighten torque Md max. (Nm)	30	50	70	150	150

JAWS-CATALOG

Request or download:
www.smw-autoblok.de

Spindle-Adapters for SP chucks

ISO-A DIN 55026
Spindle adapters

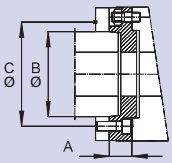

Chuck		SP 125-26	SP 160-38		SP 240-78			SP 280-92			SP 350-115 (+ES+L)		
Nose dim.		A5	A5	A6	A5	A6	A8	A6	A8	A11	A6	A8	A11
Id. No.		017083	017085	017086	017088	080174	017090	017092	017093	017094	017092	017093	017094
A	mm	26.0	25.5	25.5	25.5	32.2	34.0	32.2	38.2	36.0	32.2	38.2	36.0
B	mm	82.57	82.57	106.39	82.57	106.39	139.73	106.39	139.73	196.88	106.39	139.73	196.88
C	mm	104.8	104.8	133.4	104.8	133.4	171.4	133.4	171.4	235.0	133.4	171.4	235.0

DIN 55027
Bayonet spindle adapters type C

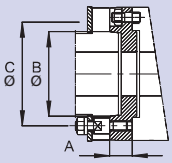

Chuck		SP 125-26	SP 160-38		SP 240-78			SP 280-92			SP 350-115 (+ES+L)		
Nose dim.		C5	C5	C6	C5	C6	C8	C6	C8	C11	C6	C8	C11
Id. No.		017056	017058	017059	017061	017062	017063	017065	017066	017067	017065	017066	017067
A	mm	19.0	25.5	25	25.5	29.0	32.2	29.0	32.2	36.5	29.0	32.2	36.5
B	mm	82.57	82.57	106.39	82.57	106.39	139.3	106.39	139.73	196.88	106.39	139.73	196.88
C	mm	104.8	104.8	133.4	104.8	133.4	171.4	133.4	171.4	235.0	133.4	171.4	235.0

DIN 55029
Camlock spindle adapters type S

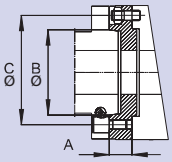

Chuck		SP 125-26	SP 160-38		SP 240-78			SP 280-92			SP 350-115 (+ES+L)		
Nose dim.		S5	S5	S6	S5	S6	S8	S6	S8	S11	S6	S8	S11
Id. No.		017117	017119	017120	017122	017123	017124	017126	017127	017128	017126	017127	017128
A	mm	22.5	26.0	29.0	26.0	29.0	36.0	32.0	36.0	42.0	32.0	36.0	42.0
B	mm	82.57	82.57	106.39	82.57	106.39	139.3	106.39	139.73	196.88	106.39	139.73	196.88
C	mm	104.8	104.8	133.4	104.8	133.4	171.4	133.4	171.4	235.0	133.4	171.4	235.0

Important for maintenance and safe operation, to be ordered with the chuck

Grease K05®

Special grease for manual and power chucks

Cartridge 14 Oz. (DIN 1284)
Grease content 500 g
Id. No. 016440

Can 1000 g
Id. No. 011881

- High adhesion
- High resistance against coolant
- High load bearing capacity
- Low friction coefficient
- High gripping force
- Avoids tribocorrosion

Grease gun

Grease gun (DIN 1283) for cartridges 14 Oz. (DIN 1284).
■ Also refillable from grease can 1000 g.

Lubrication set Id. No. 083726
Supply range
- Grease gun
- 1 Adapter flexible for high pressure grease nipple
- 1 Adapter for cone grease nipple

BIG BORE® BB-N

INCH
SERRATION

Front-end pneumatic power chucks EXTRA large through hole Ø 140 - 410 mm

- Chuck size 400 - 800
- Standard jaw stroke
- 3 jaws

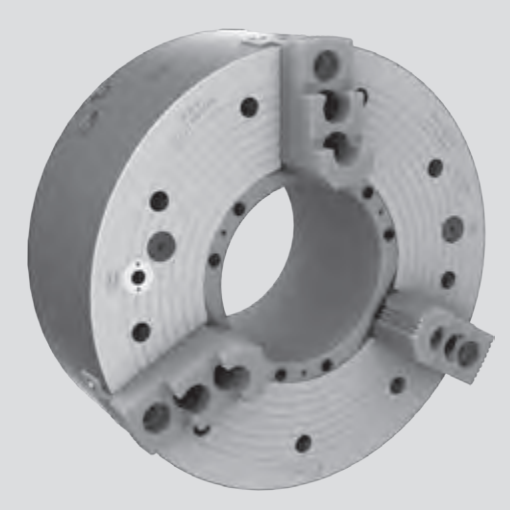

Application/customer benefits

- End machining of long pipe
- Full spindle bore can be used

Technical features

- Air chuck for external/internal clamping with built-in pneumatic cylinder
- Air feed via distributor ring and SMW-profile seals, at stopped spindle
- Built in non-return valves maintain the air pressure during machining
- Clamping pressure level constantly checked by a safety control system (only for external clamping)
- Jaw stroke control for OD and ID Gripping (not BB-N 400-140)

Standard equipment

3-jaw chuck
2 elbow unions G 1/2“
12 mounting bolts (9 for the BB-N 400)
1 lifting eye bolt
1 set T-nuts with bolts
1 set soft top jaws
without distributor ring bracket

Ordering example

BIG BORE BB-N 470-191/Z310

Accessories

Control unit AC-BB/AC-XN
(see general catalog pages 308-311)

The principle invented by SMW: air supply via distributor ring and SMW-profile seal rings

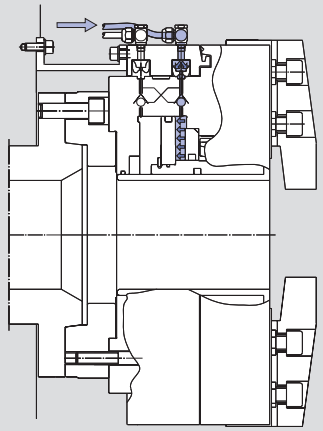

Fig. 1
Open/close movement (only possible at stopped spindle). The profile seals deform radially under the pneumatic pressure, sealing on the chuck body and filling the cylinder chamber.
When the clamping pressure is reached, the air feed is stopped, closing the twin non-return valve.

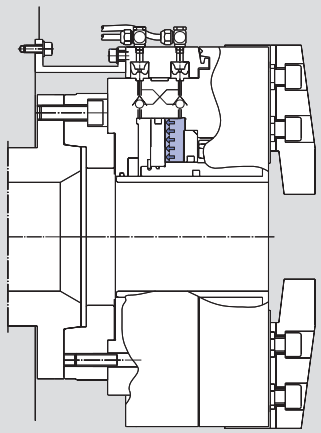

Fig. 2
The SMW-profile seals lift to the expanded position, not touching the chuck body anymore.
The clamping pressure is maintained by the twin non-return valve.
The chuck can start to rotate.

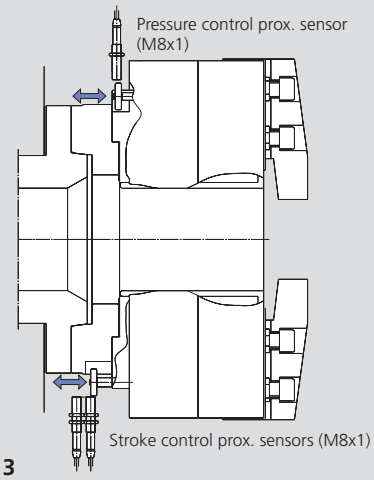

Fig. 3
Pressure control: If the pressure is less than a pre-set safety level, the switch ring moves into the proximity-switch field, sending an alarm signal.
Jaw stroke control: If the part is clamped in a not correct jaw stroke position, the switch ring moves into the proximity-switch field sending an alarm signal.*

* BB-N-400-140 has no stroke control

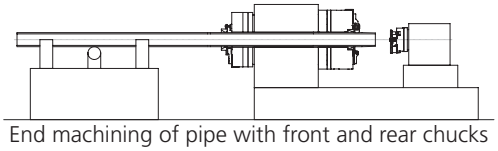

End machining of pipe with front and rear chucks

Technical data

SMW-AUTOBLOK Type BB-N		400-140	470-191	500-205	500-230	600-275	630-310	800-410
Id. No.		052300	053535	053830	053832	053834	053836	053838
Through-hole	mm (inch)	140 (5.51“)	191 (7.52“)	205 (8.07“)	230 (9.06“)	275 (10.83“)	310 (12.20“)	410 (16.14“)
Stroke per jaw	mm (inch)	7 (0.28“)	7 (0.28“)	8.5 (0.33“)	8.5 (0.33“)	8.5 (0.33“)	10 (0.39“)	12 (0.47“)
Operating pressure min./max.	bar (psi)	2/10 (29/145)	2/10 (29/145)	2/10 (29/145)	2/10 (29/145)	2/10 (29/145)	2/10 (29/145)	2/10 (29/145)
Piston area	cm^2	710	565	1024	940	990	1270	2064
Gripping force at 6 bar	kN (lbf)	160 (35969)	115 (25853)	210 (47210)	190 (42714)	200 (44962)	220 (49458)	330 (74186)
Max. speed	r.p.m.	1700	1700	1300	1300	1300	1000	750
Air consumption/jaw stroke at 6 bar	liter	21	16	36	32	34	52	108
Weight (without top jaws)	kg (lbs)	150 (331)	150 (331)	230 (507)	200 (441)	270 (595)	420 (926)	650 (1433)
Moment of inertia	$kg \cdot m^2$	3.22	5.66	8.53	8	15	28	71.25

SMW-AUTOBLOK 287

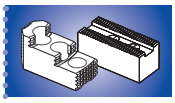

SMW-AUTOBLOK 286

Main dimensions and technical data

Jaw position: Open for external clamping

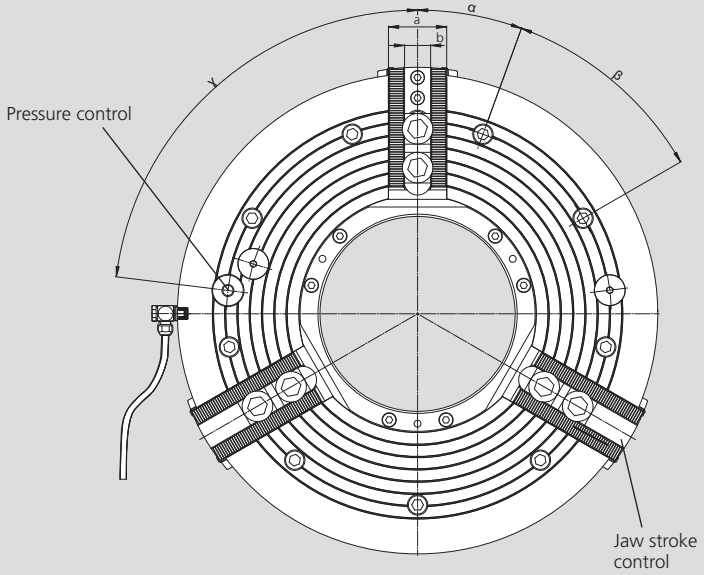

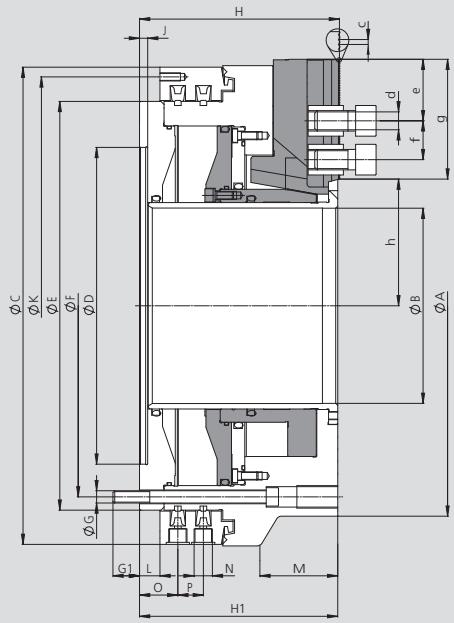

* All hoses/piping must be at least 1/2" ID., and min. 3/4" ID from size 630 on!
** BB-N-400-140 has no stroke control

To determine the exact position of the jaw stroke control and the pressure control please ask for a customer drawing.

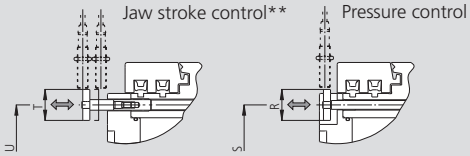

enlarged illustration

Subject to technical changes.
For more detailed information please ask our customer service.

SMW-AUTOBLOK Type BB-N			400-140	470-191	500-205	500-230	600-275	630-310	800-410
Id. No.			**052300**	**053535**	**053830**	**053832**	**053834**	**053836**	**053838**
Mounting			**Z310**	**Z310**	**Z415**	**Z415**	**Z450**	**Z510**	**Z700**
	A	mm	422	470	540	570	605	662	800
	B	mm	140	191	205	230	275	310	410
	C	mm	467	467	570	570	605	685	850
	D H6	mm	310	310	415	415	450	510	700
	E	mm	400	400	500	500	535	610	775
Fixing bolts circle	**F**	mm	374	374	474	474	508	580	745
	G	mm	M12	M12	M12	M12	M12	M16	M16
	G1	mm	26	26	27	27	27	30	30
	H	mm	196	196	225	225	225	263	305
	H1	mm	194	194	223	223	223	261	303
	J	mm	8	8	8	8	8	8	8
Thread circle 6x M8	**K**	mm	448	448	550	550	585	666	830
	L	mm	20	20	20	20	20	20	25
	M	mm	70	-	98	98	-	115	154
Pneumatic connection	**N**	inch	G 1/2"	G 1/2"	G 1/2"	G 1/2"	G 1/2"	G 1/2"	G 1/2"
	O	mm	37	37	37	37	37	39.5	44.5
	P	mm	26	26	26	26	26	33	33
	R	mm	35	35	35	35	35	42	35
	S	mm	374	374	474	474	508	575	745
	T	mm	35	35	35	35	35	35	35
	U	mm	374	374	474	474	508	580	745
	a	mm	57	57	57	57	57	75	75
	b	mm	25.5	25.5	25.5	25.5	25.5	30	30
Serration	**c**	inch	3/32" x 90°	3/32" x 90°	3/32" x 90°	3/32" x 90°	3/32" x 90°	3/32" x 90°	3/32" x 90°
Bolt ISO 4762 12.9	**d**	mm	M20	M20	M20	M20	M20	M24	M24
Min.	**e**	mm	13	13	14	14	14	16	16
T-nuts distance min./max.	**f**	mm	38/85	38/85	38/102	38/102	38/94	47/103	47/130
Serration length	**g**	mm	117.5	117	138	138	130	142	171.5
Min./max.	**h**	mm	94.5/101.5	124/131	133.5/142	143.5/152	165/173.5	190.5/200.5	243/255
	α	deg.	20	20	15	15	15	15	15
	β	deg.	9 x 40	9 x 40	12 x 30	12 x 30	12 x 30	12 x 30	12 x 30
(Pressure control)	**γ**	deg.	83	83	60	60	60	60	60

BIG BORE® BB-N

INCH
SERRATION

■ Top jaws
■ T-nuts

MHB-D
Hard reversible top jaws

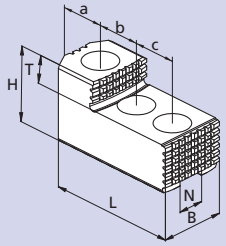

Gripping ranges

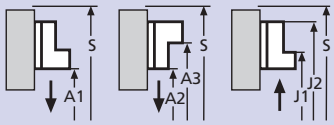

Chuck BB-N	400-140	470-191	500-205	500-230	600-275	630-310	800-410
Jaw type	MHB-D 500	MHB-D 500	MHB-D 500	MHB-D 500	MHB-D 500	MHB-D 630	MHB-D 800
Id. No./set	12084546	12084546	12084546	12084546	12084546	12086446	12088046
B	60	60	60	60	60	75	75
H	75	75	75	75	75	85	85
L	140	140	140	140	140	160	220
T	2x19	2x19	2x19	2x19	2x19	30	30
N	25.5	25.5	25.5	25.5	25.5	30	30
Serration	3/32" x 90°	3/32" x 90°	3/32" x 90°	3/32" x 90°	3/32" x 90°	3/32" x 90°	3/32" x 90°
a	46	46	46	46	46	30	51
b	38	38	38	38	38	50	62
c	38	38	38	38	38	50	62
kg/set	6.6	6.6	6.6	6.6	6.6	13.5	19.5
A_1	65-238	100-273	150-358	175-378	224-424	275-485	320-590
A_2	110-284	145-320	200-405	225-425	348-548	275-485	330-600
A_3	294-470	330-505	385-590	410-610	447-647	475-685	590-865
J_1	175-350	210-385	265-470	285-490	307-506	395-610	500-770
J_2	355-530	390-565	445-650	465-670	504-704	595-810	760-1030
S	585	620	705	725	735	820	1050

GAB
Hard top jaws

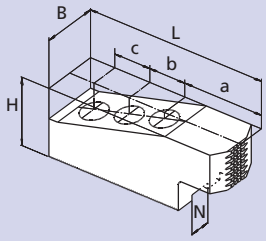

Gripping ranges

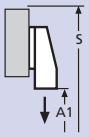

Chuck BB-N	400-140	470-191	500-205	500-230	600-275	630-310	800-410
Jaw type	GAB 500	GAB 500	GAB 500	GAB 500	GAB 500	GAB 630	GAB 800
Id. No./set	12085146	12085146	12085146	12085146	12085146	12086546	12089046
B	55	55	55	55	55	75	75
H	73	73	73	73	73	82	82
L	195	195	195	195	195	245	320
N	25.5	25.5	25.5	25.5	25.5	30	30
Serration	3/32" x 90°	3/32" x 90°	3/32" x 90°	3/32" x 90°	3/32" x 90°	3/32" x 90°	3/32" x 90°
a	96	96	96	96	96	113	165
b	38	38	38	38	38	50	60
c	38	38	38	38	38	50	60
kg/set	16.5	16.5	16.5	16.5	16.5	31.5	40.5
A_1	25-140	60-175	50-260	70-280	107-308	105-320	95-272
S	585	620	705	725	700	820	1010

WBSA-D / WBC-D
Soft top jaws

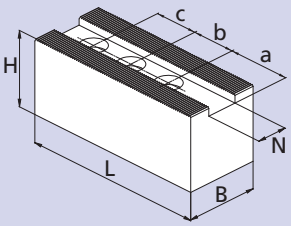

Gripping ranges

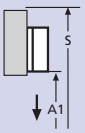

Chuck BB-N	400-140	470-191	500-205	500-230	600-275	630-310	800-410
Jaw type	WBSA-D 500	WBSA-D 500	WBSA-D 500	WBSA-D 500	WBSA-D 500	WBC-D 630	WBC-D 800
Id. No./pc.	12075050	12075050	12075050	12075050	12075050	12076440	12078040
B	60	60	60	60	60	80	80
H	60	60	60	60	60	80	80
L	170	170	170	170	170	240	320
N	25.5	25.5	25.5	25.5	25.5	30	30
Serration	3/32" x 90°	3/32" x 90°	3/32" x 90°	3/32" x 90°	3/32" x 90°	3/32" x 90°	3/32" x 90°
a	69	69	69	69	69	110	165
b	38	38	38	38	38	50	60
c	38	38	38	38	38	50	60
kg/piece	3.6	3.6	3.6	3.6	3.6	11	15
A_1	25-195	60-230	105-315	125-325	161-362	110-325	95-272
S	545	580	660	680	707	815	1010

JAWS-CATALOG

Request or download: www.smw-autoblok.de

BIG BORE® BB-N

INCH
SERRATION

WBC-D, WBCL-D
Soft top jaws long version

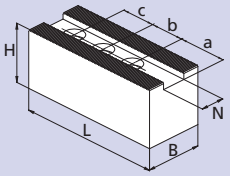

Gripping ranges

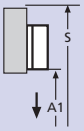

Chuck BB-N	400-140	470-191	500-205	500-230	600-275	630-310	800-410
Jaw type	WBC-D 502	WBC-D 502	WBC-D 502	WBC-D 502	WBC-D 502	WBC-D 800	WBCL-D 800
Id. No./pc.	12075140	12075140	12075140	12075140	12075140	12078040	12079040
B	60	60	60	60	60	80	80
H	60	60	60	60	60	80	80
L	205	205	205	205	205	320	390
N	25.5	25.5	25.5	25.5	25.5	30	30
Serration	3/32" x 90°	3/32" x 90°	3/32" x 90°	3/32" x 90°	3/32" x 90°	3/32" x 90°	3/32" x 90°
a	104	104	104	104	104	165	230
b	38	38	38	38	38	60	60
c	38	38	38	38	38	60	60
kg / piece	4.5	4.5	4.5	4.5	4.5	15	18
A_1	-	0-155	35-245	55-265	91-292	25-195	25-235
S	-	575	660	680	707	845	1020

NST
T-nuts

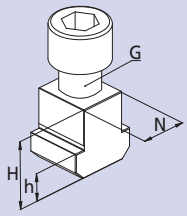

Chuck BB-N	400-140	470-191	500-205	500-230	600-275	630-310	800-410
T-nut type	NST	NST	NST	NST	NST	NST	NST
Id. No./pc.	12065020	12065020	12065020	12065020	12065020	13063900	13063900
N	25.5	25.5	25.5	25.5	25.5	30	30
H	34	34	34	34	34	44	44
h	15	15	15	15	15	18	18
G	M20	M20	M20	M20	M20	M24	M24
Bolt ISO 4762 12.9	M20 x 40	M20 x 40	M20 x 40	M20 x 40	M20 x 40	M24 x 60	M24 x 60

Spindle-Adapters for BIG BORE chucks

ISO-A DIN 55026
Spindle-Adapters

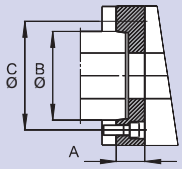

BB-N		400-140/470-191			500-205/500-230			600-275			630-310			800-410	
Spindle nose		A8	A11	A15	A11	A15	A20	A11	A15	A20	A11	A15	A20	A15	A20
Id. No.		24184020	24114020	24124020	24115030	24125020	24175020	24116020	24126020	24176020	24116320	24126320	24176320	24128020	24178020
A	mm	40	40	40	40	40	40	40	40	40	50	50	50	50	50
B	mm	139.719	196.869	285.775	196.869	285.775	412.775	196.869	285.775	412.775	196.869	285.775	412.775	285.775	412.775
C	mm	171.4	235	330.2	235	330.2	463.6	235	330.2	463.6	235	330.2	463.6	330.2	463.6

Bayonet and camlock spindle adapters are available on request

JAWS-CATALOG
Request or download: www.smw-autoblok.de

BIG BORE® BB-N-ES

INCH SERRATION

Front-end pneumatic power chucks EXTRA large through hole Ø 140 - 560 mm

- Chuck size 400 - 1000
- Extended jaw stroke
- 3 jaws

Application/customer benefits

- End machining of long pipe with upset ends
- Rapid and clamping stroke for short clamping cycles
- Full spindle bore can be used

Technical features

- Air chuck for external clamping with built-in pneumatic cylinder
- Rapid and clamping stroke
- Air feed via distributor ring and SMW-profile seals, at stopped spindle
- Built in non-return valves maintain the air pressure during machining
- Clamping pressure level constantly checked by a safety control system (only for external clamping)
- Clamping stroke control (no clamping in rapid stroke) is monitored

Standard equipment

3-jaw chuck
2 elbow unions G 1/2" (4 for BB-N 1000)
12 mounting bolts (9 for the BB-N-ES 400)
1 lifting eye bolt
1 set T-nuts with bolts
1 set soft top jaws
without distributor ring bracket

Ordering example

BIG BORE BB-N-ES 400/Z310

Accessories

Control unit AC-BB/AC-XN
(see general catalog pages 308-311)

The principle invented by SMW: air supply via distributor ring and SMW-profile seal rings

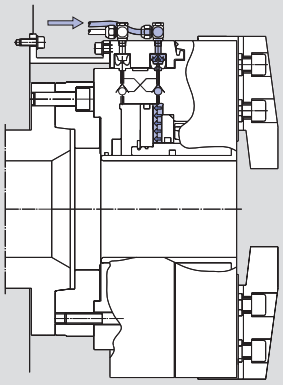

Fig. 1
Open/close movement (only possible at stopped spindle). The profile seals deform radially under the pneumatic pressure, sealing on the chuck body and filling the cylinder chamber.
When the clamping pressure is reached, the air feed is stopped, closing the twin non-return valve.

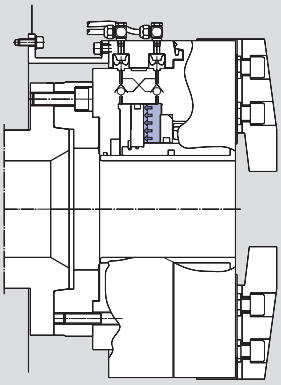

Fig. 2
The SMW-profile seals lift to the expanded position, not touching the chuck body anymore.
The clamping pressure is maintained by the twin non-return valve.
The chuck can start to rotate.

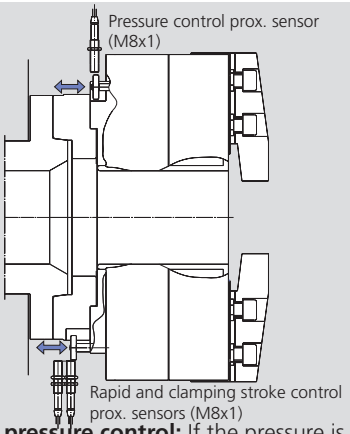

Fig. 3
Safety pressure control: If the pressure is less than a pre-set safety level, the switch ring moves into the proximity-switch field, sending an alarm signal.
Jaw stroke control: If the part is clamped in a not correct jaw stroke position, the switch ring moves into the proximity-switch field sending an alarm signal.

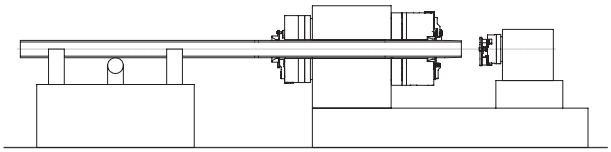

End machining of pipe with front and rear chucks

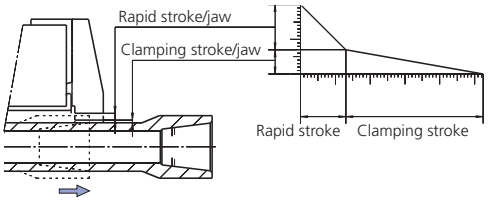

Technical data

SMW-AUTOBLOK Type BB-N-ES		400-140	470-191	500-205	500-230	600-275	630-325	850-375	1000-560
Id. No.		052330	053536	052651	052652	052990	052653	052654	052655
Through-hole	mm (inch)	140 (5.51")	191 (7.52")	205 (8.07")	230 (9.06")	275 (10.83")	325 (12.80")	375 (14.76")	560 (22.05")
Total stroke per jaw	mm (inch)	20 (0.79")	20 (0.79")	25.4 (1")	25.4 (1")	25.4 (1")	25.4 (1")	25.4 (1")	25.4 (1")
Rapid stroke per jaw*	mm (inch)	13 (0.51")	13 (0.51")	16.9 (0.67")	16.9 (0.67")	16.9 (0.67")	17.2 (0.67")	13.4 (0.53")	15 (0.59")
Clamping stroke per jaw	mm (inch)	7 (0.28")	7 (0.28")	8.5 (0.33")	8.5 (0.33")	8.5 (0.33")	8.2 (0.32")	12 (0.47")	10.4 (0.41")
Operating pressure min./max.	bar (psi)	2/10 (29/145)	2/10 (29/145)	2/10 (29/145)	2/10 (29/145)	2/10 (29/145)	2/10 (29/145)	2/10 (29/145)	2/10 (29/145)
Piston area	cm^2	705	565	1004	895	954	1192	1340	1090
Gripping force at 6 bar	kN (lbf)	130 (29225)	115 (25853)	190 (42714)	170 (38218)	185 (41590)	200 (44962)	200 (44962)	170 (38218)
Max. speed	r.p.m.	1300	1300	1100	1300	1100	900	750	450
Air consumption/jaw stroke at 6 bar	liter	29	22	41	37	39	48	79	57
Weight (without top jaws)	kg (lbs)	200 (441)	190 (419)	340 (750)	325 (717)	360 (794)	630 (1389)	970 (2138)	960 (2116)
Moment of inertia	$kg \cdot m^2$	6.5	9.83	16.4	16.1	19	36	105	160

* Could not be used for clamping

SMW-AUTOBLOK 291

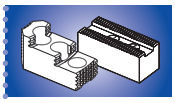

SMW-AUTOBLOK 290

Jaw position: Open for external clamping

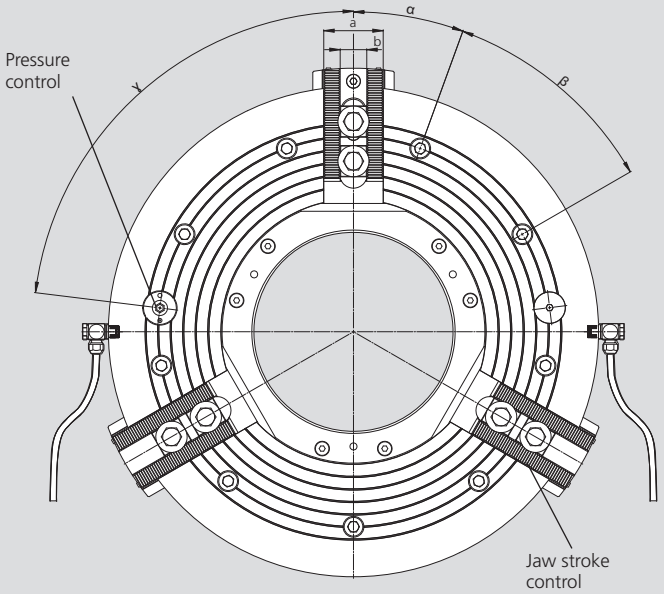

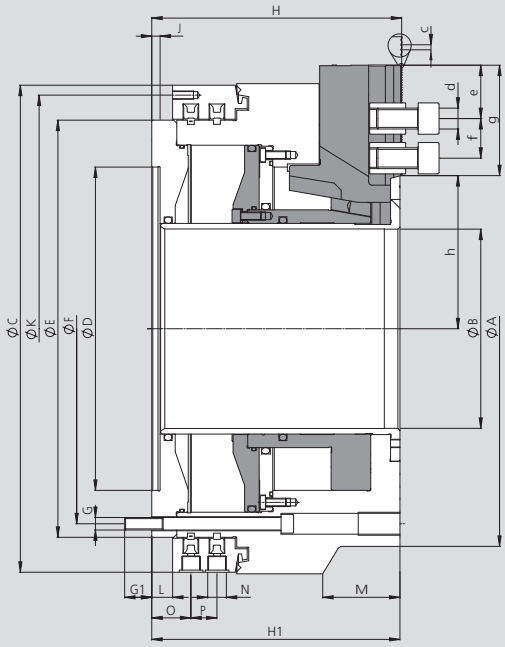

* All hoses/piping must be at least 1/2" ID, and min 3/4" ID from chuck size 630 on.

BB-N-ES 1000 needs 2 hoses per function open/close (see installation manual).

To determine the exact position of the jaw stroke control and the pressure control please ask for a customer drawing.

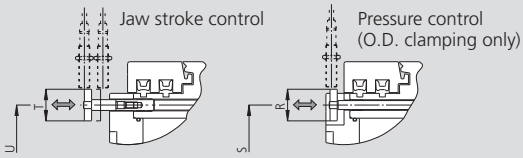

enlarged illustration

Subject to technical changes.
For more detailed information please ask our customer service.

SMW-AUTOBLOK Type BB-N-ES			400-140	470-191	500-205	500-230	600-275	630-325	850-375	1000-560
Id. No.			**052330**	**053536**	**052651**	**052652**	**052990**	**052653**	**052654**	**052655**
Mounting			**Z310**	**Z310**	**Z415**	**Z415**	**Z450**	**Z510**	**Z700**	**Z700**
	A	mm	467	470	570	570	605	685	850	1000
	B	mm	140	191	205	230	275	325	375	560
	C	mm	467	467	570	570	605	685	850	925
	D H6	mm	310	310	415	415	450	510	700	700
	E	mm	400	400	500	500	535	610	775	850
Fixing bolts circle	**F**	mm	374	374	474	474	508	580	745	815
	G	mm	M12	M12	M12	M12	M12	M16	M16	M16
	G1	mm	26	26	25	25	25	30	30	30
	H	mm	240	240	282	282	282	307.5	354	332
	H1	mm	238	238	280	280	280	305.5	352	330
	J	mm	8	8	8	8	8	8	8	10
Thread circle 6 x M8	**K**	mm	448	448	550	550	585	666	830	910
	L	mm	20	20	20	20	20	20	25	33
	M	mm	-	-	-	-	-	-	-	224
Pneumatic connection	**N**	inch	G 1/2"	G 1/2"	G 1/2"	G 1/2"	G 1/2"	G 1/2"	G 1/2"	G 1/2"
	O	mm	37	37	37	37	37	39.5	44.5	52.5
	P	mm	26	26	26	26	26	33	33	33
	R	mm	35	35	35	35	35	42	35	42
	S	mm	374	374	474	474	508	580	745	815
	T	mm	35	35	35	35	35	35	35	35
	U	mm	374	374	474	474	508	580	745	815
	a	mm	57	57	57	57	57	75	75	75
	b	mm	25.5	25.5	25.5	25.5	25.5	30	30	30
Serration	**c**	inch	3/32" x 90°	3/32" x 90°	3/32" x 90°	3/32" x 90°	3/32" x 90°	3/32" x 90°	3/32" x 90°	3/32" x 90°
Bolt ISO 4762 12.9	**d**	mm	M20	M20	M20	M20	M20	M24	M24	M24
Min.	**e**	mm	14	14	14	14	14	16	16	16
T-nuts distance min./max.	**f**	mm	38/90	38/85	38/104	38/92	38/79	47/100	47/140	47/125
Serration length	**g**	mm	121	106	140	127.5	116.5	138	182	166
Min./max.	**h**	mm	104/124	127/147	145.6/171	158/182.5	179.1/204.5	204.6/230	242.6/268	334.6/360
	α	deg.	20	20	15	15	15	15	15	15
	β	deg.	9 x 40	9 x 40	12 x 30	12 x 30	12 x 30	12 x 30	12 x 30	12 x 30
(Pressure control)	**γ**	deg.	83	83	60	60	60	60	60	60

BIG BORE®
BB-N-ES

INCH SERRATION

■ Top jaws
■ T-nuts

MHB-D
Hard reversible top jaws

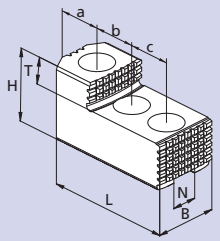

Gripping ranges

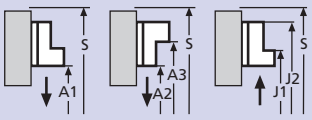

Chuck BB-N-ES	400-140	470-191	500-205	500-230	600-275	630-325	850-375	1000-560
Jaw type	MHB-D 500	MHB-D 500	MHB-D 500	MHB-D 500	MHB-D 500	MHB-D 630	MHB-D 800	MHB-D 800
Id. No.	12084546	12084546	12084546	12084546	12084546	12086446	12088046	12088046
B	60	60	60	60	60	75	75	75
H	75	75	75	75	75	85	85	85
L	140	140	140	140	140	160	220	220
T	2 x 19	2 x 19	2 x 19	2 x 19	2 x 19	30	30	30
N	25.5	25.5	25.5	25.5	25.5	30	30	30
Serration	3/32" x 90°	3/32" x 90°	3/32" x 90°	3/32" x 90°	3/32" x 90°	3/32" x 90°	3/32" x 90°	3/32" x 90°
a	46	46	46	46	46	30	51	51
b	38	38	38	38	38	50	62	62
c	38	38	38	38	38	50	62	62
kg/set	6.6	6.6	6.6	6.6	6.6	13.5	19.5	19.5
A_1	78-264	113-270	175-388	200-388	252-422	295-500	320-610	470-760
A_2	125-310	160-315	225-435	250-435	376-546	295-500	330-620	480-770
A_3	310-495	345-500	410-620	435-620	475-645	495-700	590-865	745-1030
J_1	-	-	-	-	-	-	-	-
J_2	-	-	-	-	-	-	-	-
S	635	640	765	765	765	870	1070	1250

GAB
Hard top jaws

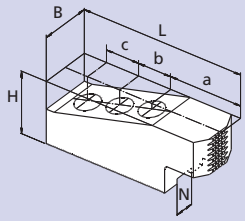

Gripping ranges

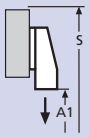

Chuck BB-N-ES	400-140	470-191	500-205	500-230	600-275	630-325	850-375	1000-560
Jaw type	GAB 500	GAB 500	GAB 500	GAB 500	GAB 500	GAB 630	GAB 800	GAB 800
Id. No.	12085146	12085146	12085146	12085146	12085146	12086546	12089046	12089046
B	55	55	55	55	55	75	75	75
H	73	73	73	73	73	82	82	82
L	195	195	195	195	195	245	320	320
N	25.5	25.5	25.5	25.5	25.5	30	30	30
Serration	3/32" x 90°	3/32" x 90°	3/32" x 90°	3/32" x 90°	3/32" x 90°	3/32" x 90°	3/32" x 90°	3/32" x 90°
a	96	96	96	96	96	113	165	165
b	38	38	38	38	38	50	60	60
c	38	38	38	38	38	50	60	60
kg/set	16.5	16.5	16.5	16.5	16.5	31.5	40.5	40.5
A_1	25-160	60-165	75-290	100-290	135-306	130-335	95-385	245-535
S	635	640	765	765	740	870	1060	1210

WBSA-D/WBC-D
Soft top jaws

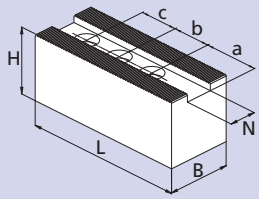

Gripping ranges

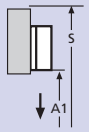

Chuck BB-N-ES	400-140	470-191	500-205	500-230	600-275	630-325	850-375	1000-560
Jaw type	WBSA-D 500	WBSA-D 500	WBSA-D 500	WBSA-D 500	WBSA-D 500	WBC-D 630	WBC 800	WBC-D 800
Id. No.	12075050	12075050	12075050	12075050	12075050	12076440	12078040	12078040
B	60	60	60	60	60	80	80	80
H	60	60	60	60	60	80	80	80
L	170	170	170	170	170	240	320	320
N	25.5	25.5	25.5	25.5	25.5	30	30	30
Serration	3/32" x 90°	3/32" x 90°	3/32" x 90°	3/32" x 90°	3/32" x 90°	3/32" x 90°	3/32" x 90°	3/32" x 90°
a	69	69	69	69	69	110	165	165
b	38	38	38	38	38	50	60	60
c	38	38	38	38	38	50	60	60
kg/piece	3.6	3.6	3.6	3.6	3.6	11	15	15
A_1	35-220	70-225	130-335	155-335	189-360	135-340	95-385	245-535
S	590	595	720	720	740	865	1060	1210

JAWS-CATALOG

Request or download: www.smw-autoblok.de

BIG BORE® BB-N-ES

INCH SERRATION

WBC-D, WBCL-D
Soft top jaws long version

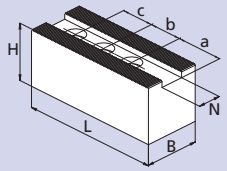

Gripping ranges

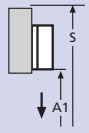

Chuck BB-N-ES	400-140	470-191	500-205	500-230	600-275	630-325	850-375	1000-560
Jaw type	WBC-D 502	WBC-D 502	WBC-D 502	WBC-D 502	WBC-D 502	WBC-D 800	WBCL-D 800	WBCL-D 800
Id. No./pc.	12075140	12075140	12075140	12075140	12075140	12078040	12079040	12079040
B	60	60	60	60	60	80	80	80
H	60	60	60	60	60	80	80	80
L	205	205	205	205	205	320	390	390
N	25.5	25.5	25.5	25.5	25.5	30	30	30
Serration	3/32" x 90°	3/32" x 90°	3/32" x 90°	3/32" x 90°	3/32" x 90°	3/32" x 90°	3/32" x 90°	3/32" x 90°
a	104	104	104	104	104	165	230	230
b	38	38	38	38	38	60	60	60
c	38	38	38	38	38	60	60	60
kg	4.5	4.5	4.5	4.5	4.5	15	18	18
A1	-	0-150	60-275	85-275	119-290	25-210	25-255	115-405
S	-	595	720	720	740	895	1070	1220

NST
T-nuts

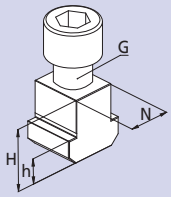

Chuck BB-N-ES	400-140	470-191	500-205	500-230	600-275	630-325	850-375	1000-560
T-nut type	NST	NST	NST	NST	NST	NST	NST	NST
Id. No.	12065020	12065020	12065020	12065020	12065020	13063900	13063900	13063900
N	25.5	25.5	25.5	25.5	25.5	30	30	30
H	34	34	34	34	34	44	44	44
h	15	15	15	15	15	18	18	18
G	M 20	M 20	M 20	M 20	M 20	M 24	M24	M 24
Bolt ISO 4762 12.9	M20 x 40	M20 x 40	M20 x 40	M20 x 40	M20 x 40	M24 x 60	M24 x 60	M24 x 60

Spindle-Adapters for BIG BORE chucks

ISO-A DIN 55026
Spindle-Adapters

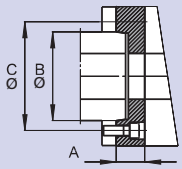

BB-N-ES		400-140/470-191			500-205/500-230			600-275			630-325			850-375		1000-560	
Spindle nose		A8	A11	A15	A11	A15	A20	A11	A15	A20	A11	A15	A20	A15	A20	A15	A20
Id. No.		24184020	24114020	24124020	24115030	24125020	24175020	24116020	24126020	24176020	24116320	24126320	24176320	24128020	24178020	on request	
A	mm	40	40	40	40	40	40	40	40	40	50	50	50	50	50		
B	mm	139.719	196.869	285.775	196.869	285.775	412.775	196.869	285.775	412.775	196.869	285.775	412.775	285.775	412.775	265.775	412.775
C	mm	171.4	235	330.2	235	330.2	463.6	235	330.2	463.6	235	330.2	463.6	330.2	463.6	330.2	463.6

Bayonet and camlock spindle adapters are available on request

JAWS-CATALOG

Request or download: www.smw-autoblok.de

BIG BORE® BB-SC

INCH SERRATION

Front-end spring clamp power chucks EXTRA large through hole Ø 275 - 565 mm

- Chuck size 600 - 1020
- Clamping with spring packs
- Rapid and clamping stroke

Application/customer benefits

- End machining of long pipe/self centering clamping
- Long jaw stroke to clear upset piping
- Highest productivity/open and clamp time < 3 sec.
- Low maintenance = high availability of the machine
- Step mode for partial opening/clamping for shimming possible
- Full spindle bore can be used

Technical features

- Self centering clamping with either 9/6/3 spring packs
- Encapsulated spring packs
- Opening via integrated cylinder
- Permanent grease lubricated for constant grip force
- Step mode for opening/clamping for shimming
- Long jaw stroke with rapid and clamping stroke
- Low air consumption
- Stroke control
- **proofline® chucks** = fully sealed – low maintenance

Standard equipment

Chuck with mounting bolts
1 set of soft top jaws
1 set of T-nuts and bolts

Ordering example

Big Bore SC 850-395
Id. No. 053350

Accessories

Air control AC-SC

The reliable principle: Clamping via encapsulated spring packs/opening via air cylinder

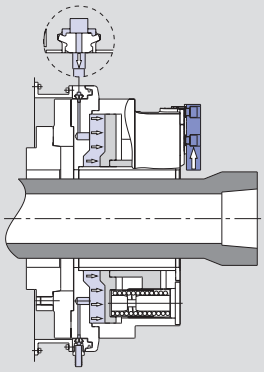

Fig. 1
Chuck open (only at stopped spindle).
The SMW profile seal collapses radial under the air pressure and seals against the chuck body. The cylinder chamber is filled.
The piston is compressing the springs, the jaws open.

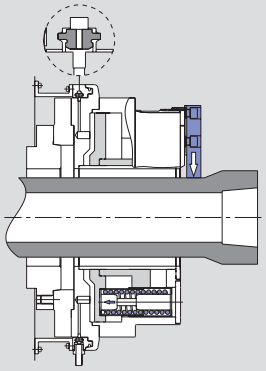

Fig. 2
Chuck clamped.
The SMW profile seal lifts off the chuck body due to elastic force. The springs expand and transmit their force onto the jaws via the wedge hook drive. The spindle can rotate.

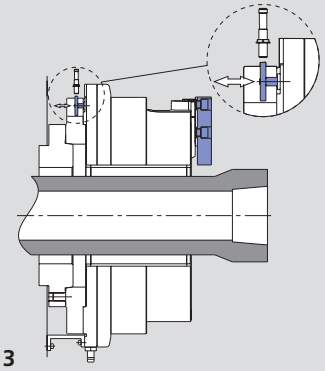

Fig. 3
Stroke control.
The position of the jaws can be monitored via a mechanical cam by 1 or 2 proximity switches.

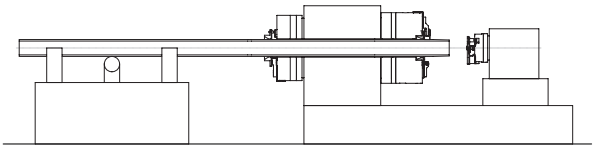

End machining of tubes with front and rear chucks

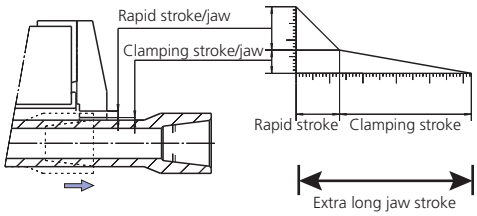

Technical data

SMW-AUTOBLOK Type		BB-SC 600-275			BB-SC 850-395			BB-SC 1020-565		
Id. No.		053540			053350			053570		
Chuck trough hole	mm (inch)	275 (10.83”)			395 (15.55”)			565 (22.24”)		
Total stroke per jaw	mm (inch)	25.4 (1”)			27 (1.06”)			27 (1.06”)		
Rapid stroke per jaw*	mm (inch)	16.9 (0.67”)			15 (0.59”)			15 (0.59”)		
Clamping stroke per jaw	mm (inch)	8.5 (0.33”)			12 (0.47”)			12 (0.47”)		
Operating pressure at 9 springs	bar (psi)	5 (73)			5 (73)			5 (73)		
Max. gripping force at 3/6/9 springs	kN (lbf)	50 (11240)	100 (22480)	150 (33721)	57 (12814)	113 (25403)	170 (38218)	57 (12814)	113 (25403)	170 (38218)
Max. speed	r.p.m.	1000			700			420		
Air consumption to open at 5 bar (73 psi)	liter	60			115			139		
Weight (without jaws)	kg (lbs)	510 (1124)			930 (2050)			1260 (2779)		
Moment of inertia	kg·m²	34			101			223		

* Could not be used for clamping

SMW-AUTOBLOK 293

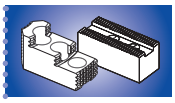

SMW-AUTOBLOK 290

BIG BORE® BB-SC

INCH SERRATION

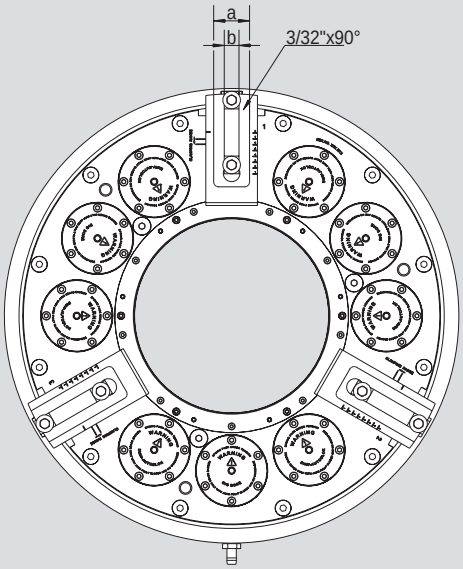

Opening pressure with all springs mounted
min. 5 bar (73 psi), max. 8 bar (116 psi)

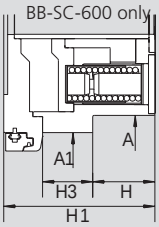

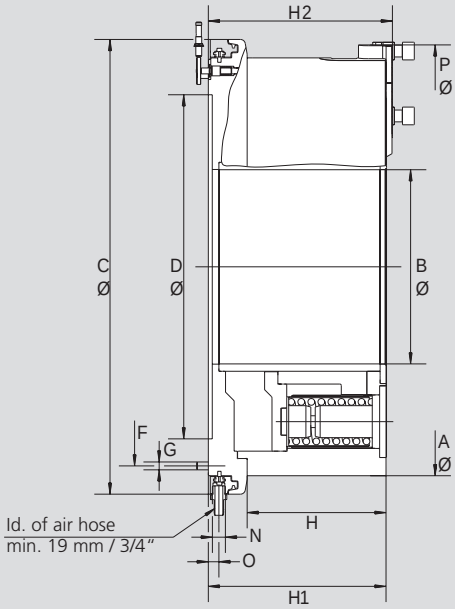

Subject to technical changes.
For more detailed information please ask our customer service.

SMW-AUTOBLOK Type			BB-SC 600-275	BB-SC 850-395	BB-SC 1020-565
Mounting			**Z520**	**Z700**	**Z870**
	A	mm	605	850	1020
(BB-SC-600-275)	**A1**	mm	675	-	-
Through hole	**B**	mm	275	395	565
	C	mm	750	925	1095
	D H6	mm	520	700	870
	F	mm	640	810	980
	G		M12 (12x)	M16 (12x)	M16 (12x)
	H		126.7	282.5	282.5
	H1		307.5	361.5	361.5
	H2		320.5	374.5	374.5
(BB-SC-600-275)	**H3**		102	-	-
	N		G 3/4"	G 3/4"	G 3/4"
	O		21.5	21.5	21.5
Max. swing	**P**		655.8	902.8	1074
	a		58	73	73
	b		25.5	30	30
Rapid stroke		mm	16.9	15	15
Clamping stroke		mm	8.5	12	12
Total clamping stroke		mm	25.4	27	27

Spindle-Adapters

Spindle-Adapters
ISO-A DIN 55026

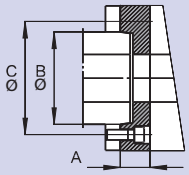

BB-SC	600-275			850-395		1020-565		
Spindle nose	A11	A15	A20	A15	A20	A15	A20	A28
Id. No.	on request	053590	053591	053362	053358	on request	053595	053596

Clamping of pipe with

BIG BORE 2G chucks

BB-N-EXL2G
BB-AZ2G
BB-FZA2G
BB-EXL-SC2G

BIG BORE BB-N-EXL2G

- Self centering
- Extra long jaw stroke
- Jaw jogging

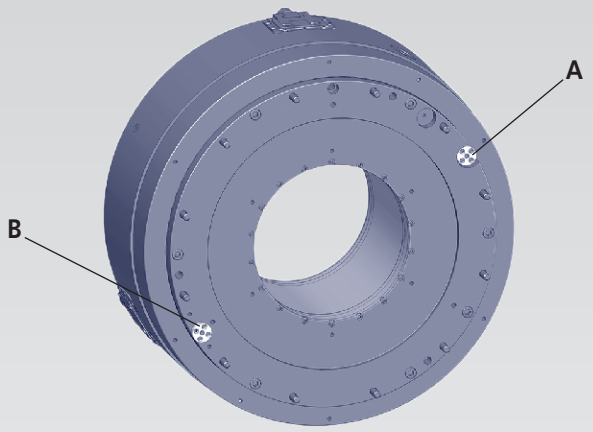

Safety features:
A: Pressure control
B: Stroke control

BIG BORE BB-AZ2G

- Self centering or compensating
- Extra long jaw stroke

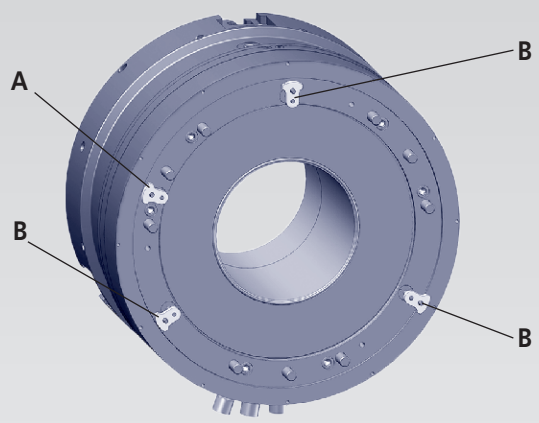

Safety features:
A: Pressure control
B: Individual stroke control for each jaw

BIG BORE BB-FZA2G

- 6 jaw sequence chuck
  (3 centering jaws - 3 compensating jaws)
- Extra long jaw stroke (radial and axial)

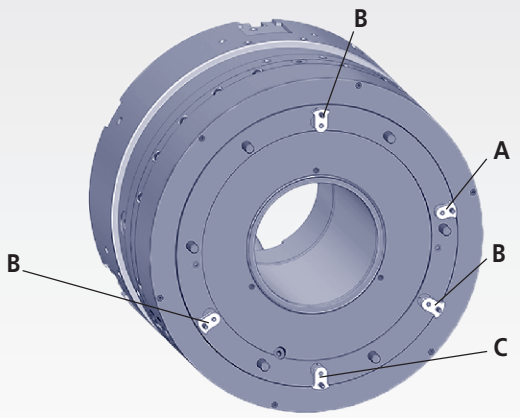

Safety features:
A: Pressure control for compensating jaws
B: Individual stroke control for each compensating jaw
C: Stroke control for retracted centering jaws

All 2G chucks

- Extra long jaw stroke
  → Extra large clearance between pipe and jaws

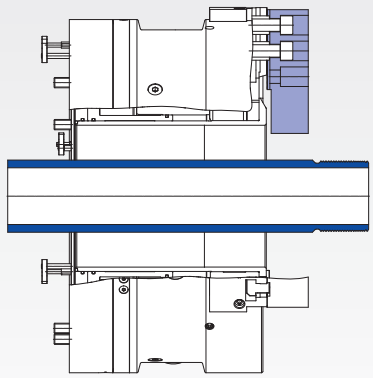

Extra long jaw stroke for:
- Safe loading of pipe, no hitting of the jaws
- Safe unloading of the threaded pipe with **no** damage of the finished thread

Clamping glossary

Extra long jaw stroke: The extra long jaw stroke is a long radial movement of the master jaws of the Big Bore 2G chuck. It can be either a fully usable clamping jaw stroke or a combination of rapid stroke and clamping stroke.
An **extra long jaw stroke** allows a safe loading and unloading of the pipe.

Individual stroke control for each jaw: In compensating clamping mode, all 3 jaws of the Big Bore 2G chucks make a different radial movement to compensate for the misalignment of the pipe to be clamped. A single central jaw stroke control cannot detect if the jaw stroke on one of the master jaws bottoms out and yet cannot hold the pipe in the requested position anymore.

The **individual stroke control for each jaw** ensures that all 3 jaws are within the correct clamping stroke and will clamp the pipe safe and accurate. The signals are picked up by proximity switches, and are monitored by the air control unit.

Stroke control for the retracted jaws: On the 6 jaw sequence chuck Big Bore FZA2G, the centering jaws are used only in static mode to align the pipes machining area to the center line of the machine. The pipe position is maintained when the compensating jaws clamp. The centering jaws are then retracted to allow the threading at the centered area. In order to make sure that the centering jaws are retracted and do not interfere with the threading tool during machining, the retracted position of the centering jaws are monitored by **a stroke control** system via a proximity switch.

Pressure control: During the machining of a pipe, the air pressure to create the gripping force is maintained by a built in safety valve system.
In case there is a drop in clamping pressure, a built in **pressure control** will detect the low pressure and pick up an alarm signal via a proximity switch. All Big Bore 2G chucks have such a pressure control as a standard feature.

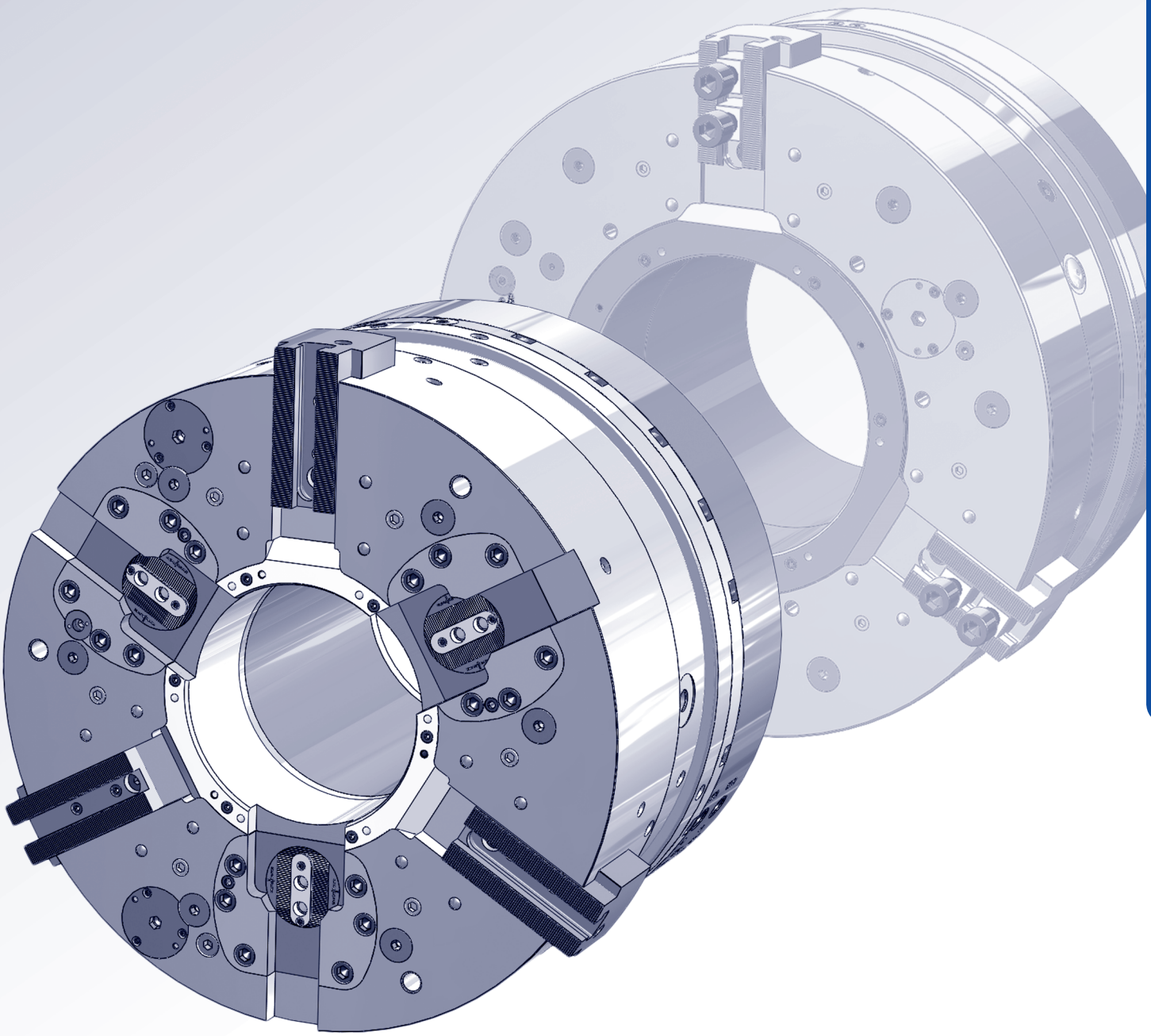

BIG BORE® BB-N-EXL2G

INCH SERRATION

Front-end pneumatic power chucks EXTRA large through hole Ø 191 - 390 mm

- Chuck size 510 - 900
- 3 jaws
- Extended extra long jaw stroke

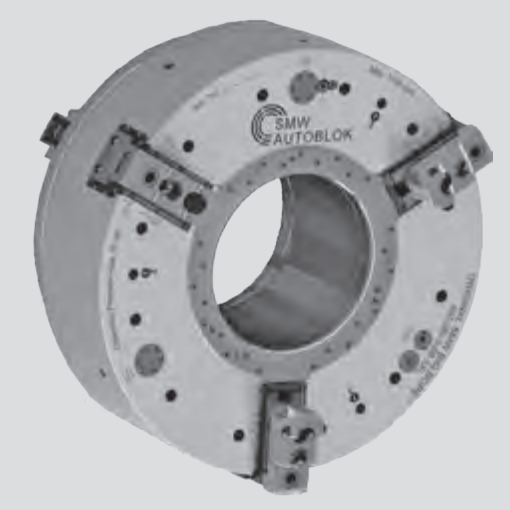

Application/customer benefits

- End machining of long pipe with collars
- Rapid and clamping stroke for short clamping cycles
- Full spindle bore can be used

Technical features

- Suitable for jaw jog mode
- Air chuck for external clamping with built-in pneumatic cylinder
- Air feed via distributor ring and SMW-profile seals, at stopped spindle
- Built in non-return valves maintain the air pressure during machining
- Clamping pressure level constantly checked by a safety control system (only for external clamping)
- Clamping stroke control (no clamping in rapid stroke) is monitored
- Extra long jaw stroke (1 1/2" total)

Standard equipment

3-jaw chuck
2 elbow unions G 1/2"
12 mounting bolts
3 lifting eye bolt, 1 set T-nuts with bolts
1 set soft top jaws
Without distributor ring bracket

Ordering example

Big Bore BB-N-EXL2G 660/Z450

Accessories

Control unit AC-BB/AC-XN
(see general catalog pages 308-311)

The principle invented by SMW: air supply via distributor ring and SMW-profile seal rings

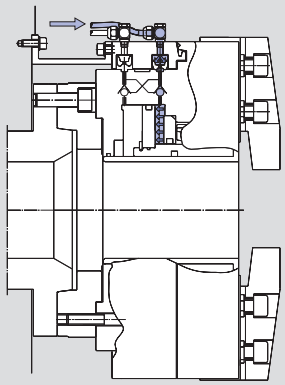

Fig. 1
Open/close movement (only possible at stopped spindle). The profile seals deform radially under the pneumatic pressure, sealing on the chuck body and filling the cylinder chamber.
When the clamping pressure is reached, the air feed is stopped, closing the non-return valve.

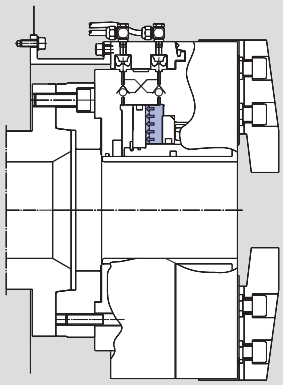

Fig. 2
The SMW-profile seals lift to the expanded position, not touching the chuck body anymore.
The clamping pressure is maintained by the twin non-return valve.
The chuck can start to rotate.

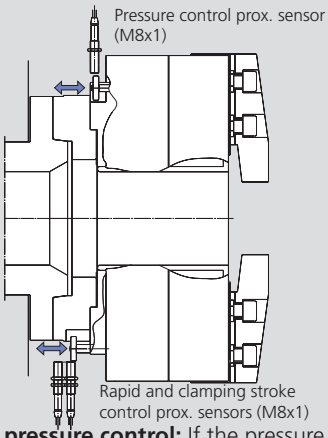

Fig. 3
Safety pressure control: If the pressure is less than a pre-set safety level, the switch ring moves into the proximity-switch field, sending an alarm signal.
Jaw stroke control: If the part is clamped in a not correct jaw stroke position, the switch ring moves into the proximity-switch field sending an alarm signal.

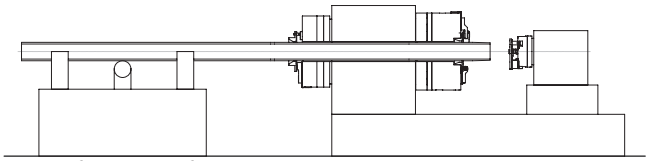

End machining of pipe with front and rear chucks

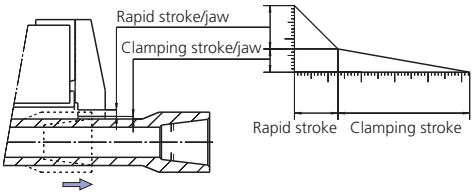

Technical data

SMW-AUTOBLOK Type		BB-N-EXL2G 510-191	BB-N-EXL2G 660-280	BB-N-EXL2G 900-390
Id. No.		**77784553**	**77784566**	**77784588**
Through-hole	mm (inch)	191 (7.52")	280 (11.02")	390 (15.35")
Total stroke per jaw	mm (inch)	38.5 (1.52")	38.5 (1.52")	38.5 (1.52")
Rapid stroke per jaw*	mm (inch)	30 (1.18")	30 (1.18")	30 (1.18")
Clamping stroke per jaw	mm (inch)	8.5 (0.33")	8.5 (0.33")	8.5 (0.33")
Operating pressure min./max.	bar (psi)	2/10 (29/145)	2/10 (29/145)	2/10 (29/145)
Piston area	cm^2	760	1300	1800
Gripping force at 6 bar (87 psi)	kN (lbf)	115 (25853)	195 (43838)	270 (60698)
Max. speed	r.p.m.	1300	1100	750
Air consumption/jaw stroke at 6 bar (87 psi)	liter	37	58	78
Weight (without top jaws)	kg (lbs)	260 (573)	470 (1036)	950 (2094)
Moment of inertia	$kg \cdot m^2$	10	30.4	112

* Could not be used for clamping

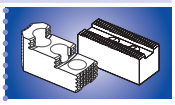

SMW-AUTOBLOK
298

BIG BORE® BB-N-EXL2G

INCH SERRATION

Jaw position: Open for external clamping

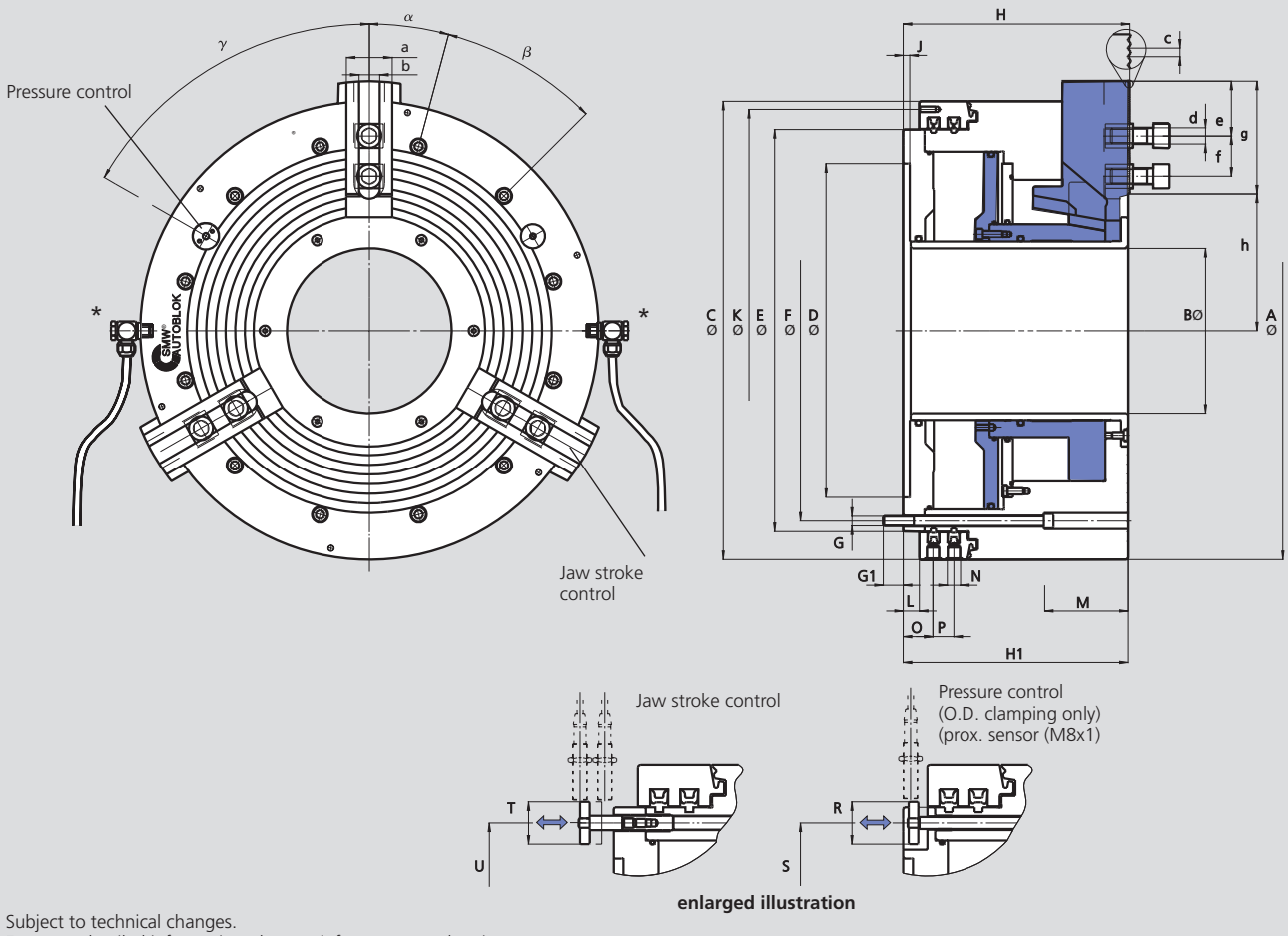

Subject to technical changes.
For more detailed information please ask for customer drawing.

SMW-AUTOBLOK Type			BB-N-EXL2G 510-191	BB-N-EXL2G 660-280	BB-N-EXL2G 900-390
Mounting			Z310	Z450	Z700
	A	mm	520	673	900
	B	mm	191	280	390
	C	mm	520	665	852
	D H6	mm	310	450	700
	E	mm	446	585	775
Fixing bolts circle	F	mm	414	558	745
	G	mm	M12	M12	M16
	G1	mm	25	25	29
	H	mm	277	292	323
	H1	mm	270	285	314
	J	mm	8	8	8
Thread circle 6 x M8	K	mm	500	640	830
	L	mm	25	25	33
	M	mm	115	110	143
Pneumatic connection	N	inch	G 1/2"	G 1/2"	G 1/2"
	O	mm	46.5	46	54.5
	P	mm	36	36	33
	R	mm	35	35	35
	S	mm	414	554	745
	T	mm	35	35	35
	U	mm	414	554	745
	a	mm	57	62	75
	b	mm	25.5	25.5	30
Serration	c	inch	3/32" x 90°	3/32" x 90°	3/32" x 90°
Bolt ISO 4762 12.9	d	mm	M20	M20	M24
Min.	e	mm	15	15	18
T-nuts distance min./max.	f	mm	30/84	30/107	36/150
Serration length	g	mm	110	142	194
Min./max.	h	mm	151.5/190	199.5/238	262/300.5
	α	deg.	20	15	15
	β	deg.	9x40	12x30	12x30
(Pressure control)	γ	deg.	83	60	60

BIG BORE®
BB-N-EXL2G

INCH SERRATION

■ Top jaws
■ T-nuts

MHB-D
Hard reversible top jaws

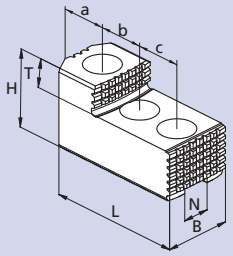

Gripping ranges

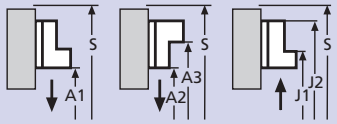

Chuck BB-N-EXL2G	510-191	660-280	900-390
Jaw type	MHB-D 500	MHB-D 500	MHB-D 800
Id. No.	12084546	12084546	12088046
B	60	60	75
H	75	75	85
L	140	140	220
T	2 x 19	2 x 19	30
N	25.5	25.5	30
Serration	3/32" x 90°	3/32" x 90°	3/32" x 90°
a	46	46	51
b	38	38	62
c	38	38	62
kg/set	6.6	6.6	19.5
A_1			
A_2			
A_3			
J_1			
J_2			
S			

GAB
Hard top jaws

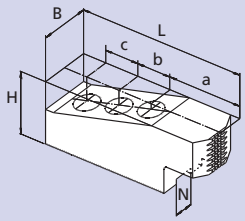

Gripping ranges

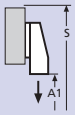

Chuck BB-N-EXL2G	510-191	660-280	900-390
Jaw type	GAB 500*	GAB 660	GAB 800
Id. No.	12085146	12086646	12089046
B	55	55	75
H	73	73	82
L	195	255	320
N	25.5	25.5	30
Serration	3/32" x 90°	3/32" x 90°	3/32" x 90°
a	96	156	165
b	38	38	60
c	38	38	60
kg/set	16.5	26.7	40.5
A_1			
S			

WBSA-D / WBC-D
Soft top jaws

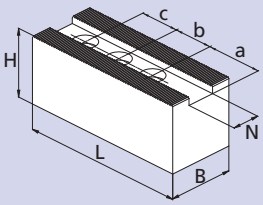

Gripping ranges

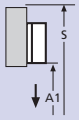

Chuck BB-N-EXL2G	510-191	660-280	900-390
Jaw type	WBSA-D 500	WBSA-D 500	WBC 800
Id. No.	12075050	12075050	12078040
B	60	60	80
H	60	60	80
L	170	170	320
N	25.5	25.5	30
Serration	3/32" x 90°	3/32" x 90°	3/32" x 90°
a	69	69	165
b	38	38	60
c	38	38	60
kg/piece	3.6	3.6	15
A_1			
S			

* For small clamping dia. please use GAB-660.

JAWS-CATALOG

Request or download: www.smw-autoblok.de

BIG BORE® BB-N-EXL2G

INCH SERRATION

WBC-D, WBCL-D
Soft top jaws long version

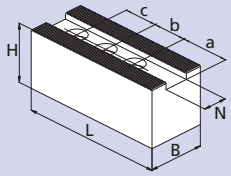

Gripping ranges

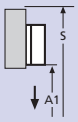

Chuck BB-N-EXL2G	510-191	660-280	900-390
Jaw type	WBC-D 502	WBC-D 502	WBCL-D 800
Id. No.	12075140	12075140	12079040
B	60	60	80
H	60	60	80
L	205	205	390
N	25.5	25.5	30
Serration	3/32" x 90°	3/32" x 90°	3/32" x 90°
a	104	104	230
b	38	38	60
c	38	38	60
kg	4.5	4.5	18
A1			
S			

NST
T-nuts

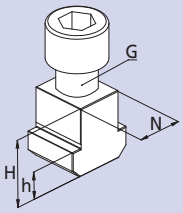

Chuck BB-N-EXL2G	510-191	660-280	900-390
T-nut Typ	NST	NST	NST
Id. No.	12065020	12065020	13063900
N	25.5	25.5	30
H	34	34	44
h	15	15	18
G	M 20	M 20	M24
Bolt ISO 4762 12.9	M20 x 40	M20 x 40	M24 x 60

Spindle-Adapters for BIG BORE BB-N-EXL2G chucks

ISO-A DIN 55026
Spindle-Adapters

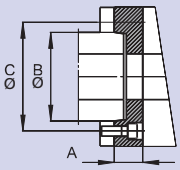

BB-N-EXL2G	510-191			660-280			900-390	
Spindle nose	A11	A15	A20	A11	A15	A20	A15	A20
Id. No.	24115120	24125120	24175120	24116620	24126620	24176620	24128020	24178020

Bayonet and camlock spindle adapters are available on request

JAWS-CATALOG
Request or download: www.smw-autoblok.de

BIG BORE® BB-AZ2G

INCH SERRATION

Front-end pneumatic power chucks EXTRA large through hole Ø 275 - 560 mm

- Chuck size 685 - 1000
- Self centering or compensating clamping
- Chuck with extra long rapid and clamping stroke - 3 jaws

Application/customer benefits

- End machining of straight or bent pipe
- Tubes can be clamped self centering or with radial jaw compensation at bent pipe, using a retractable centering chuck
- Full spindle bore can be used
- Stroke control for each jaw
- Extra long rapid and clamping stroke (1 1/2" total)
- Pressure control

Technical features

- Air chuck with built-in pneumatic cylinders for self centering or compensating clamping mode
- Air feed for both functions via distributor ring and SMW-AUTOBLOK profile seals at stopped spindle
- Built-in non return valves maintain the air pressure during machining
- Rapid and clamping stroke
- For external clamping only

Standard equipment

Chuck with mounting bolts
1 set of T-nuts with bolts

Ordering example

Big Bore BB-AZ2G 685-275- A15

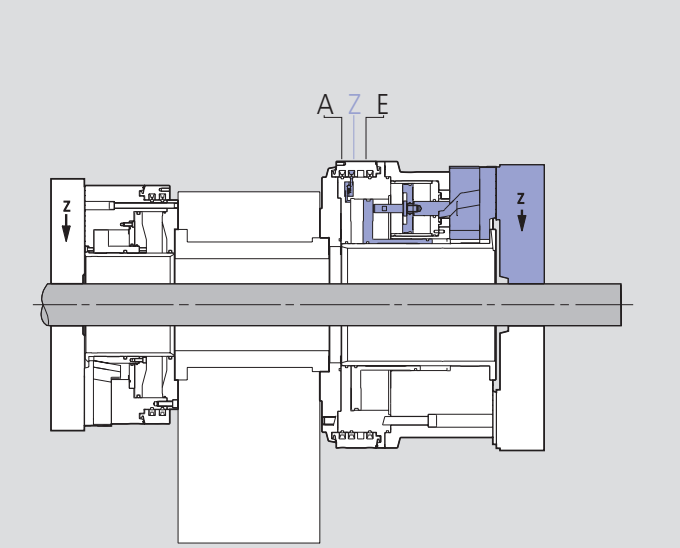

Self centering clamping

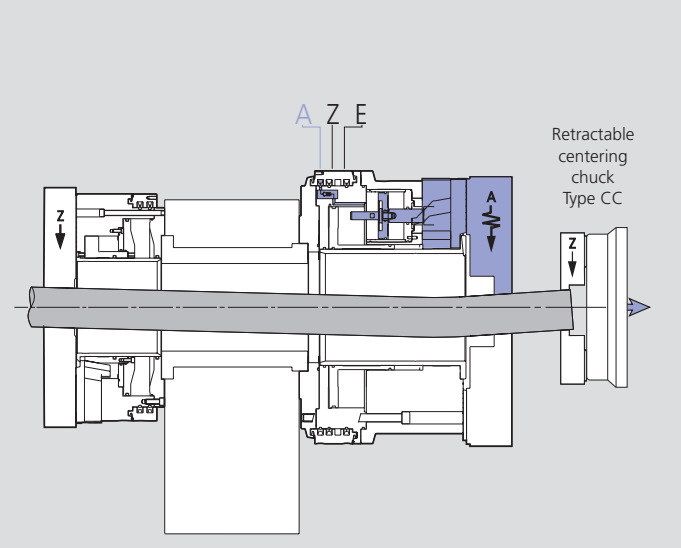

Compensating clamping

Technical data

SMW-AUTOBLOK Type		BB-AZ2G 685-275	BB-AZ2G 740-330	BB-AZ2G 800-390	BB-AZ2G 1000-560
Through-hole	mm (inch)	275 (10.83")	330 (13")	390 (15.35")	560 (22.05")
Total stroke per jaw	mm (inch)	38.1 (1 1/2")	38.1 (1 1/2")	38.1 (1 1/2")	38.1 (1 1/2")
Rapid stroke per jaw*	mm (inch)	28.7 (1.13")	28.7 (1.13")	28.7 (1.13")	28.7 (1.13")
Clamping stroke per jaw	mm (inch)	9.4 (0.37")	9.4 (0.37")	9.4 (0.37")	9.4 (0.37")
Operating pressure min./max.	bar (psi)	2/10 (29/145)	2/10 (29/145)	2/10 (29/145)	2/10 (29/145)
Piston area	cm^2	1333	1344	1505	1570
Gripping force at 6 bar self centering	kN (lbf)	160 (35969)	160 (35969)	180 (40466)	180 (40466)
Gripping force at 6 bar compensating	kN (lbf)	90 (20233)	90 (20233)	90 (20233)	90 (20233)
Max. speed	r.p.m.	1000	850	750	500
Air consumption/jaw stroke at 6 bar					
Centering	liter	57	57	63	66
Compensating	liter	72	71	76	76
Open	liter	27	27	27	27
Weight (without top jaws)	kg (lbs)	800 (1764)	875 (1929)	1000 (2204)	1420 (3131)
Moment of inertia	$kg \cdot m^2$	51.5	68.4	90.5	221.4
Compensating stroke	mm (inch)	+/- 3.5 (0.14")	+/- 3.5 (0.14")	+/- 3.5 (0.14")	+/- 3.5 (0.14")

* Could not be used for clamping

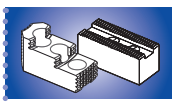

SMW-AUTOBLOK 290

BIG BORE® BB-AZ2G

INCH SERRATION

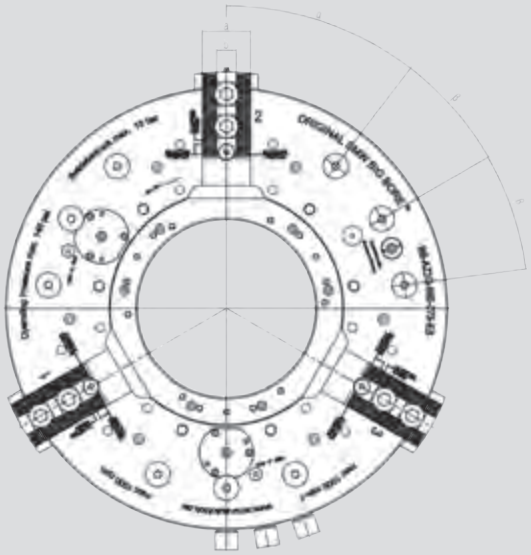

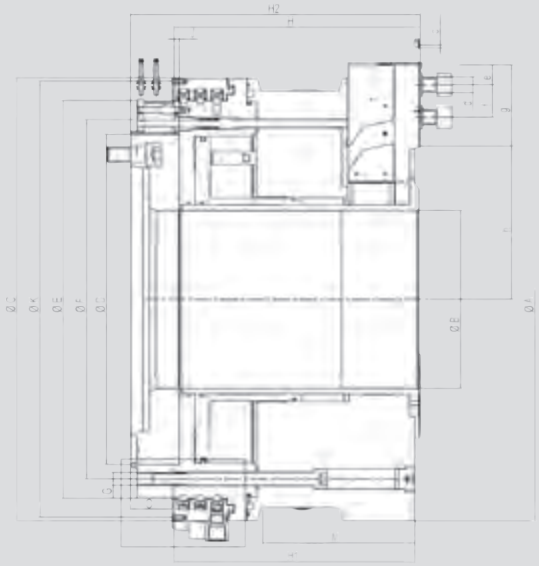

BB-AZ2G 1000-560

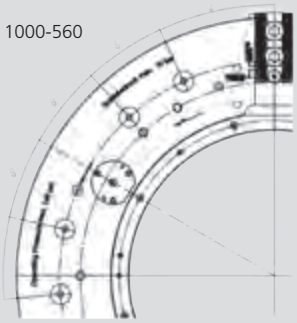

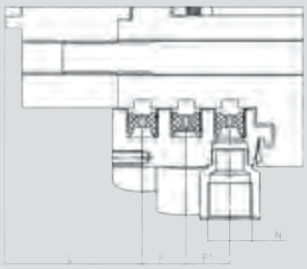

Subject to technical changes.
For more detailed information please ask our customer service.

All hoses must be min. 3/4" I.D.

SMW-AUTOBLOK Type			BB-AZ2G 685-275	BB-AZ2G 740-330	BB-AZ2G 800-390	BB-AZ2G 1000-560
Id. No.			**054198**	**054308**	**054199**	**054230**
Mounting			**A20**	**A20**	**A20**	**A28**
Chuck diameter	**A**	mm	685	740	800	1000
Through hole	**B**	mm	275	330	390	560
	C	mm	685	740	775	970
	D H6	mm	510	510	590	590
	E	mm	615	669	705	705
Fixing bolts circle	**F**	mm	555	610	640	640
	G	mm	M20	M20	M20	M20
	H	mm	380.5	380.5	380.5	380.5
	H1	mm	372	372	379	375.5
Chuck height	**H2**	mm	448	448	448	448
	J	mm	8	8	8	8
Thread circle 12 x M8	**K**	mm	674	729	755	950
	L	mm	82	82	82	82
	M	mm	235	n.a.	n.a.	n.a.
Connection for air hoses	**N**	inch	G 3/4"	G 3/4"	G 3/4"	G 3/4"
	O	mm	64	64	60.5	64
	P	mm	26	26	26	26
	P1	mm	26	26	26	26
	a	mm	75	75	75	75
	b	mm	30	30	30	30
Serration	**c**	inch	3/32" x 90°	3/32" x 90°	3/32" x 90°	3/32" x 90°
Bolt ISO 4762 12.9	**d**	mm	M24	M24	M24	M24
Min.	**e**	mm	25	25	25	25
T-nuts distance min./max.	**f**	mm	36/88	36/88	36/88	36/88
Serration length	**g**	mm	125	125	125	125
Min./max.	**h**	mm	199/237.1	227.8/265.9	258.3/295.4	340.2/378.3
	α	deg.	37.5	37.5	37.5	25.0
	β	deg.	22.5	22.5	22.5	17.5

BIG BORE® BB-FZA2G

INCH SERRATION

Front-end pneumatic 6-jaw sequence chucks EXTRA large through hole Ø 275 - 390 mm

- Chuck size 740 - 920
- 3 integrated centering jaws and 3 compensating jaws

Application/customer benefits

- Extra long axial and radial stroke for centering jaws
- Adjustability of the axial centering position for pipe threading
- Extra long rapid and clamping stroke (1 1/2" total) for compensating jaws
- Stroke control for centering jaws
- Stroke control for each compensating jaw
- Pressure control

Technical features

- 3+3 jaw air chuck with 3 integrated centering jaws and 3 compensating jaws
- Integrated centering jaws move axially forward to center the pipe exactly at the area to be threaded
- For external clamping only
- Fully automatic sequence is programmable
- Extra long jaw stroke
- It is possible to adjust the axial centering position through the radial position of the centering jaws

Machining of bent pipe with chuck with integrated centering jaws:

1

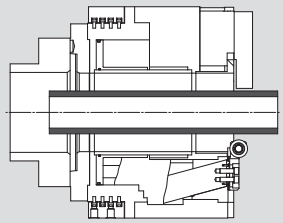

Chuck open, load pipe.

2

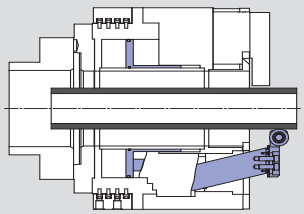

Centering jaws move forward axially to center the pipe at the threading area.

3

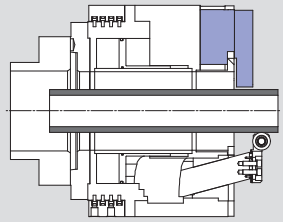

Compensating jaws pick up the pipe at the centered position.

4

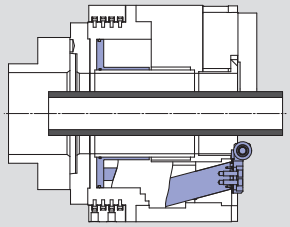

Centering jaws open and retract back axially into the chuck body. The pipe can now be machined.

Adjustability of the axial centering position

By changing the radial position of the top jaws, the axial centering position can be changed.
The axial centering position is dependent from the radial adjustment of the top jaws.

A Short stroke (a)

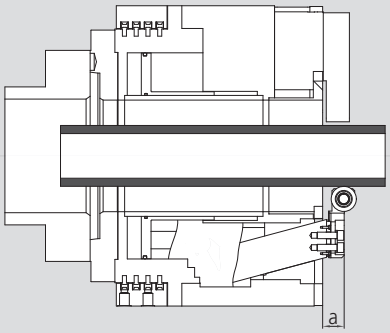

Axial centering position and radial position of the top jaws.

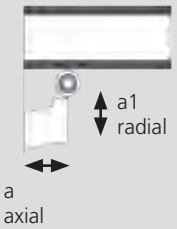

B Mid stroke (b)

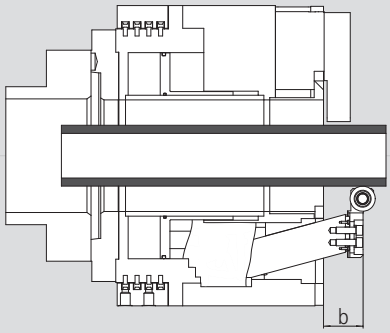

Axial centering position and radial position of the top jaws.

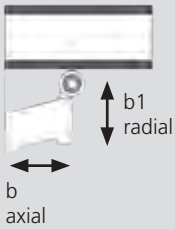

C Max stroke (c)

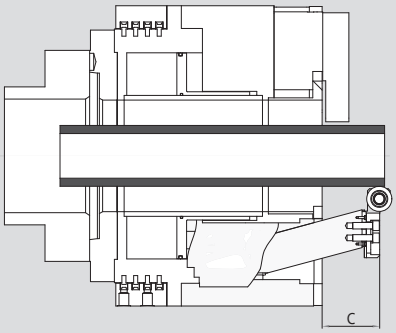

Axial centering position and radial position of the top jaws.

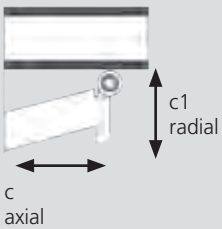

BIG BORE® BB-FZA2G

INCH SERRATION

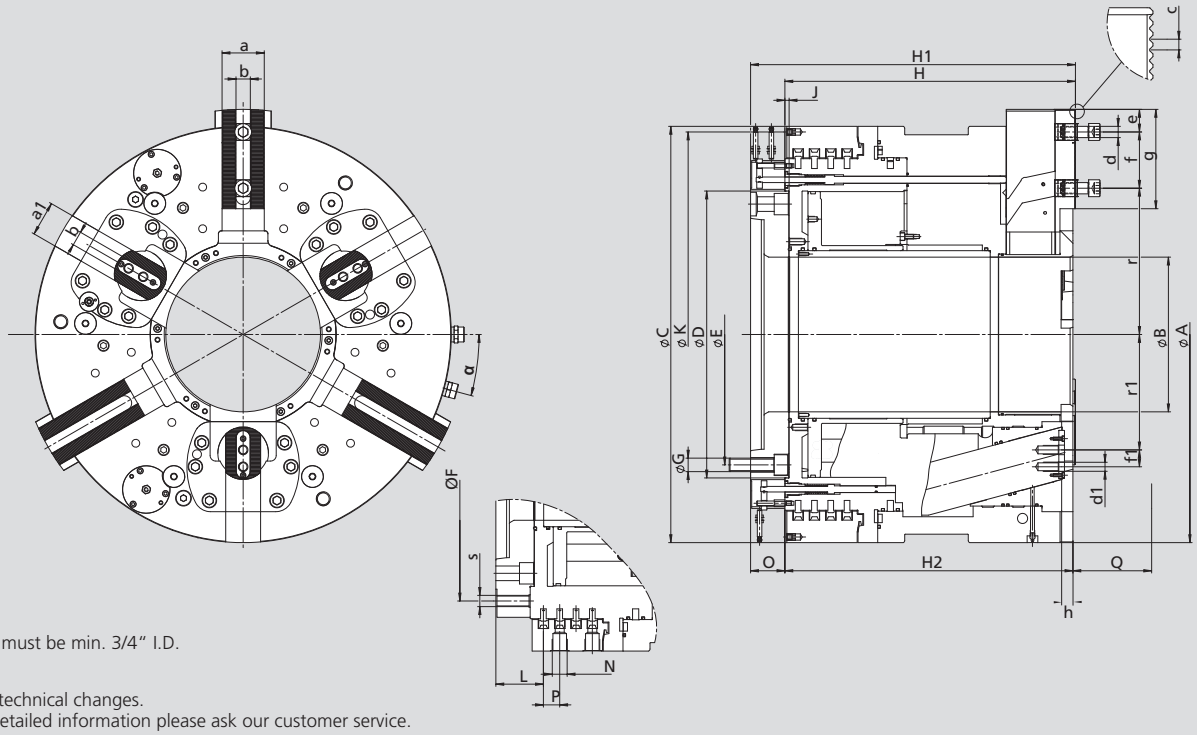

* all hoses must be min. 3/4" I.D.

Subject to technical changes.
For more detailed information please ask our customer service.

SMW-AUTOBLOK Type			BB-FZA2G 740-275-A20	BB-FZA2G 800-330-A20	BB-FZA2G 920-390-A20
Id. No.			**054159**	**054300**	**054228**
Chuck diameter	**A**	mm	740	800	920
Through hole	**B**	mm	275	330	390
	C	mm	740	800	920
	D	mm	510	510	550
	E	mm	463.6	463.6	463,5
	F	mm	562	615	724
	G	mm	M24	M24	M24
	H	mm	516.5	516.5	546.5
Chuck height	**H1**	mm	577.5	577.5	607.5
	H2	mm	512	512	542
	J	mm	7.5	7.5	7.5
	K	mm	720/6xM8	780/6xM8	890/6xM8
	L	mm	84.5	84.5	86.5
Connection for air hoses	**N**	inch	G 3/4"	G3/4"	G 3/4"
	O	mm	61	61	61
	P	mm	3x29	3x29	3x31
Centering jaws axial stroke	**Q**	mm	140	140	160
	a	mm	75	75	75
	a1	mm	62	62	62
	b	mm	25.5 H7	25.5 H7	25.5 H7
	c	inch	3/32" x 90°	3/32" x 90°	3/32" x 90°
Jaw mounting bolts	**d**	mm	M20	M20	M20
Jaw mounting bolts	**d1**	mm	M16	M16	M16
Min.	**e**	mm	30	30	30
Max.	**f**	mm	100	100	135
	f1	mm	30	30	30
	g	mm	176.6	176.6	190
Serration to face of chuck	**h**	mm	19	19	19
	r	mm	260	287.5	321
	r1	mm	205.2	232.7	270.3
	s	mm	M20	M20	M24
	α	deg.	15	15	15
Speed max.		r.p.m.	900	750	600
Gripping force compensating jaws at 6 bar		kN (lbf)	83 (18660)	83 (18660)	137 (30799)
Gripping force centering jaws at 6 bar		kN (lbf)	100 (22481)	114 (25628)	102 (22930)
Jaw stroke compensating jaws total		mm (inch)	38.1 (1 1/2")	38.1 (1 1/2")	38.1 (1 1/2")
Rapid stroke		mm (inch)	27.2 (1.07")	27.2 (1.07")	27.2 (1.07")
Clamping stroke		mm (inch)	10.9 (0.43")	10.9 (0.43")	10.9 (0.43")
Jaw stroke centering jaws max.		mm (inch)	37.5 (1.48")	37.5 (1.48")	42.7 (1.68")
Air consumption centering at 6 bar (87psi) max.		liter	92	92	142
Air consumption compensating at 6 bar (87psi) max.		liter	30	30	54
Weight (without top jaws)		kg (lbs)	1140 (2513)	1350 (2976)	1850 (4079)
Operating pressure min./max.		bar (psi)	2/8 (29/116)	2/8 (29/116)	2/8 (29/116)
Moment of inertia		kg·m²	88	121	230

BIG BORE®
BB-EXL-SC2G

INCH SERRATION

Front-end spring clamp power chucks
EXTRA large through hole Ø 191 - 390 mm

- Chuck size 510 - 900
- Clamping with gas spring
- Extra long rapid and clamping stroke

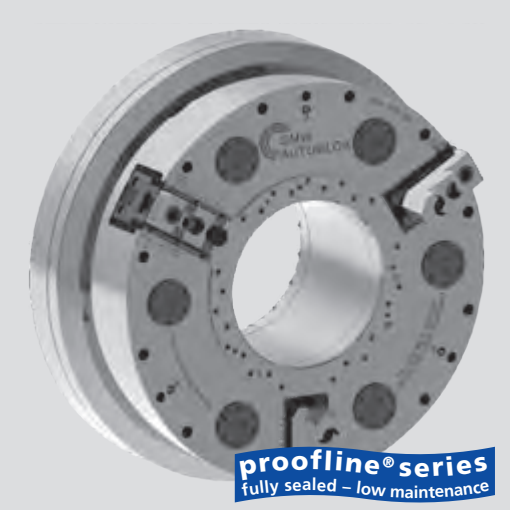

Application/customer benefits

- End machining of long pipe/self centering clamping
- Highest productivity/open and clamp time < 3 sec.
- Low maintenance = high availability of the machine
- Step mode for partial opening/clamping for shimming
- Full spindle bore can be used

Technical features

- Self centering clamping with either 9/6/3 gas spring
- Opening via integrated cylinder
- Permanent grease lubricated for constant grip force
- Long jaw stroke with rapid and clamping stroke
- Low air consumption
- Stroke control
- **proofline® chucks** = fully sealed – low maintenance

Standard equipment

Chuck with mounting bolts
1 set of soft top jaws
1 set of T-nuts and bolts

Ordering example

Big Bore BB-EXL-SC2G 900-390
Id. No. 77784388

Accessories

Air control

The reliable principle: Clamping via spring/opening via air cylinder

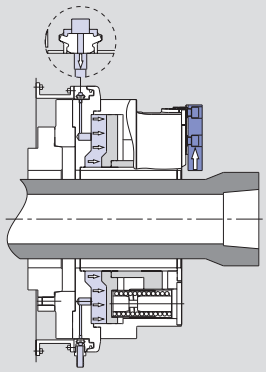

Fig. 1
Chuck open (only at stopped spindle).
The SMW profile seal collapses radial under the air pressure and seals against the chuck body.
The cylinder chamber is filled.
The piston is compressing the springs, the jaws open.

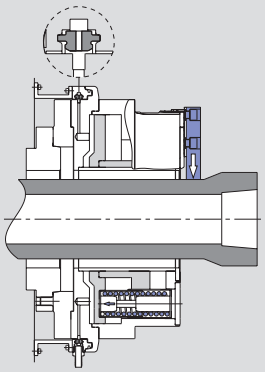

Fig. 2
The SMW profile seal lifts off the chuck body due to elastic force. The springs expand and transmit their force onto the jaws via the wedge hook drive. The spindle can rotate.

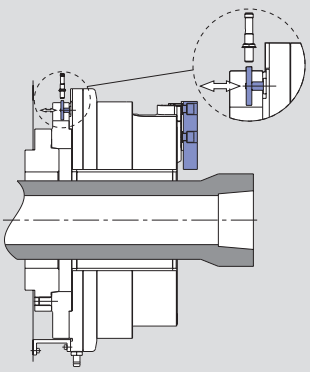

Fig. 3
Stroke control.
The position of the jaws can be monitored via a mechanical cam by 1 or 2 proximity switches.

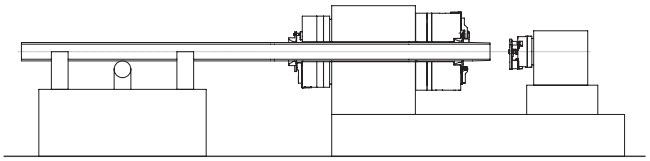

End machining of tubes with front and rear chucks

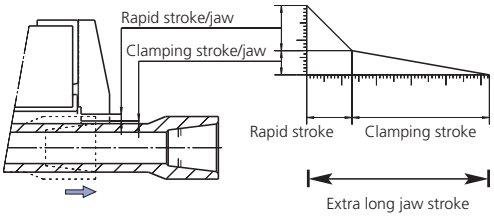

Technical data

SMW-AUTOBLOK Type		BB-EXL-SC2G 510-191			BB-EXL-SC2G 660-280			BB-EXL-SC2G 900-390		
Id. No.		**77784353**			**77784366**			**77784388**		
Chuck trough hole	mm (inch)	191 (7.52”)			280 (11.02”)			390 (15.35”)		
Total stroke per jaw	mm (inch)	38.5 (1.52”)			38.5 (1.52”)			38.5 (1.52”)		
Rapid stroke per jaw*	mm (inch)	30 (1.18”)			30 (1.18”)			30 (1.18”)		
Clamping stroke per jaw	mm (inch)	8.5 (0.33”)			8.5 (0.33”)			8.5 (0.33”)		
Opening pressure with all springs	bar (psi)	5 (73)			5 (73)			5 (73)		
Max. gripping force at 3/6/9 springs	kN (lbf)	57 (12814)	114 (25628)	-	82 (18434)	164 (36869)	-	82 (18434)	164 (36869)	245 (55078)
Max. speed	r.p.m.	1100			1000			680		
Air consumption to open at 5 bar (73 psi)	liter	37			92			125		
Weight (without top jaws)	kg (lbs)	318 (701)			500 (1102)			950 (2094)		
Moment of inertia	kg·m²	14			36			117		

* Could not be used for clamping

SMW-AUTOBLOK 305

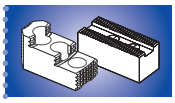

SMW-AUTOBLOK 298

Main dimensions and technical data

Opening pressure with all springs mounted
min. 5 bar, max. 8 bar

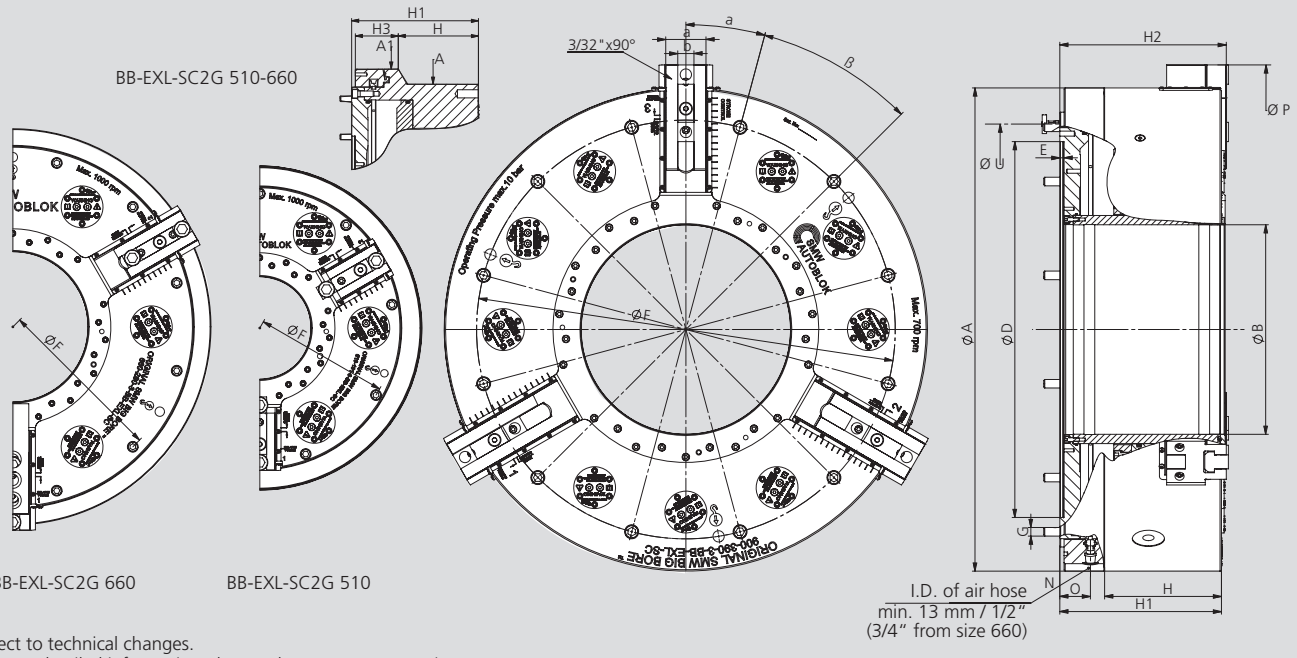

Subject to technical changes.
For more detailed information please ask our customer service.

SMW-AUTOBLOK Type			BB-EXL-SC2G 510-191	BB-EXL-SC2G 660-280	BB-EXL-SC2G 900-390
Mounting			**Z310**	**Z450**	**Z700**
	A	mm	532	673	900
Through hole	**A1**	mm	610	738	-
	B	mm	191	280	390
	D H6	mm	310	450	700
	E	mm	8	8	8
	F	mm	502	632	780
	G	mm	M12 (9x)	M12 (12x)	M16 (12x)
	H	mm	170	152	215
	H1	mm	272	272	301
	H2	mm	279	279	310
	N	inch	G 1/2"	G 1/2"	G 1/2"
	O	mm	47	47	57
Max. swing	**P**	mm	604	760	986
	a	mm	57	62	75
	b	mm	25.5	25.5	30
	α	mm	20	15	15
	β	deg.	9x40°	12x30°	12x30°
	U	deg.	414	554	765
Rapid stroke		mm	30	30	30
Clamping stroke		mm	8.5	8.5	8.5
Total clamping stroke		mm	38.5	38.5	38.5

Spindle-Adapters

Spindle-Adapters
ISO-A DIN 55026

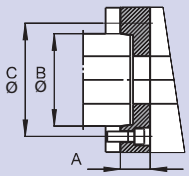

SMW-AUTOBLOK Type	BB-EXL-SC2G 510-191			BB-EXL-SC2G 660-280			BB-EXL-SC2G 900-390	
Spindle nose	**A11**	**A15**	**A20**	**A11**	**A15**	**A20**	**A15**	**A20**
Id. No.	24115130	24125130	24175130	24116630	24126630	24176630	24128830	24178830

CC

INCH
SERRATION

Stationary centering and dampening chuck, pneumatic Ø 240 - 470 mm

■ With integrated dampener

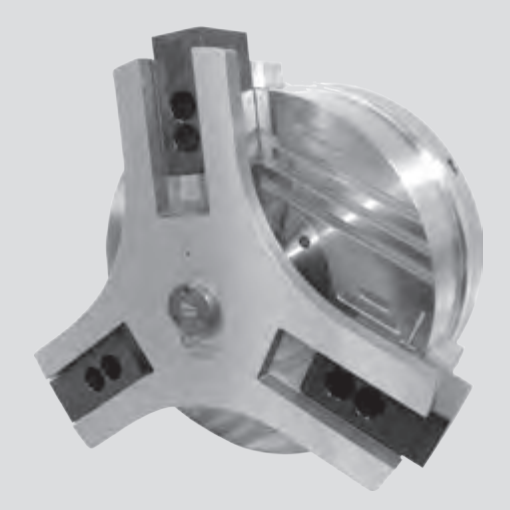

Application/customer benefits

- Axial positioning and centering of tubes when a BB-AZ2G chuck on the main spindle is used in compensating clamping mode
- Integrated hydraulic dampener with fixed and position for controlled decelaration and positioning of tubes
- Suitable for O.D. and I.D. centering

Technical features

- Stationary pneumatic clamping unit with integrated dampener/endstop
- Operating pressure 2-10 bar (29-145 psi)
- Monitoring of endposition of the axial stop via prox. switch (prox. switch not included with the chuck)

Standard equipment

3-jaw centering chuck
1 set of soft top jaws

Ordering example

Stationary centering chuck CC-350

* Chuck CC-240 has no ring

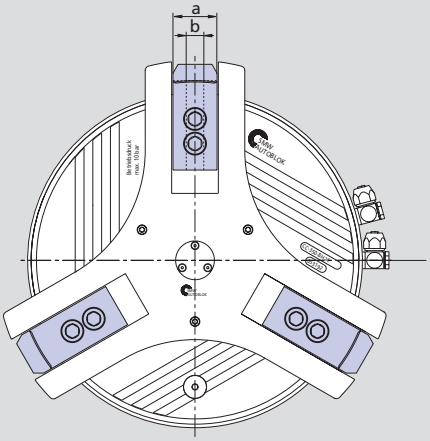

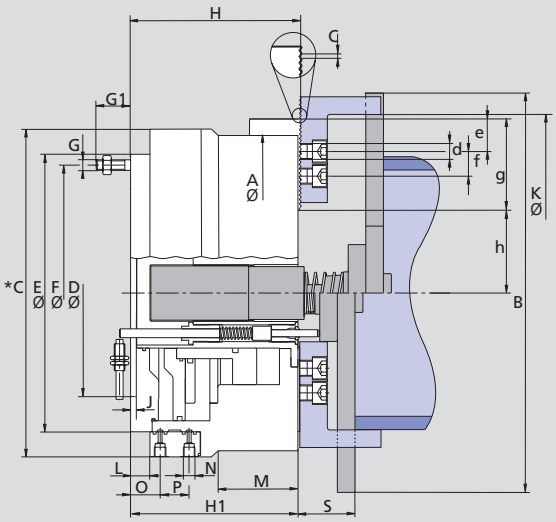

Subject to technical changes.
For more detailed information please ask our customer service.

SMW-AUTOBLOK Type			CC 240 Z	CC 350 Z	CC 470 Z
Id. No.			**053290**	**053192**	**054470**
	A	mm	240	360	470
	B	mm	306	446	550
	C	mm	250	372	n.a.
	D H6	mm	195	235	310
	E	mm		315	400
	F	mm	223.8	290.5	374
	G/G1	mm	M12/39	M12/39	M12/26
	H	mm	135.5	191.5	239.5
	H1	mm	134	190	238
	J	mm	6.5	6.5	8
Clamping Ø max.	**K**	mm	245	365	507
	L	mm	–	21	20
	M	mm	49	92	n.a.
Pneumatic connection	**N**	inch	G 1/4"	G 1/4"	G 1/2"
Min./max.	**S**	mm	45/95	47/97	50.5/152.5
	a	mm	40	44	60
	o	mm	74	33	37
	p	mm	–	33	26
	b f7	mm	17	21	25.5
Serration	**c**	inch	1/16" x 90°	1/16" x 90°	3/32" x 90°
Bolts ISO 4762 12.9	**d**	mm	M12 x 30	M16 x 35	M20 x 45
Min.	**e**	mm	9.5	12	15
T-nut distance min./max.	**f**	mm	22/41.5	25/72	35/68
Length of serration	**g**	mm	59	95	99
Min./max.	**h**	mm	53/66	85/109	128/153
Stroke/jaw		mm (inch)	12.7 (0.5")	24 (0.94")	25 (0.98")
Pressure min./max.		bar (psi)	2/10 (29/145)	2/10 (29/145)	2/10 (29/145)
Piston area		cm²	290	486	652
Air consumption/jaw stroke at 6 bar		liter	5.5	13.5	21
Weight (without top jaws)		kg (lbs)	53 (11915)	115 (25853)	260 (58450)

CC

INCH
SERRATION

MWB-D | MAB-D
Soft top jaws

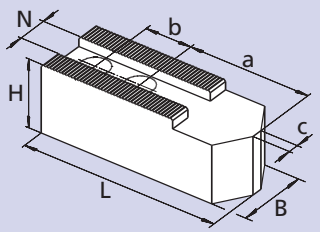

Chuck Type	CC 240 Z	CC 350 Z	CC 470 Z
Jaw type	MWB-D 240	MWB-D 250	MAB-D 2505
Jaw Id. No. (set)	233462	013491	081603
B	40	50	60
H	80	80	120
L	90	120	155
N	17	21	25.5
Serration	1/16” x 90°	1/16” x 90°	3/32” x 90°
a	20	62	94
b	22	28	35
kg/set	4.2	10.5	21.5

NST
T-nuts

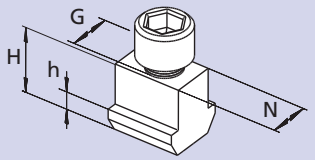

Chuck Type	CC 240 Z	CC 350 Z	CC 470 Z
T-nut type	NST 17-4	NST 21-5	NST 21-5
T-nut Id. No./piece	013864	033429	014812
N	17	21	25.5
H	26.5	30	29
h	9.5	11	11
G	M12	M16	M20
Bolt ISO 4762 12.9	M12 x 30	M16 x 35	M20 x 40

JAWS-CATALOG
Request or download: www.smw-autoblok.de

AC-BB

Control unit for
SP and Big Bore chucks

- Electronic safety control unit
- For SP and Big Bore chucks
- Without pressure control
- Without stroke control

Electropneumatic control unit for SP and Big Bore® chucks

- 1/2" or 3/4" design for SP and Big Bore chucks
- Actuation via foot pedal or push botton (not included in the supply range)
- Clamping control via air flow sensors
- Quick chuck actuation via diaphragm valves with quick exhaust
- Airflow control with LED for ready and air flow. Adjustable air flow sensor sensitivity

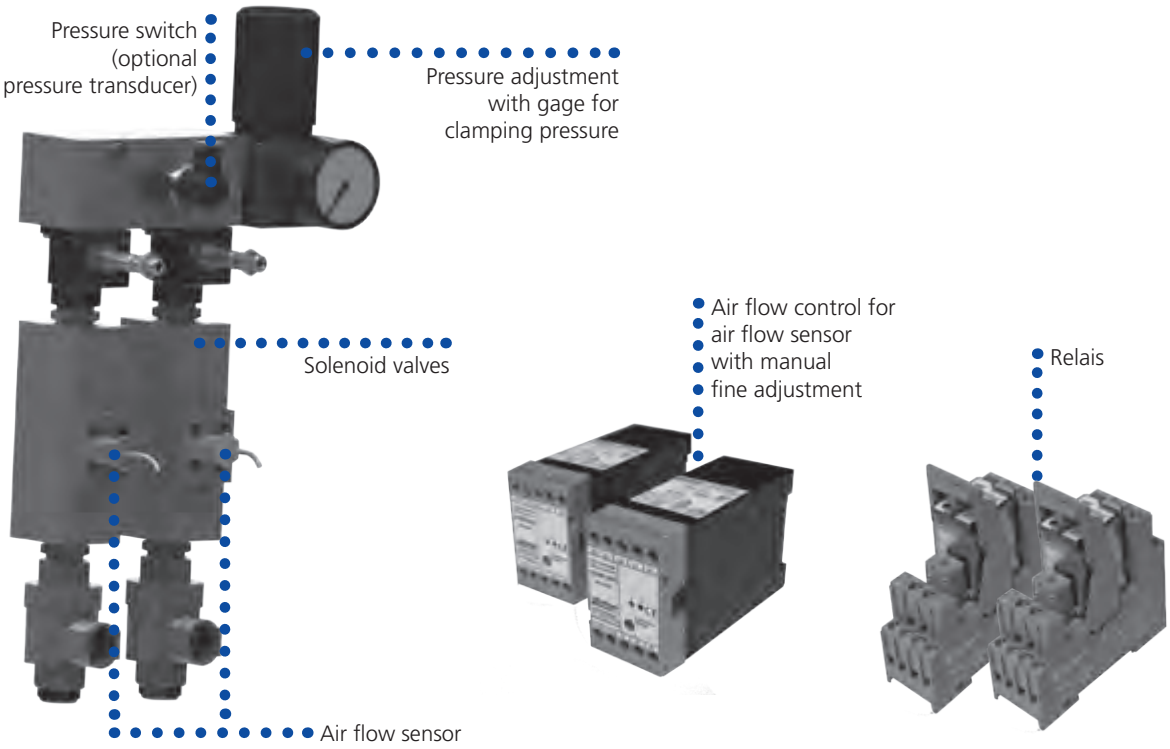

SMW-AUTOBLOK Type	Voltage	Size	Id. No.
AC-BB	24 V	1/2"	202342
AC-BB	110 V	1/2"	202343
AC-BB	220 V	1/2"	202344
AC-BB	24 V	3/4"	202837
AC-BB	110 V	3/4"	202838
AC-BB	220 V	3/4"	202839

Standard equipment:

as shown, without hoses and fittings

Approx. dimensions (w x h x d)
222 x 465 x 128 mm

Accessories:

Foot pedal F2 with 4 m cable
Id. No. 013324

Push button with 5 m cable
Id. No. 192942

Air service unit
Id. No. 1/2" 192074,
Id. No. 3/4" 199790

Pneumatic diagram AC-BB

⚠ Size of all pneumatic lines min. 1/2" or 3/4"

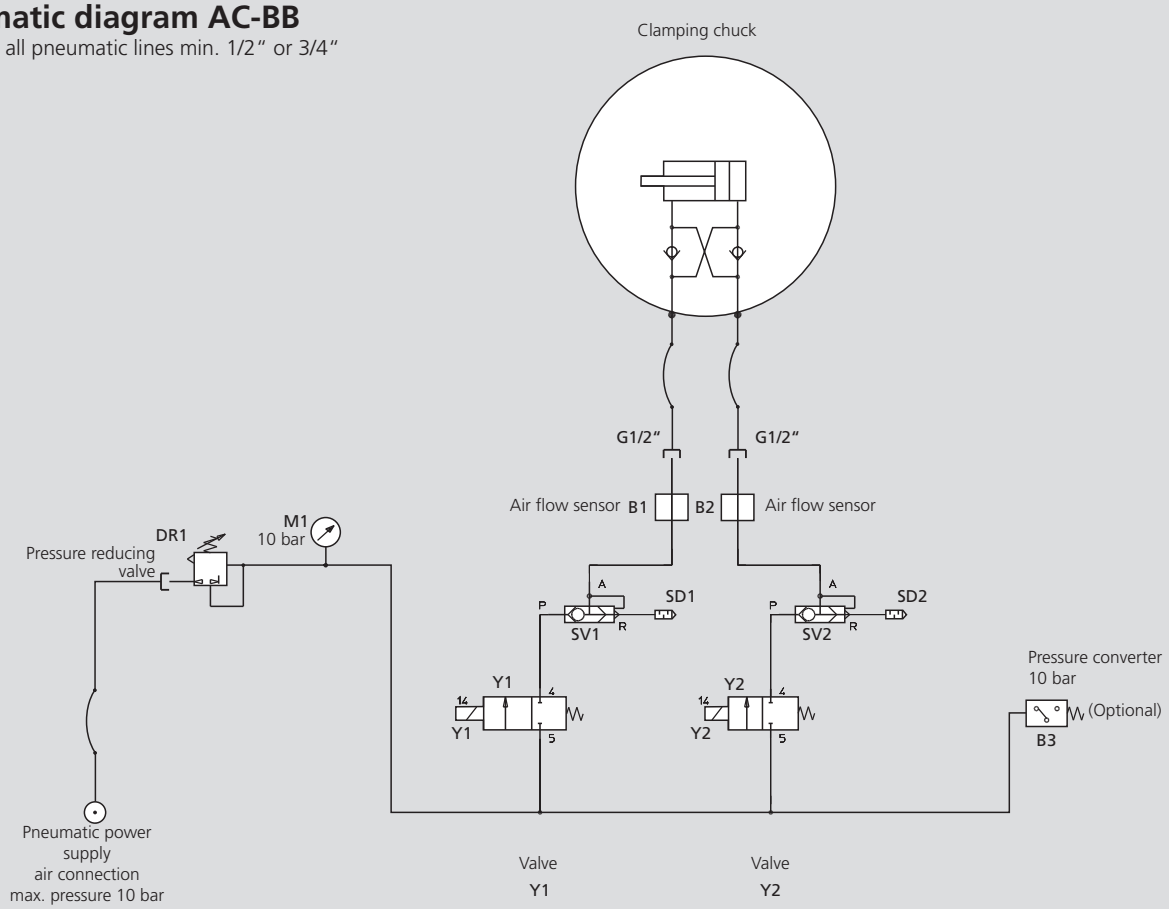

Wiring diagram AC-BB

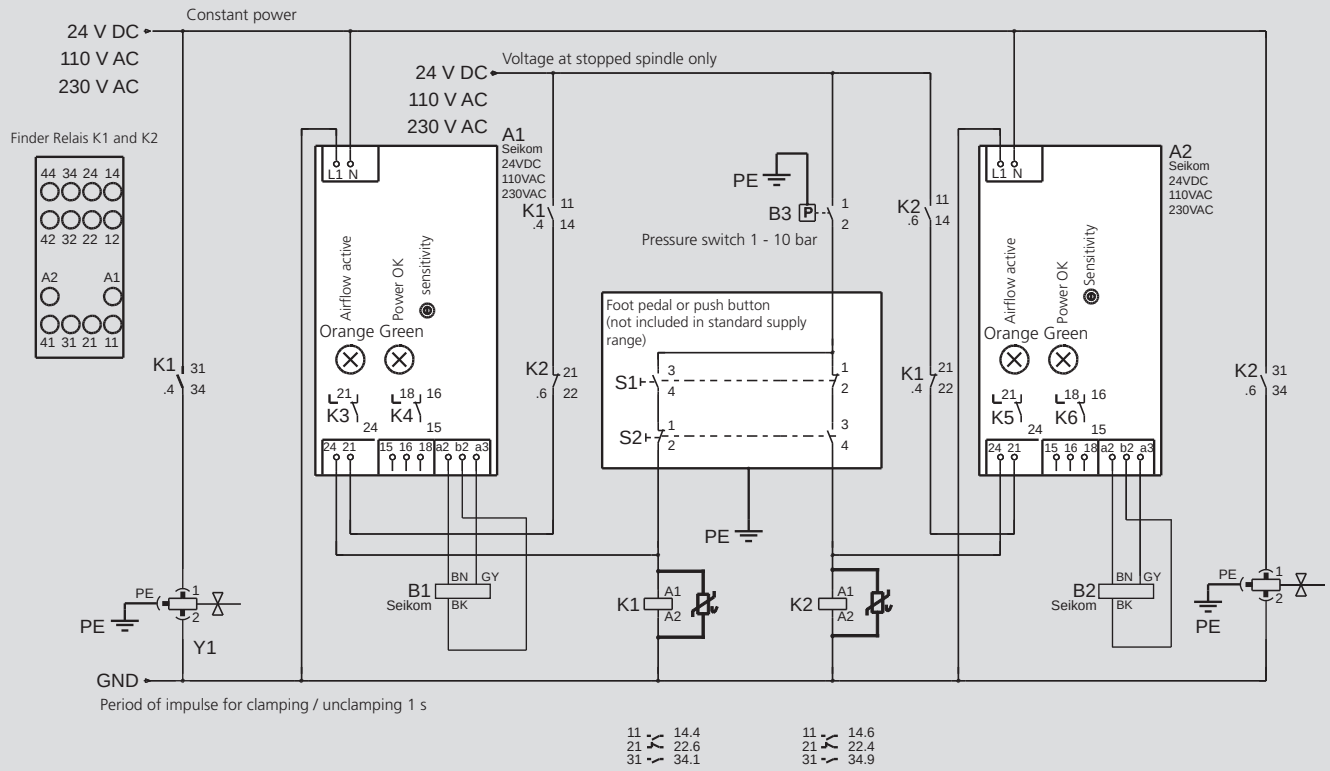

AC-XN

Control unit
for pneumatic chucks

- Electronic safety control unit
- For Big Bore chucks
- Proximity switch for pressure and stroke control signals

Universal, electronic micro-processor compact control unit for Big Bore chucks in 1/2”/ 3/4” design

- All safety systems integrated
- Easy installation - no other devices needed
- Can be connected to all common voltages
- LCD display in English
- Quick chuck actuation by 1/2” / 3/4” pneumatic parts
- To be actuated by an external signal

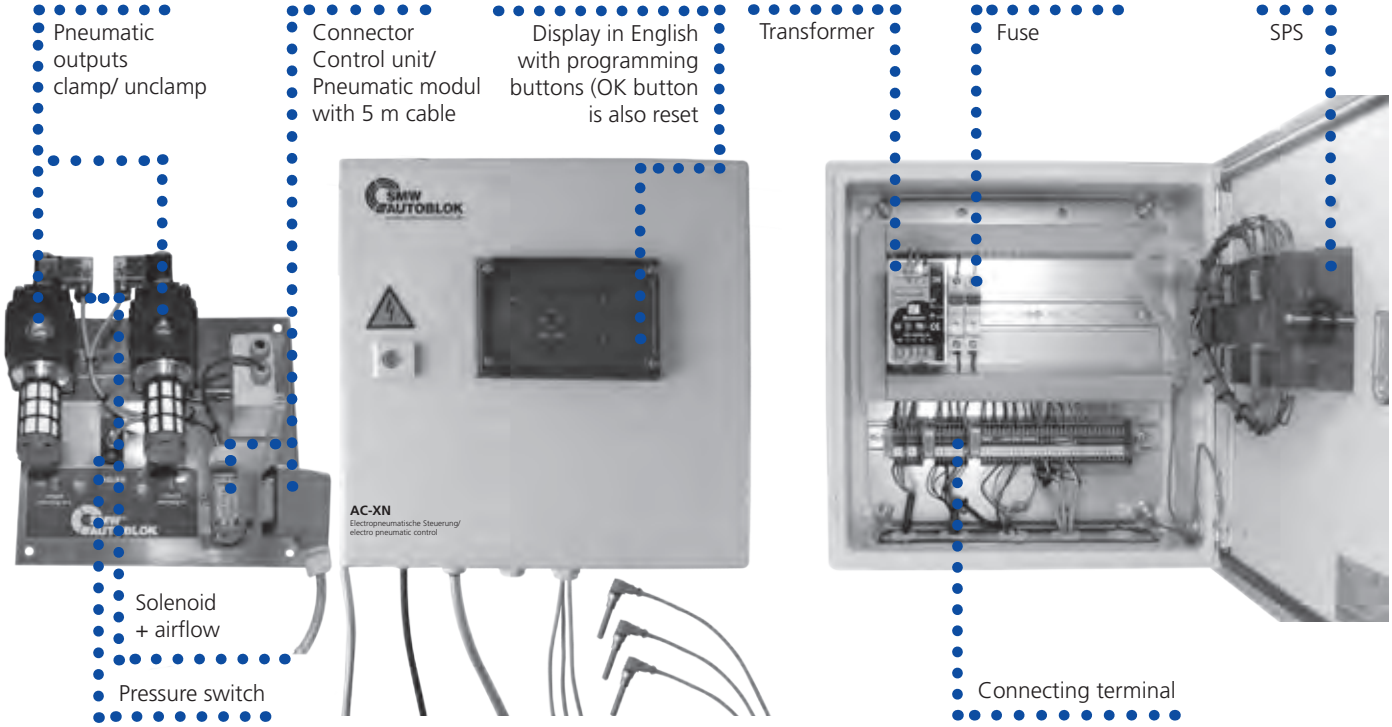

Accessories:

Foot pedal F2
with 4 m cabel
Id. No. 013324

Proximity switch for pressure and stroke control signals M8x1
Id. No. 203500

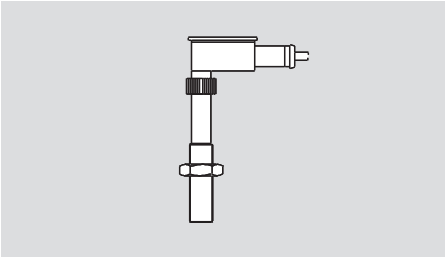

Air service unit 1/2”
Id. No. 192074
Air service unit 3/4”
Id. No. 199790

Order review:

Control unit AC-XN complete 1/2”	Id. No. 203491
Control unit AC-XN complete 3/4”	Id. No. 203490

Standard equipment:

Control unit
WxHxD = 380 x 380 x 220 mm

Pneumatic module 1/2” or 3/4”
WxHxD = 300 x 300 x 130 mm

3 pcs. Proximity switch M8x1
(Id. No. 203500) included

Electric connection AC-XN

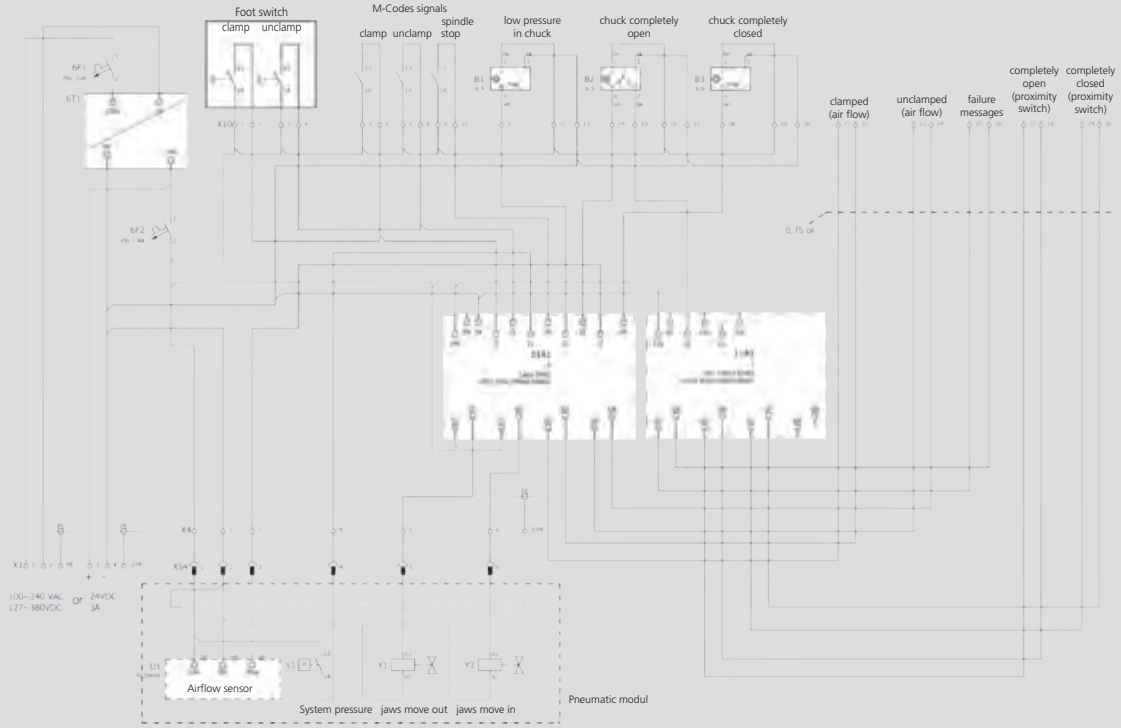

Electric diagram AC-XN

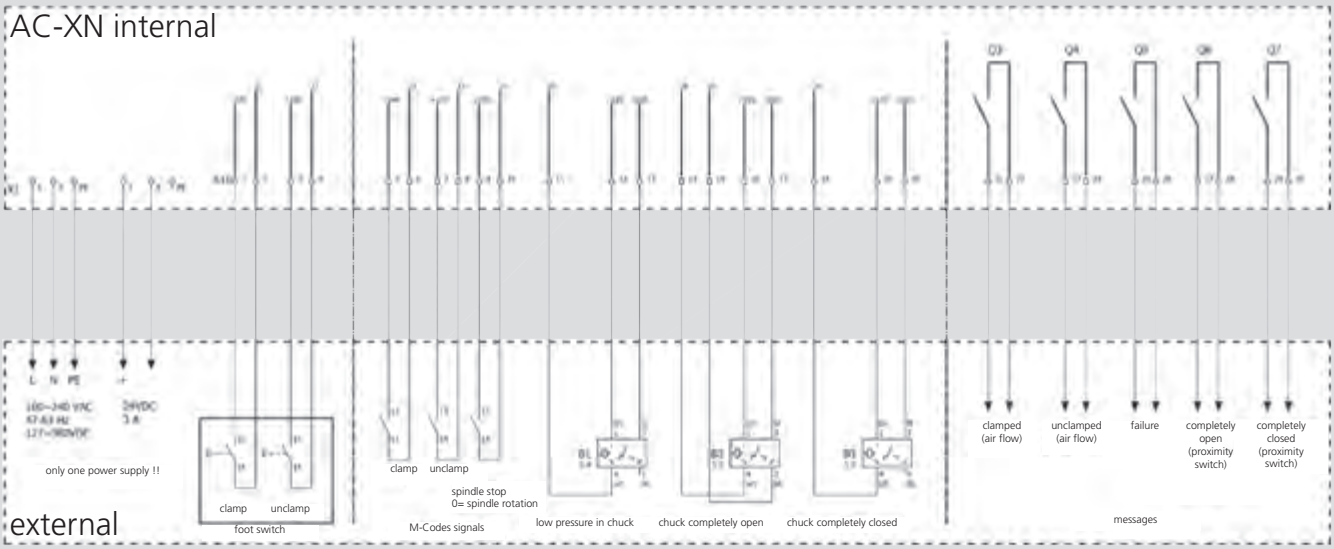

Pneumatic diagram AC-XN

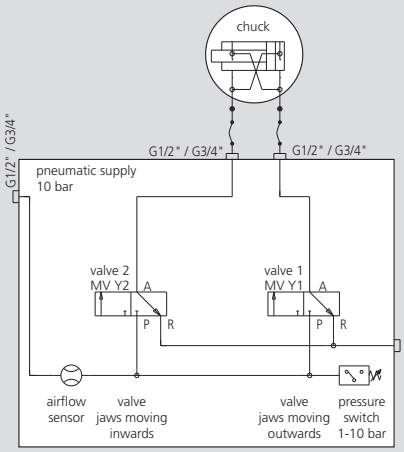

SF-RZ

2 Position hydraulic ring indexing chuck

- 3 self-centering jaws
- Large evacuation windows for easy chip flow
- Fully automatic and controlled indexing

Application/customer benefits

- Machining of couplings up to 5 1/2" in one set up
- Indexing 180°
- 3 self centering jaws external clamping
- Compact design and light weight
- Standard mounting for easy retrofit on existing machines

Technical features

- Hydraulic operated, automatic ring indexing chuck
- All functions controlled by proximity switches
- Extremly accurate and rigid indexing mechanism
- Optional: pendulum clamping inserts, central coolant supply

Standard equipment

Chuck with mounting bolts

Ordering example

SF-RZ 400

Accessories

7-way oil distributor
Connection kit for coolant supply

MDV 65 7-way oil distributor

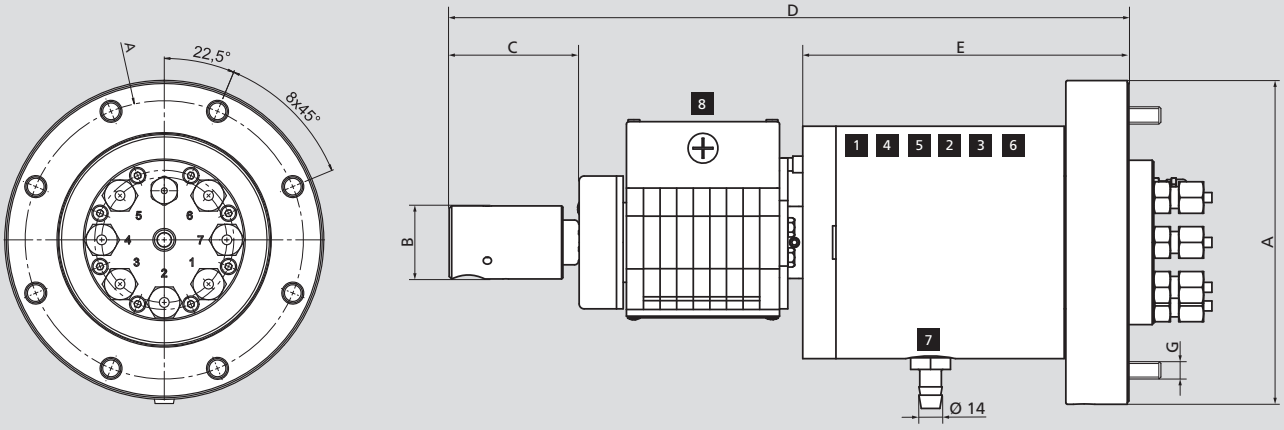

Connections:

1 indexing position 180°
2 indexing position 0°
3 locking the indexing ring
4 unlocking the indexing ring
5 jaws clamp
6 jaws unclamp
7 leckage oil
8 electrical control wires

Subject to technical changes.
For more detailed information please ask our customer service.

SMW-AUTOBLOK Type		MDV 65
Id. No.		045920
A	mm	195
B	mm	44
C	mm	78.3
D	mm	331.2
E	mm	196.5
F	mm	170
G	mm	8xM12
Max. speed	r.p.m.	1400
Weight	kg	28

For exact position of the connecting ports, please ask for a customer drawing.
All ports (1-6) are G 3/8".

SF-RZ

Main dimensions and technical data

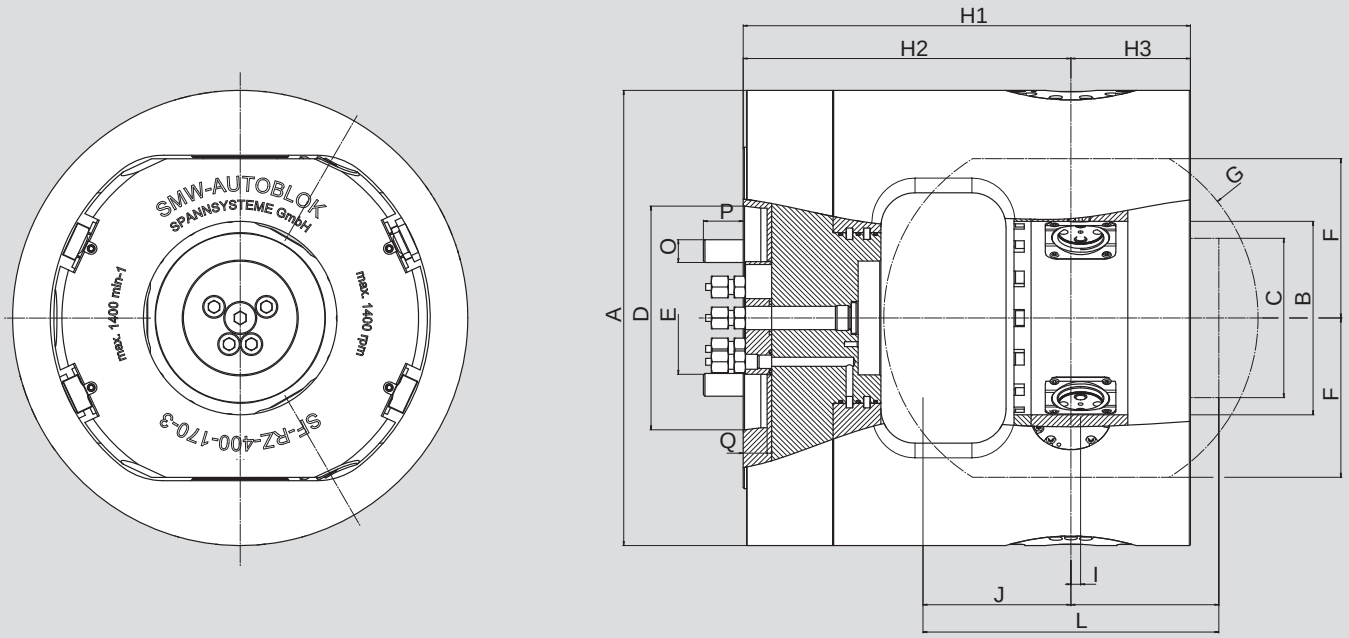

Subject to technical changes.
For more detailed information please ask our customer service.

SMW-AUTOBLOK Type			SF-RZ 400
Id. No.			**054394**
Chuck O.D.	**A**	mm	400
Indexing ring I.D.	**B**	mm	170
Max. workpiece O.D.	**C**	mm	140
Spindle mounting	**D**		A11
Connection flange O.D.	**E**	mm	99
Height indexing ring	**F**	mm	140
Swing indexing ring	**G**	mm	329
	H_1	mm	393
	H_2	mm	288
Indexing axis	**H_3**	mm	105
Jaw axis to indexing axis	**I**	mm	8.5
	K	mm	130
Max. length of workpiece	**L**	mm	260
Clamping stroke	**M**	mm	5.7
Mounting bolts	**O**	mm	M20
	P	mm	35
	Q	mm	21
Max. speed		r.p.m.	1400
Max. pressure		bar	50
Max. clamping force		kN	120
Weight		kg	225
Moment of inertia		kg·m²	6

SF-RAZ

TONGUE & GROOVE

2 Position hydraulic ring indexing chuck

- 3 self centering and 3 compensating jaws
- Large evacuation windows for easy chip flow
- Fully automatic and controlled indexing
- Hydraulic actuation

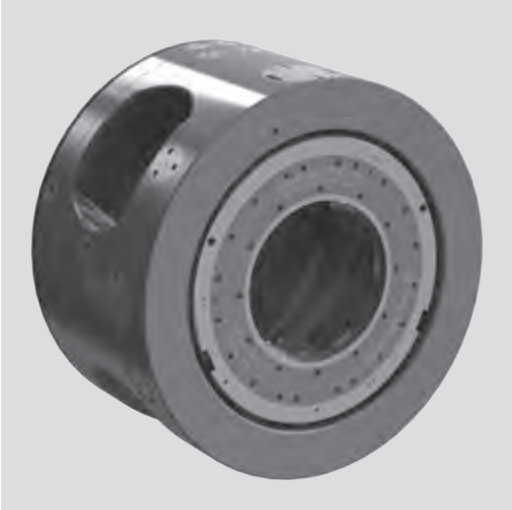

Application/customer benefits

- Machining of couplings in one set up
- Indexing 180° in 2 seconds
- 6 jaw clamping for perfect roundness of the coupling = ideal for premium threads
- High-Low clamping (roughing-finishing)

Technical features

- Hydraulic, automatic ring indexing chuck
- All functions controlled by proximity switches
- Extremly accurate and rigid indexing mechanism
- For external clamping only
- Automatic central lubrication

Standard equipment

Chuck with mounting bolts

Ordering example

SF-RAZ 950-3+3 A 20

Accessories

Hydraulic manifold including electric manifold, hose kit

Machining of a coupling in 1 set up:

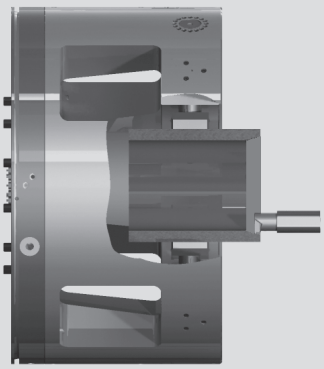

Fig. 1
Clamping the coupling on the outside diameter with 6 jaws (3 self centering and 3 compensating jaws) and machining the thread on side 1.

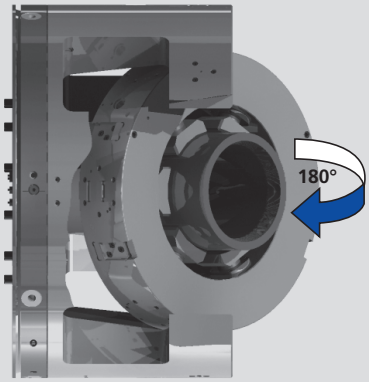

Fig. 2
Indexing the chuck 180° with the coupling remaining clamped.

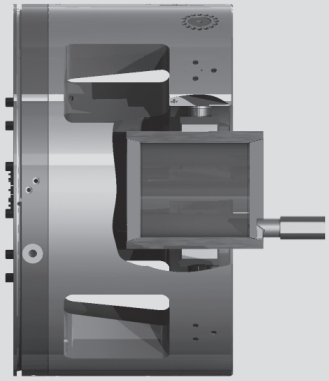

Fig. 3
After indexing 180°, machining the thread on side 2.

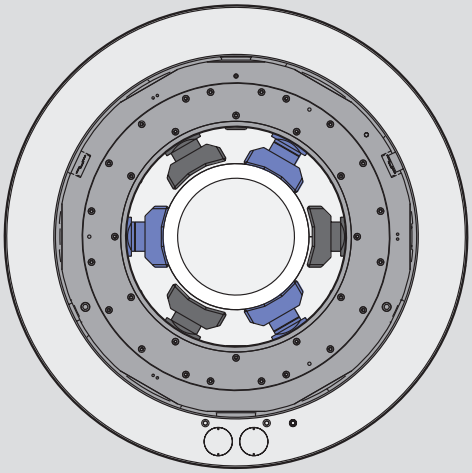

Fig. 4
3 self centering jaws center and clamp the coupling.

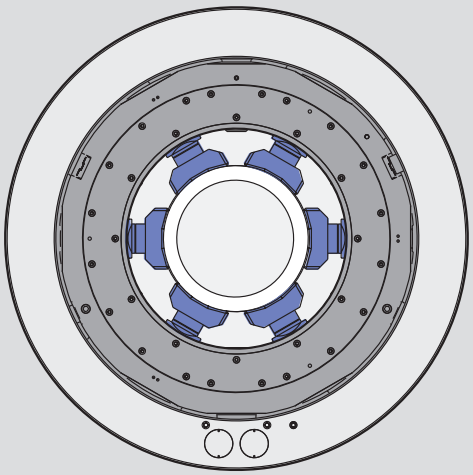

Fig. 5
When the coupling is centered and clamped, 3 compensating jaws clamp the coupling additionally to distribute the total clamping force onto 6 jaws = less deformation of the coupling/perfect roundness of thread.

SF-RAZ

Main dimensions and technical data

TONGUE & GROOVE

Data sheet shows no jaw dimensions and radial covers for switches and adjustments.
Data sheet shows only general dimensions!

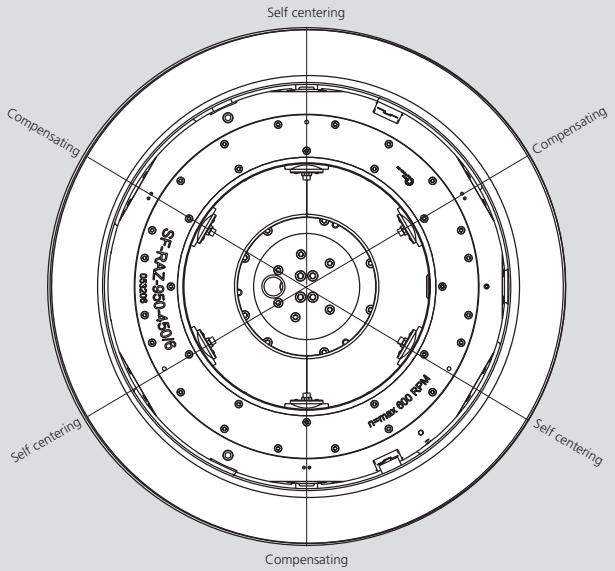

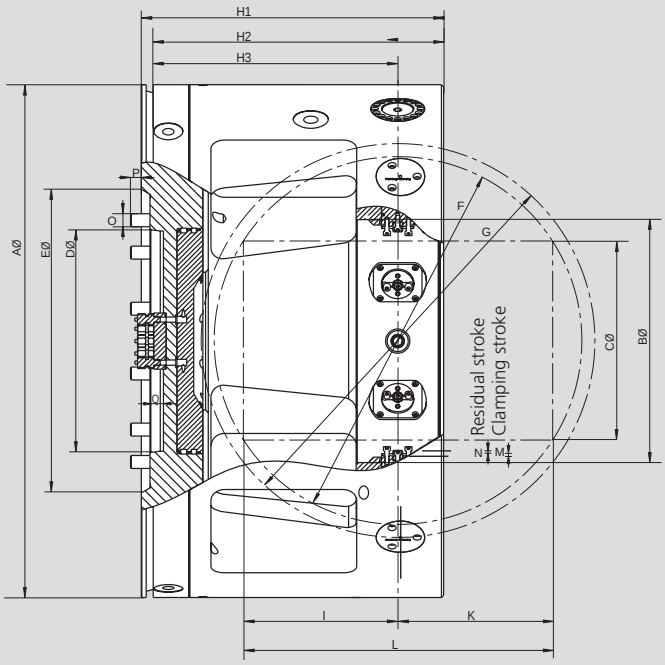

Subject to technical changes.
For more detailed information please ask our customer service.

SMW-AUTOBLOK Type			SF-RAZ 750	SF-RAZ 840	SF-RAZ 950	SF-RAZ 1050
Id. No.			**053090**	**053097**	**053206**	**053900**
Chuck O.D.	**A**	mm	750	840	950	1050
Indexing ring I.D.	**B**	mm	250	340	450	550
Max. workpiece O.D.	**C**	mm	185	275	368	468
Spindle mounting	**D**		A15	A15	A20	A20
Recess for spindle O.D.	**E**	mm	435	435	562	562
Max. swing workpiece	**F**	mm	480	570	680	780
Swing indexing ring	**G**	mm	526	618	728	828
	H1	mm	456	501	560	610
	H2	mm	440	485	544	594
	H3	mm	355	400	459	509
	I	mm	221.5	250	286	312
	K	mm	221.5	250	286	312
Max. length of workpiece	**L**	mm	443	500	572	624
Clamping at rec. clamping stroke	**M**	mm	5.5	5.5	5.5	5.5
Recom. residual stroke	**N**	mm	4.5	4.5	4.5	4.5
Total jaw stroke	**S**	mm	10	10	10	10
Mounting bolts	**O**	mm	M24	M24	M24	M24
	P	mm	37	37	36	36
Max. speed		r.p.m.	800	700	600	530
Max. pressure		bar (psi)	70 (1015)	70 (1015)	70 (1015)	70 (1015)
Max. grip force		kN (lbf)	250 (56202)	250 (56202)	250 (56202)	250 (56202)
Weight		kg (lbs)	1018 (2244)	1200 (2646)	1650 (3638)	2155 (4751)

Installation of SF-RAZ with hydraulic manifold, electric manifold and hose kit:
(All these accessories must be ordered separately)

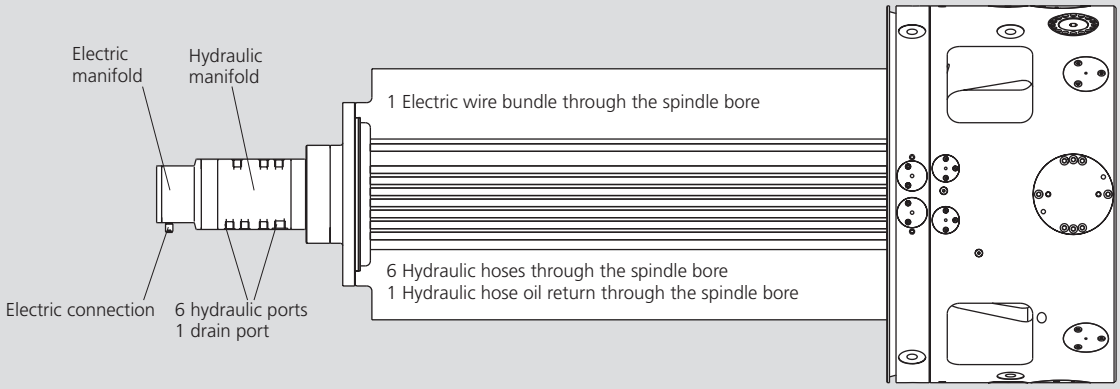

9

SF-RAZ2G

TONGUE & GROOVE

2 Position hydraulic ring indexing chuck

- 3 self centering and 3 compensating jaws
- Very compact design
- Fully automatic and controlled indexing
- Hydraulic actuation

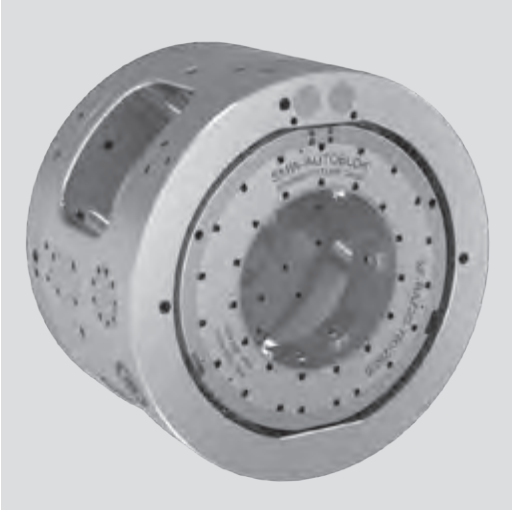

Application/customer benefits

- Machining of couplings in one set up
- Indexing 180° in 2 seconds
- 6 jaw clamping for perfect roundness of the coupling = ideal for premium threads
- High-Low clamping (roughing-finishing)
- Central coolant supply available on request

Technical features

- Better chuck to workpiece dia. Ratio
- Less chuck weight on the spinddle
- Extremly accurate and rigid indexing mechanism with locking system free of clearance
- All functions controlled by proximity switches
- For external clamping only
- Automatic central lubrication

Standard equipment

Chuck with mounting bolts

Ordering example

SF-RAZ2G 710

Accessories

Hydraulic manifold including electric manifold, hose kit

Machining of a coupling in 1 set up:

Fig. 1
Clamping the coupling on the outside diameter with 6 jaws (3 self centering and 3 compensating jaws) and machining the thread on side 1.

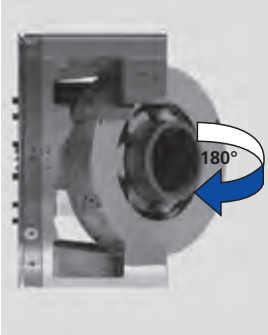

Fig. 2
Indexing the chuck 180° with the coupling remaining clamped.

Fig. 3
After indexing 180°, machining the thread on side 2.

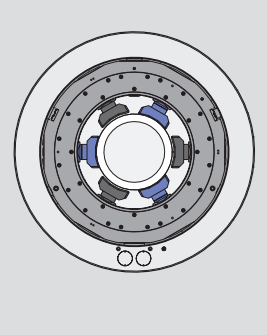

Fig. 4
3 self centering jaws center and clamp the coupling.

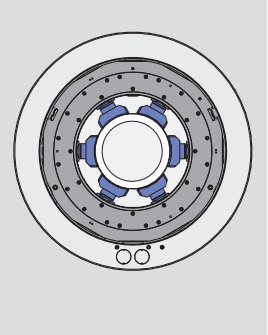

Fig. 5
When the coupling is centered and clamped, 3 compensating jaws clamp the coupling additionally to distribute the total clamping force onto 6 jaws = less deformation of the coupling/perfect roundness of thread.

Technical data

SMW-AUTOBLOK Type		SF-RAZ2G 710-220	SF-RAZ2G 780-290	SF-RAZ2G 880-390	SF-RAZ2G 1100-570
Id. No.		054720	on request*	on request*	on request*
Number of jaws		3+3	3+3	3+3	3+3
Chuck O.D.	mm	710	780	880	1.100
Stroke per jaw	mm	10	10	10	10
Pressure max.	bar	70	70	70	70
Clamping force at 50 bar	kN	175	175	175	175
Clamping diameter max.	mm	220	290	390	570
Speed max.	r.p.m	800	(*)	(*)	(*)
Weight	kg	800	~ 1.015	~ 1.380	~ 2.155
Coupling size / label size	inch	7 1/2"	9 5/8"	13 3/8"	20
Wall thickness (calc.)	mm	14.75	20	25	31

* Detailed dimensions on request.

SF-RAZ2G

Main dimensions and technical data

TONGUE & GROOVE

Data sheet shows no jaw dimensions and radial covers for switches and adjustments.
Data sheet shows only general dimensions!

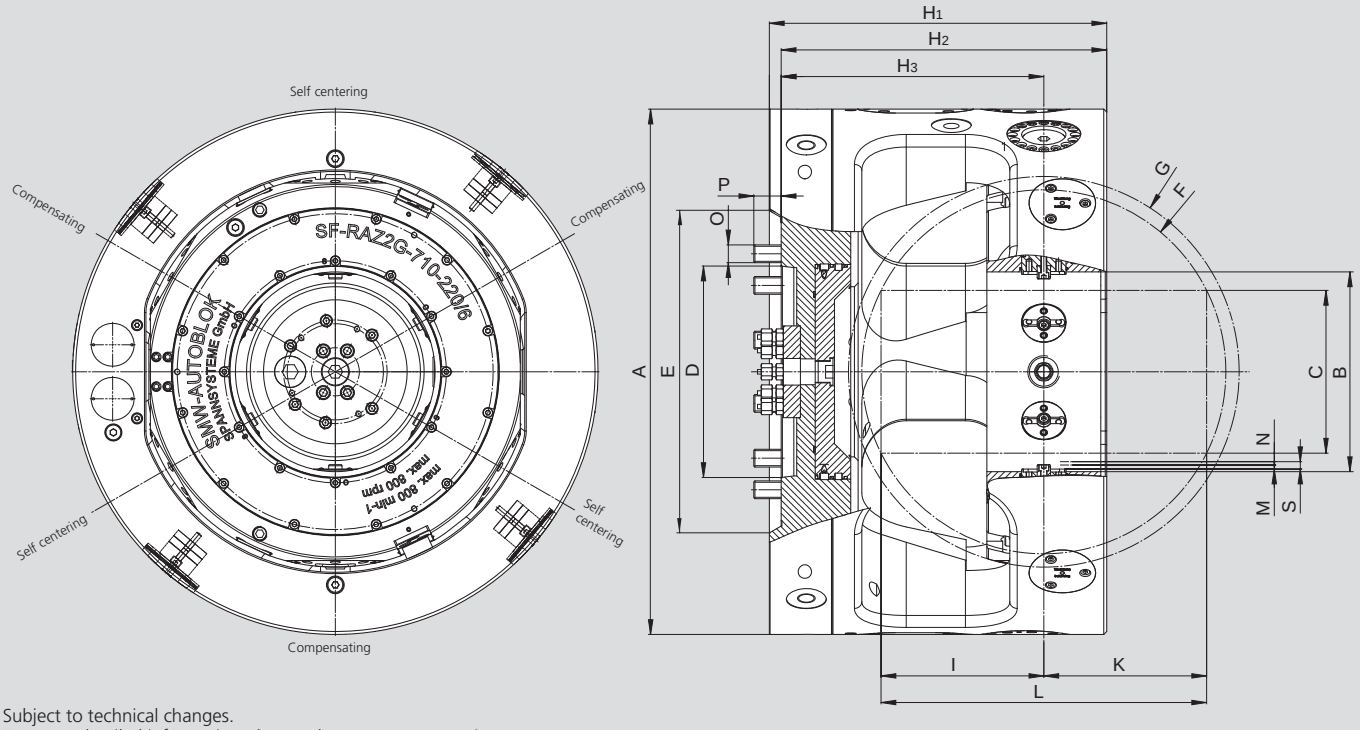

Subject to technical changes.
For more detailed information please ask our customer service.

SMW-AUTOBLOK Type			SF-RAZ2G 710-220	SF-RAZ2G 780-290	SF-RAZ2G 880-390	SF-RAZ2G 1100-570
Id. No.			**054720**	**055170**	**on request***	**on request***
Chuck O.D.	**A**	mm	710	780	880	1100
Indexing ring I.D.	**B**	mm	270	340		
Max. workpiece O.D.	**C**	mm	220	290	390	570
Spindle mounting	**D**		A15	A15		
Recess for spindle O.D.	**E**	mm	435	435		
Max. swing workpiece	**F**	mm	492	550		
Swing indexing ring	**G**	mm	528	598		
	H1	mm	456	491		
	H2	mm	440	475		
	H3	mm	355	390		
	I	mm	220	233.7		
	K	mm	220	233.7		
Max. length of workpiece	**L**	mm	440	467.4		
Clamping at rec. clamping stroke	**M**	mm	5.5	5.5		
Recom. residual stroke	**N**	mm	4.5	4.5		
Total jaw stroke	**S**	mm	10	10		
Mounting bolts	**O**	mm	M24	M24		
	P	mm	37	37		

* Detailed dimensions on request.

Installation of SF-RAZ2G with hydraulic manifold, electric manifold and hose kit:
(All these accessories must be ordered separately)

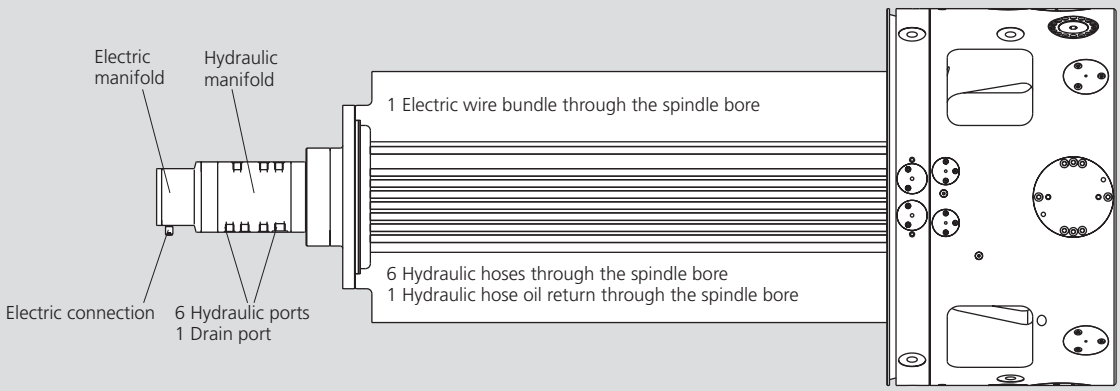

9

HYND-S

INCH
SERRATION

Hydraulic front end chuck Ø 180 - 400 mm

- Oil feed through spindle wall
- 3 and 4 jaws

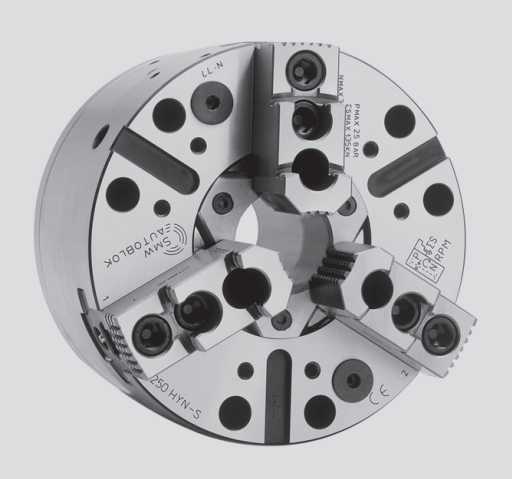

Application/customer benefits

- Machining of bars/shafts
- Complete spindle bore can be used
- For machines with rotary tables and special machines

HYND-S: Master jaws with INCH SERRATION (1/16"x 90°)

Technical features

- Power chuck with big through hole, wedge hook design
- Built in cylinder with safty valves
- Chuck body case hardened
- Special mounting dimensions on request

Standard equipment

3- or 4-jaw chuck
1 set T-nuts with bolts
1 set of top jaws
Mounting bolts

Ordering example

3-jaw chuck HYND-S 210-53-3 A06
or
4-jaw chuck HYND-S 250-66-4 Z140

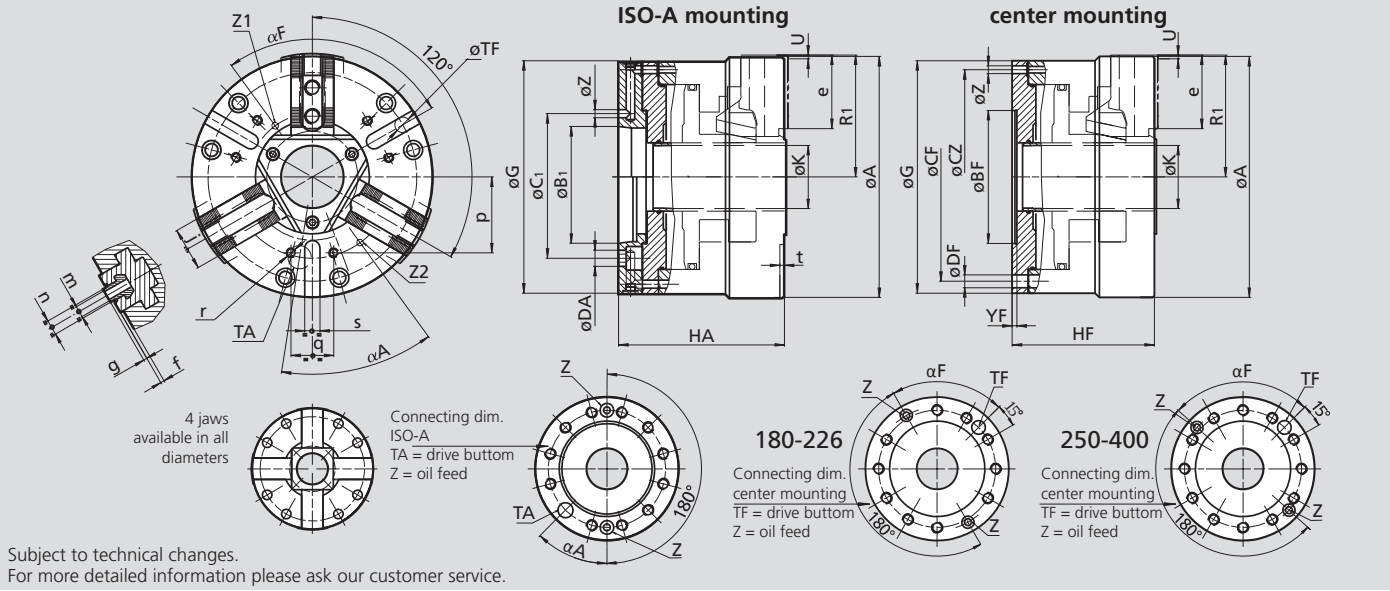

Subject to technical changes.
For more detailed information please ask our customer service.

Technical data

SMW-AUTOBLOK Type		HYND-S 180	HYND-S 210	HYND-S 226	HYND-S 250	HYND-S 315	HYND-S 400
Max. pressure	bar (psi)	20 (290)	25 (363)	22 (319)	25 (363)	22 (319)	25 (363)
Max. gripping force	kN (lbf)	72 (16186)	115 (25853)	115 (25853)	135 (30349)	160 (35969)	210 (47210)
Max. speed	r.p.m.	5000	4200	4200	3600	3100	2500
Moment of inertia	kg·m²	0.09	0.18	0.22	0.40	0.85	1.9
Weight (without top jaws) (ISO-A)	kg (lbs)	20 (44)	31 (68)	34 (75)	48 (106)	70 (154)	145 (320)

Dimensions

Type	A mm	G mm	K mm	R1 open mm	U stroke mm (inch)	Z mm	e mm	f mm	g mm	j mm	m mm	n mm	p mm	q mm	r mm	s mm	t mm
HYND-S 180	180	180	53	90.5	3.5 (0.14")	7	49.5	5	2.5	30	M10	14	-	-	-	-	-
HYND-S 210	212	212	53	108	3.5 (0.14")	7	66	4	2.5	36	M12	17	80	28	M8	16	5
HYND-S 226	226	226	65	116	3.5 (0.14")	7	66	4	2.5	36	M12	17	90	36	M8	16	5
HYND-S 250	254	245	66	128.5	4.0 (0.16")	8.5	77.5	4	3.5	45	M16	21	80	45	M10	16	5
HYND-S 315	315	305	102	160.5	4.5 (0.18")	8.5	93	4	3.5	45	M16	21	100	60	M10	20	5
HYND-S 400	400	335	130	202	5.5 (0.22")	10	116	5	3.5	62	M16	21	135	80	M12	20	5

Dimensions of chucks with center mounting

Type	BF H6 mm	CF mm	CZ mm	DF mm	HF mm	YF mm	TF mm	αF deg.	Mass kg (lbs)
HYND-S 180	140	163	165	9	119	6	8	45°	17 (38)
HYND-S 210	110	190	190	11	126	5	12	75°	27 (60)
HYND-S 226	140	206	206	11	129	5	12	30°	30 (66)
HYND-S 250	140	220	226	13.5	150	5	16	96°	42 (93)
HYND-S 315	140	262	280	17	160	5	16	96°	60 (132)
HYND-S 400	200	280	235	17	190	5	20	65°	133 (293)

Dimensions of chucks with ISO-A mounting

Type	BA J4 mm	CA mm	DA mm	HA mm	αA deg.
HYND-S 180 A5	82.563	104.8	11.5	137	45°
HYND-S 180 A6	106.375	133.4	13.5	140	45°
HYND-S 210 A5	82.563	104.8	11.5	146	45°
HYND-S 210 A6	106.375	133.4	13.5	146	45°
HYND-S 226 A6	106.375	133.4	13.5	149	45°
HYND-S 250 A6	106.375	133.4	13.5	175	45°
HYND-S 250 A8	139.719	171.4	17	175	45°
HYND-S 315 A8	139.719	171.4	17	185	45°
HYND-S 315 A11	196.869	235	21	185	45°
HYND-S 400 A8	139.719	171.4	17	220	45°
HYND-S 400 A11	196.869	235	21	220	45°

Hydraulic front end chuck Ø 500 - 800 mm

HYDL-S

- Oil feed through spindle wall
- 3 jaws

LONG STROKE
INCH SERRATION

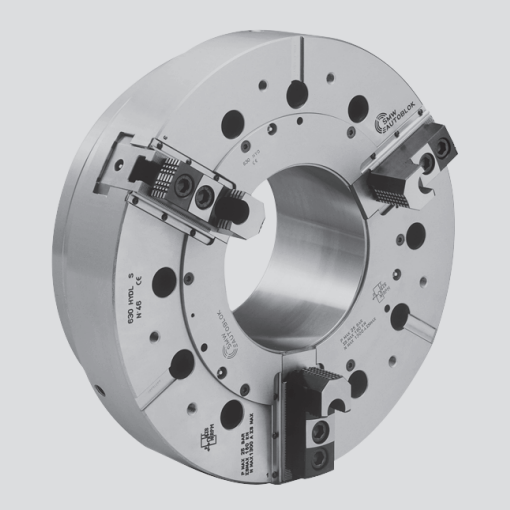

Application/customer benefits

- Machining of bars/shafts
- For special applications / special machines / rotary tables
- Complete spindle bore can be used

HYDL-S: Long stroke INCH SERRATION 3/32"x 90°

Technical features

- Power chuck with big through hole, wedge hook design
- Built in cylinder with safty valves
- Chuck body case hardened
- Special mounting dimensions on request

Standard equipment

3-jaw chuck
1 set T-nuts with bolts
1 set of top jaws
Mounting bolts

Ordering example

3-jaw chuck HYDL-S 500 A11

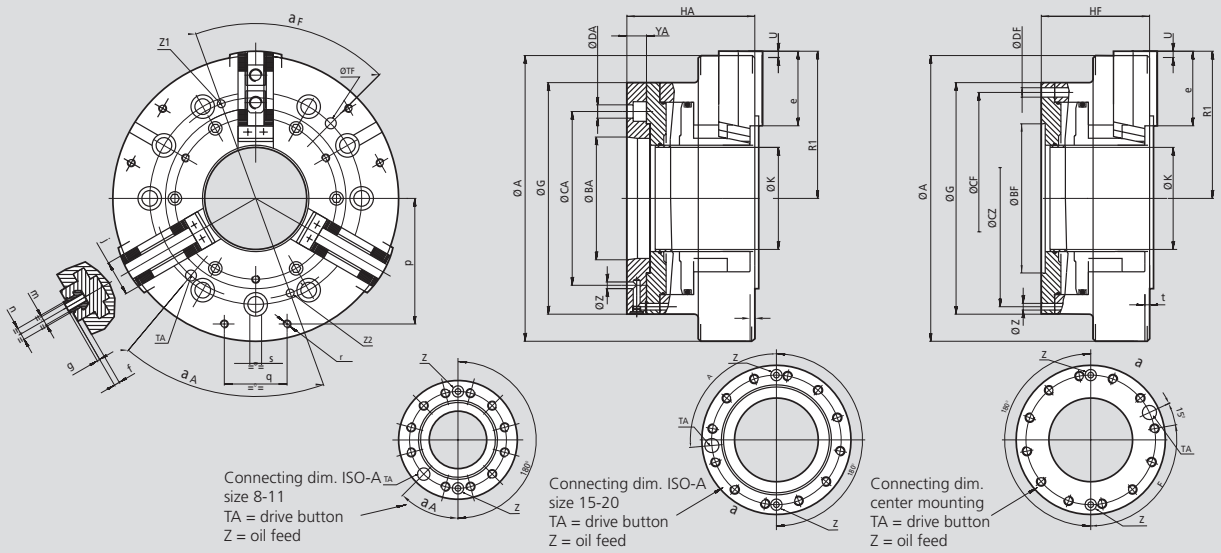

Subject to technical changes.
For more detailed information please ask our customer service.

Technical data

SMW-AUTOBLOK Type		HYDL-S 500	HYDL-S 630	HYDL-S 800
Radial jaw stroke	mm (inch)	11 (0.43")	13.5 (0.53")	13.5 (0.53")
Max. pressure	bar (psi)	30 (435)	25 (363)	25 (363)
Max. gripping force	kN (lbf)	150 (33721)	250 (56202)	250 (56202)
Max. speed	r.p.m.	1600	1300	1000
Moment of inertia	kg·m²	5.1	16	48
Weight (without top jaws)	kg (lbs)	160 (353)	310 (683)	580 (1279)

Dimensions type HYDL-S

Type	A mm	G mm	K mm	R1 open mm	U stroke mm (inch)	e mm	f mm	g mm	j mm	m mm	n mm	Z mm
HYDL-S 500	500	400	180	256	11.0(0.43")	116	9	3.5	62	M20	25.5	10
HYDL-S 630	630	540	250	323	13.5(0.53")	140	9	3.5	62	M20	25.5	10
HYDL-S 800	800	540	250	405	13.5(0.53")	165	9	3.5	75	M20	25.5	12

Dimensions of chucks with center mounting

All types Size	B_F H6 mm	C_F mm	C_Z mm	D_F mm	H_F mm	Y_F mm	T_F mm	α_F deg.
Ø 500	300	350	330.2	17	185	6	20	65°
Ø 630	380	463.6	463.6	27	210	6	24	65°
Ø 800	380	463.6	463.6	27	220	6	24	65°

Dimensions of chucks with ISO-A mounting

All types Size	B_A J4 mm	C_A mm	D_A mm	H_A mm	α_A deg.	Z_A mm
Ø 500 A11	196.869	235	21	220	45°	10
Ø 500 A15	285.775	330.2	25	225	85°	12
Ø 630 A15	285.775	330.2	25	250	85°	12
Ø 630 A20	412.775	463.6	27	230	85°	12
Ø 800 A20	412.775	463.6	27	240	85°	12

Self-centering Steady Rests for turning and grinding

Page 326

SLU-X®

Self-centering Steady Rest
Standard Line

- Fully sealed body
- Monitoring Steady Rest open via proximity switch
- Special sizes on request

Page 328

SLUB

Self-centering Steady Rest
Standard Line

Extra compact with side mounted cylinder

- Monitoring open/closed via proximity switch
- Special sizes on request

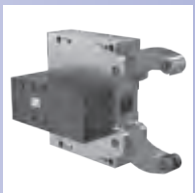

Page 330

SLUB-A

Self-centering Steady Rest
Standard Line

Extra compact with side mounted cylinder and additional pivoting upper arm for automatic vertical loading

- Monitoring open/closed via proximity switch
- Special sizes on request

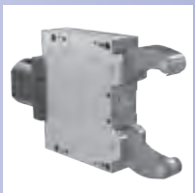

Page 332

SLU

Self-centering Steady Rest
Basic Line

- Large clamping range
- Monitoring open/closed via proximity switch
- Hardened arms

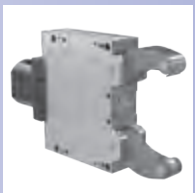

Page 334

SLU-A

Self-centering Steady Rest
Basic Line

Pivoting upper arm for automatic vertical loading

- Large clamping range
- Monitoring open/closed via proximity switch
- Hardened arms

Page 336

SR®

Self-centering Steady Rest
Premium Line

- Fully sealed body
- Integrated coolant/air flush
- Diameter measuring system or monitoring open via proximity switches
- Special sizes on request

Page 338

SRA

Self-centering Steady Rest
Premium Line

Additional pivoting upper arm for automatic vertical loading

- Fully sealed body
- Integrated coolant/air flush
- Diameter measuring system or monitoring open via proximity switches
- Special sizes on request

Page 340

SR-CL

Self-centering Steady Rest
Premium Line – with fine adjustment

- Integrated fine adjustment of the center line
- Sealed body
- Integrated coolant/air flush
- Diameter measuring system or monitoring open via proximity switches

Page 342

K

Self-centering Steady Rest
Premium Line

- Compact design
- Sealed body
- Integrated coolant/air flush
- Diameter measuring system or monitoring open via proximity switches
- Special sizes on request

Page 344

KA

Self-centering Steady Rest
Premium Line

- Compact design
- Sealed body
- Integrated coolant/air flush
- Double guided center arm to carry heavy loads
- Excenter fine adjustment on the outer arms
- Special sizes on request

Page 346

KLU / KLU-A

Self-centering Steady Rest
Premium Line

- Narrow arms for crankshafts
- Sealed body
- Integrated coolant/air flush
- Diameter measuring system or monitoring open via proximity switches
- Special sizes on request

Page 348

RX

Self-centering Steady Rest
Premium Line

- Extra compact design
- Patented double cam system
- Sealed body
- Integrated coolant/air flush
- Monitoring steady rest open via proximity switch
- Special sizes on request

Page 352

SCU

Linear stroke control unit

- For SMW-AUTOBLOK steady rests
- Linear monitoring of the complete clamping stroke – Avoids collision with the tools
- Time saving by only partial opening of the steady
- Protection class IP 66, Output signal 4-20 mA or 0-10 V, Electrical power supply 24 VDC
- **proofline®** = fully sealed – low maintenance

Page 354

SRG/ SRG-B

Grinding Steady Rest
with fine adjustment of the center

- Horizontal and vertical fine adjustment of the grinding center
- Retractable Steady Rest arms
- Port for compressed air against dust and coolant
- Monitoring via proximity switches
- Ideal for follow down grinding

SMW-AUTOBLOK worldwide leader in Steady Rests

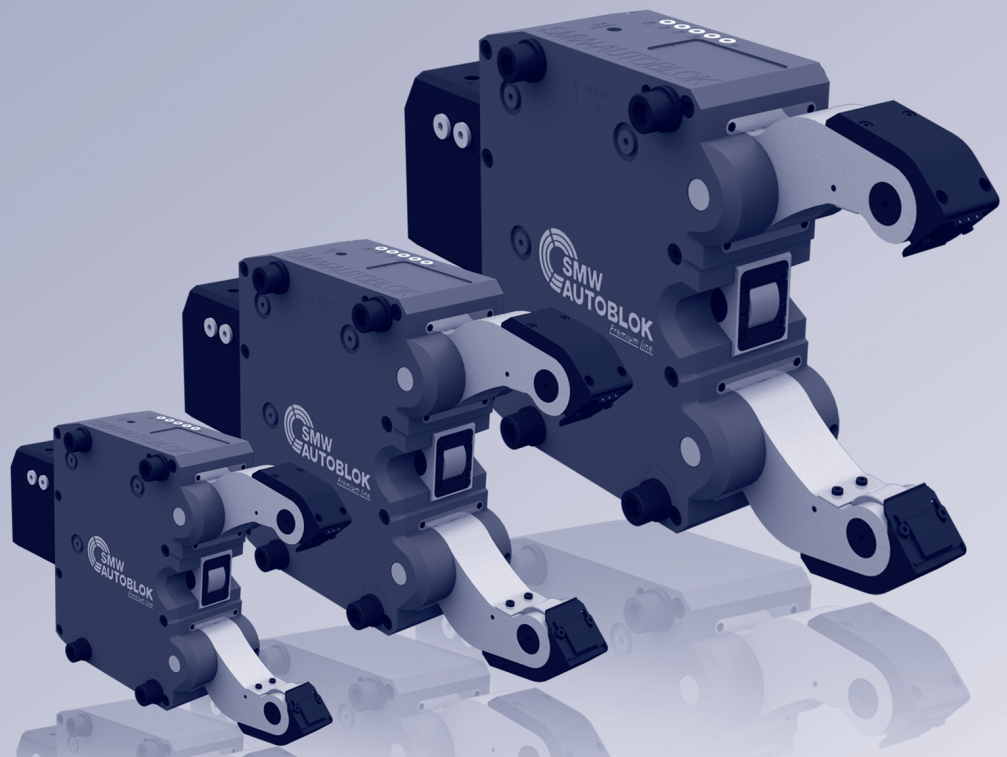

Fixed or travelling application

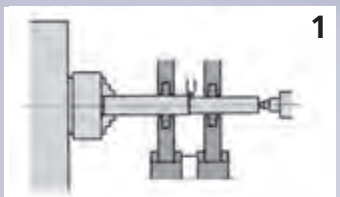

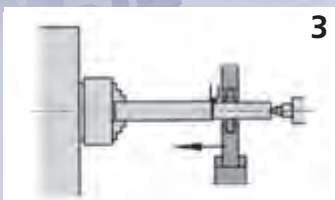

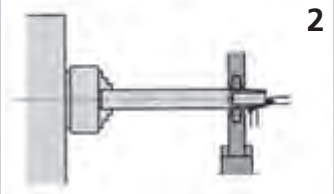

1. Tandem Steady Rest fixed
2. Steady Rest fixed for end machining
3. Steady Rest travelling

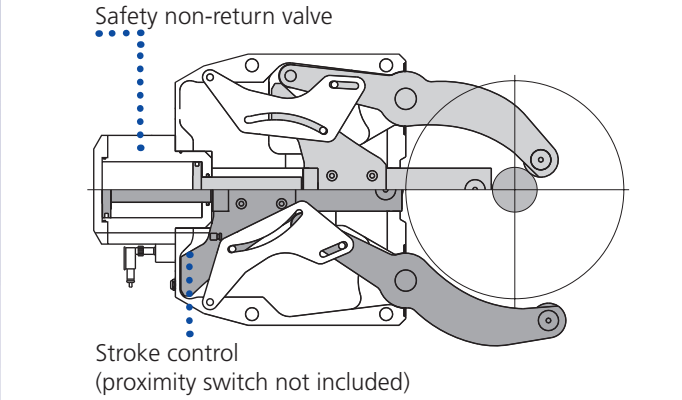

Features included in standard range

Steady Rest Type	Standard Line		Basic Line	Premium Line					
	SLU-X	SLUB, SLUB-A	SLU, SLU-A	SR	SRA	SR-CL	K, KA	KLU, KLU-A	RX
Steady Rest Size	1 - 5.1	3 - 6	1 - 6	2 - 6	2 - 6	4 - 6	3 - 7.1	215 - 540	5 - 6.1
Sealed body	■			■	■	■	■	■	■
Safety valve	■	■	■	■	■	■	■	■	■
Stroke control (proximity switch not included)	■	■	■	■	■	■	■	■	■
1 set swarf guard 3-piece	■	■	■						
1 set swarf guard with integrated coolant flush				■	■	■	■	■	■
1 set cylindrical rollers	■	■	■	■	■	■	■	■	■
Port for compressed air	■	■	■	■	■	■	■	■	■
Port for coolant through arms incl. chipguard				■	■	■	■	■	■
Toolbox	■	■		■	■	■	■	■	■

SLU-X® • SR® • K • KLU • RX

SLU-X / SLU / SR / K / KLU / RX
large clamping range

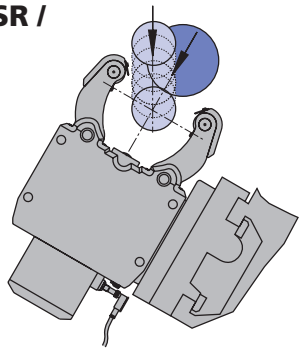

SLU-A / SRA / KLU-A / KA
additional pivoting upper arm
for automatic vertical loading

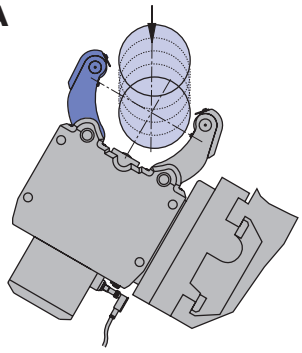

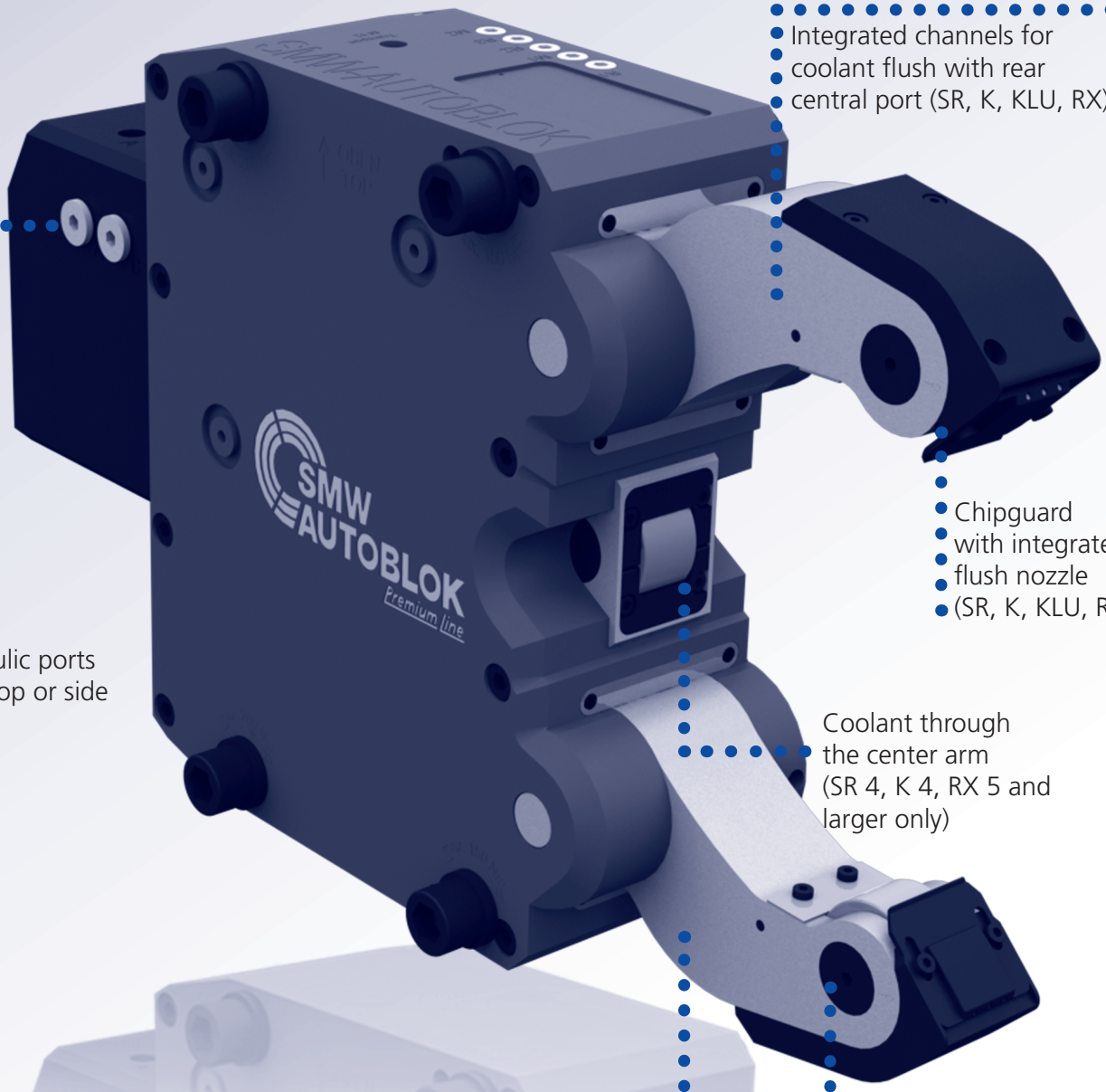

Integrated channels for coolant flush with rear central port (SR, K, KLU, RX)

Chipguard with integrated flush nozzle (SR, K, KLU, RX)

Hydraulic ports from top or side

Coolant through the center arm (SR 4, K 4, RX 5 and larger only)

Arms and centerpiece hardened (SLU-X, SR, K, KLU, RX)

Easy change of rollers without loose parts

Mechanism for opening the arms of the Steady Rest without springs and free from wear.

Option of manual lubrication (M) (all types)

- Low cost solution for medium working conditions and low build up of swarf.
- The lubrication points and rollers are supplied with lubrication grease via the grease nipples and the grease gun.
- Lubrication intervals depending on the working conditions normally every 4 to 8 operating hours.
- Grease: KPE 2R-20 DIN 51502.

Manual lubrication (M)

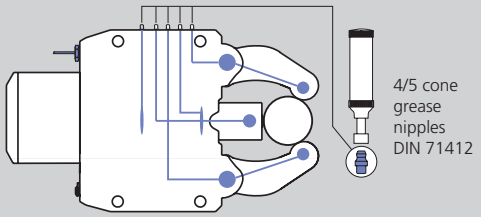

Option of central oil lubrication (Z) (all types)

- For heavy working conditions and high build up of swarf.
- For travelling Steady Rest applications.
- The use of our separate complete lubrication unit with timer control is recommended.
- Lubricating intervals 5 - 20 min.
- Min./max. operating pressure 10 / 45 bar.
- Oil: Viscosity of 46 mm²/s (viscosity class ISO).

Central lubrication Oil (Z)
Centralized lubrication G 1/8"

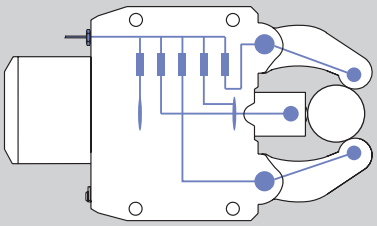

Lubrication unit oil
Id. No. 088707

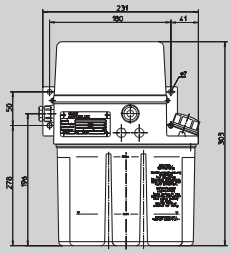

Option of central lubrication oil + air (OLD) (all types)

- For heaviest cutting conditions with high built up of swarf, dust or coolant.
- The SMW-AUTOBLOK oil + air unit for lubrication with built-in timer control is mandatory.
- This unit injects oil for lubrication into the air hose in adjustable intervals (1 - 4 min.).
- The permanent air flow (min. 3 bar) feeds the oil to the rollers and keeps them clean.
- Oil: Viscosity of 46 mm²/s (viscosity class ISO).

Oil + air lubrication (OLD)
Centralized lubrication G 1/8"

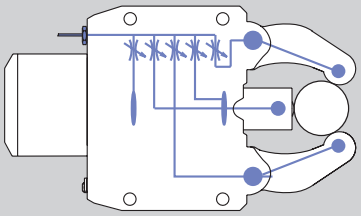

Lubrication unit oil + air
Id. No. 088708

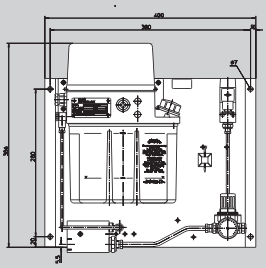

Option of central grease lubrication (F) (not SLU/SLU-A/SLUB/SLUB-A)

- For machines with central grease lubrication.
- For application and intervals please follow the instruction of the machine maker.
- Min./max. operating pressure 30 / 45 bar.
- Grease: NLGI class 0 or 1.

Central grease lubrication (F)
Centralized lubrication G 1/8"

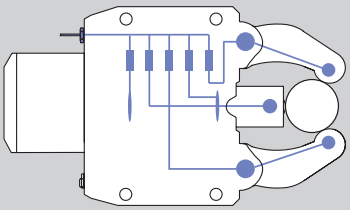

Option of rollers (all types)

- SMW-AUTOBLOK rollers (precision class P05) specially developed for our Steady Rests
- Special sealing ensures highest precision and service life
- Standard equipment: 1 set of cylindrical rollers
- Option: Spherical rollers (for travelling Steady Rests), synthetic material rollers, carbide rollers

Original SMW-AUTOBLOK roller

cylindrical

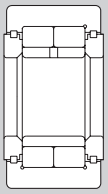

spherical

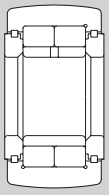

narrow

Rollers (all types)

- Rollers steel (standard): Surface of workpiece not hardened.

Available optional materials:

- Rollers synthetic material: Surface of workpiece polished or chrome plated.
- Rollers carbide: Surface of workpiece hardened.

Rollers steel

Rollers synthetic material

Rollers carbide

Eccentric fine adjustment

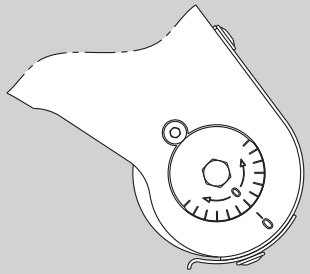

Option fine adjustment of center line
(all types)

- Eccentric roller pins on the two Steady Rest arms allow a quick fine adjustment of the center line.
- This avoids to unlock and adjust the entire Steady Rest on the bracket for small adjusting movements.
- Adjustment of open steady rest only!

Coolant/air feed

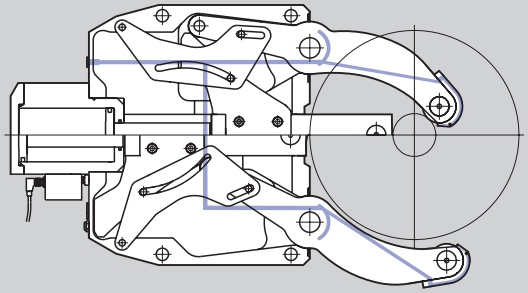

Coolant/air feed (SR/K/KLU/ RX only)

- Built-in channels to feed coolant or air from a central connecting port to the Steady Rest arms.
- Basic equipment for SR/K/KLU/RX steady rests.
- From size SR-4 / K4 and larger with coolant through the center arm.

Chipguard coolant/air

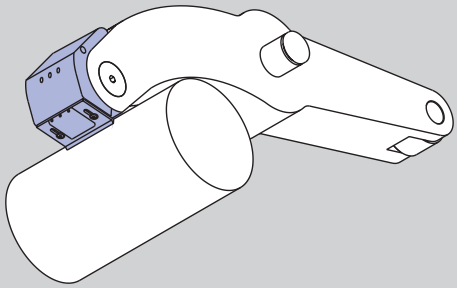

Patented coolant/air chipguard with integrated flush nozzles (SR/K/KLU/ RX only)

- Keeps roller clamping area free from chips
- The patented double flush nozzles keep front and rear of the wiper area clean.

Only for steady rests with coolant / air feed.
Benefit:

- Constant centering accuracy.
- No damage of workpiece and rollers caused by chips/swarf.
- Less roller consumption = less costs.

SCU
diameter measuring system

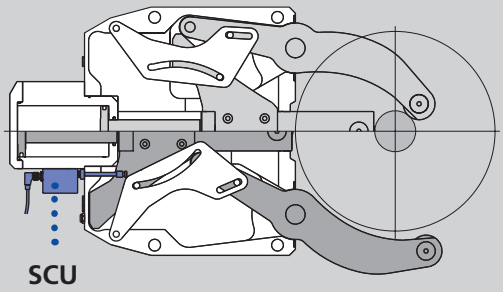

Option linear diameter measuring system SCU (not SLU, SLUB, SLU-A, SLUB-A)

- The position of the clamping arms is monitored by the linear measuring system SCU.
- Avoids collision with workpieces, turret, loader etc.
- Reduced cycle time due to position controlled opening of the arms to the requested opening only.
- SCU: In: 24 V Out: 4 – 20 mA

Steady Rest bracket with adjustment device

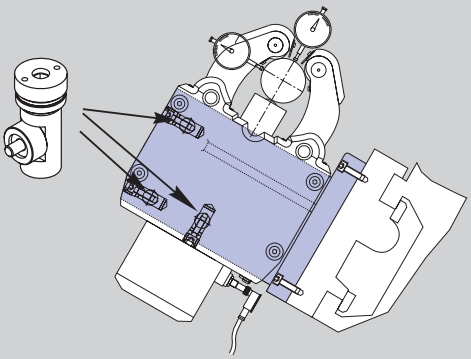

Steady Rest bracket

- A perfect bracket is very important for the function/precision of the Steady Rest.
- Fast and easy adjustment can be done with the SMW-AUTOBLOK adjustment device integrated into the bracket.
- SMW-AUTOBLOK supplies the correct bracket for all applications as a turnkey solution.

SLU-X®

Self-centering Steady Rests
Standard Line

- **Sealed body**
- **Stroke control for end position open (switch not included)**

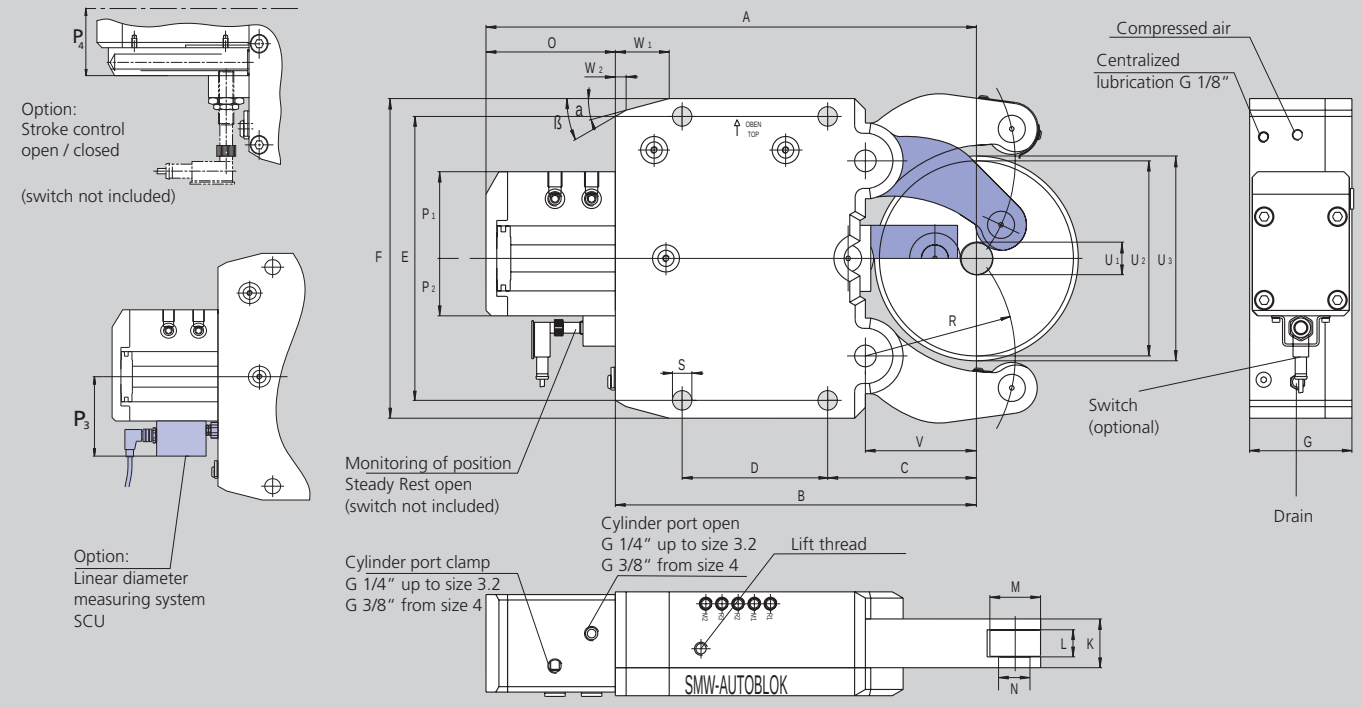

Subject to technical changes.
For more detailed information please ask for customer drawing.

Drain and compressed air
G 1/8" up to size 3.2
G 1/4" from size 4

SMW-AUTOBLOK Type Size		SLU-X 1	SLU-X 2	SLU-X 3	SLU-X 3.1	SLU-X 3.2	SLU-X 4	SLU-X 5	SLU-X 5.1
Centering range without chip guard	**U_1**	**6**	**8**	**12**	**20**	**50**	**30**	**45**	**85**
	U_2	**70**	**101**	**152**	**165**	**200**	**245**	**310**	**350**
Max. axial clearing dia.	**U_3**	**75**	**106**	**164**	**172**	**202**	**253**	**320**	**352**
Centering range with chip guard 3-piece	**U_1**	**8**	**12**	**14**	**20**	**50**	**30**	**45**	**85**
	U_2	**70**	**101**	**152**	**165**	**200**	**245**	**310**	**350**
	A	214.5	277	428	436	455	603	697	717
	B	149	195	312	320	335	448	510	530
	C	52	70	115	123	138	146	178	198
	D	66	85	135	135	135	240	270	270
	E	140	170	262	262	262	365	400	400
	F	160	195	295	295	295	405	440	440
	G	63	75	95	95	95	110	145	145
	K	28	35	45	45	45	60	75	75
Width of rollers	L	15	19	25	25	25	25	29	29
Diameter of rollers	M	24	35	47	47	47	52	62	62
Diameter of roller pins	N	8	15	20	20	20	25	30	30
	O	65.5	82	116	116	120	155	187	187
	P_1	53	63	85	85	85	91	97	97
	P_2	29	40	53	53	53	61	63	63
	P_3	-	82	95	95	95	103	105	105
	P_4	40	61	74	74	74	82	84	84
	R	55	74	119	124	139	172	209	229
	S	11	14	18	18	18	23	23	23
	V	37	51	85	93	103	128	160	180
	W_1	20	30	50	50	50	58	62	62
	W_2	5	11.2	10	10	10	18.3	19.1	19.1
	α	15°	15°	15°	15°	15°	15°	18°	18°
	β	45°	30°	30°	30°	30°	40°	40°	40°
Piston area*	cm²	7	19.6	38.5	38.5	38.5	63.6	78.5	78.5
Operation pressure min./max.	bar	6/70	8/70	8/80	8/80	8/80	8/70	8/80	8/80
Max. clamping force/roller	daN	165	450	1000	1000	1000	1500	2000	2000
Centering accuracy within the whole range	mm	0.02	0.02	0.04	0.04	0.04	0.05	0.06	0.06
Repeatability accuracy	mm	0.005	0.005	0.007	0.007	0.007	0.007	0.01	0.01
Max. roller surface speed	m/min	800	800	725	725	725	715	600	600
Weight approx.	kg	8	17	50	51	59	103	168	170

* Cylinders differing from standard available on request.
Subject to technical changes!

SLU-X®

Self-centering Steady Rests
Standard Line

SLU-X Steady Rest with stroke control Steady Rest open via proximity switch (without proximity switch)									
Steady Rest size		**1**	**2**	**3**	**3.1**	**3.2**	**4**	**5**	**5.1**
SLU-X-M Manual lubrication	Id. No.	127563	129001	129018	129196	129234	129141	129278	129291
SLU-X-Z Central lubrication oil	Id. No.	127562	129000	129020	129195	129235	129140	129280	129292
SLU-X-OLD Central lubrication oil + air	Id. No.	127564	129002	129019	129197	129236	129142	129279	129293
SLU-X-F Central grease lubrication	Id. No.	129761	129762	129763	129764	129765	129766	129767	129768

SLU-X Steady Rest with stroke control Steady Rest open / closed via proximity switch (without proximity switch)									
Steady Rest size		**1**	**2**	**3**	**3.1**	**3.2**	**4**	**5**	**5.1**
SLU-X-M Manual lubrication	Id. No.	126155	222390	221912	223890	222400	on request	on request	on request
SLU-X-Z Central lubrication oil	Id. No.	126154	221116	221151	221152	221153	221154	221155	221156
SLU-X-OLD Central lubrication oil + air	Id. No.	126156	on request	221913	on request	on request	on request	on request	on request
SLU-X-F Central grease lubrication	Id. No.	on request	on request	221914	225348	225349	on request	on request	on request

SLU-X Steady Rest with stroke control via linear stroke control SCU, output 4-20 mA									
Steady Rest size		**1**	**2**	**3**	**3.1**	**3.2**	**4**	**5**	**5.1**
SLU-X-Z Central lubrication oil	Id. No.	-	225830	225831	225832	225833	222513	222183	225834

SLU-X Steady Rest with stroke control via linear stroke control SCU, output 0-10 V									
Steady Rest size		**1**	**2**	**3**	**3.1**	**3.2**	**4**	**5**	**5.1**
SLU-X-Z Central lubrication oil	Id. No.	-	on request	on request	on request	on request	on request	on request	on request

Type SLU-X

♦ denotes wearing parts, recommended stock items

Steady Rest size		**1**	**2**	**3**	**3.1**	**3.2**	**4**	**5**	**5.1**
Compact lubrication system for oil pressure lubrication Container 2.7 l, 220 V *,**		088707	088707	088707	088707	088707	088707	088707	088707
Compact lubrication system for oil & air lubrication Container 2.7 l, 220 V *,**		088708	088708	088708	088708	088708	088708	088708	088708
Eccenter fine adjustment compl. at lever arm (2 pcs. per Steady Rest)		-	127237	127240	127240	127240	128474	128584	128584
Inductive limit switch		087926	087926	087926	087926	087926	087926	087926	087926
Swarf guard 3-pieces	♦	126171	026116	026117	026117	026117	026118	026119	026119
Spring loaded chip-guard***	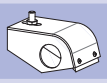 ♦	on request	025760	025759	025759	025759	025758	025757	025757
Roller pin with collar***	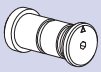 ♦	on request	225317	221112	221112	221112	204052	125824	125824
Roller stripper (2-pieces) for middle piece	♦	200155	200154	198950	198950	198950	196199	196200	196200
Rollers cylindrical design	♦	023122	016952	016951	016951	016951	016953	018345	018345
Rollers spherical design	♦	028738	017658	018433	018433	018433	018443	019545	019545
Rollers synthetic material ****	♦	on request	029451	023443	023443	023443	023672	023650	023650
Roller stripper (2-pieces) for middle piece with roller synthetic material	♦	-	204211	204212	204212	204212	204213	204215	204215
Rollers carbide	♦	on request	129223	129225	129225	129225	220918	222038	222038
Adjustment device 1 set = 3 pieces		-	-	200178	200178	200178	200179	200179	200179

* When placing an order please advise voltage.
** On request 110 V available.
*** Use of spring located chip-guard only possible in combination with roller pin with collar.
**** Attention: Reduced clamping force! Please refer to the clamping force value marked on the roller.

SLUB

Self-centering Steady Rests
Standard Line

Extra compact with side mounted cylinder

- **Monitoring open/closed via proximity switch**
- **Special sizes on request**

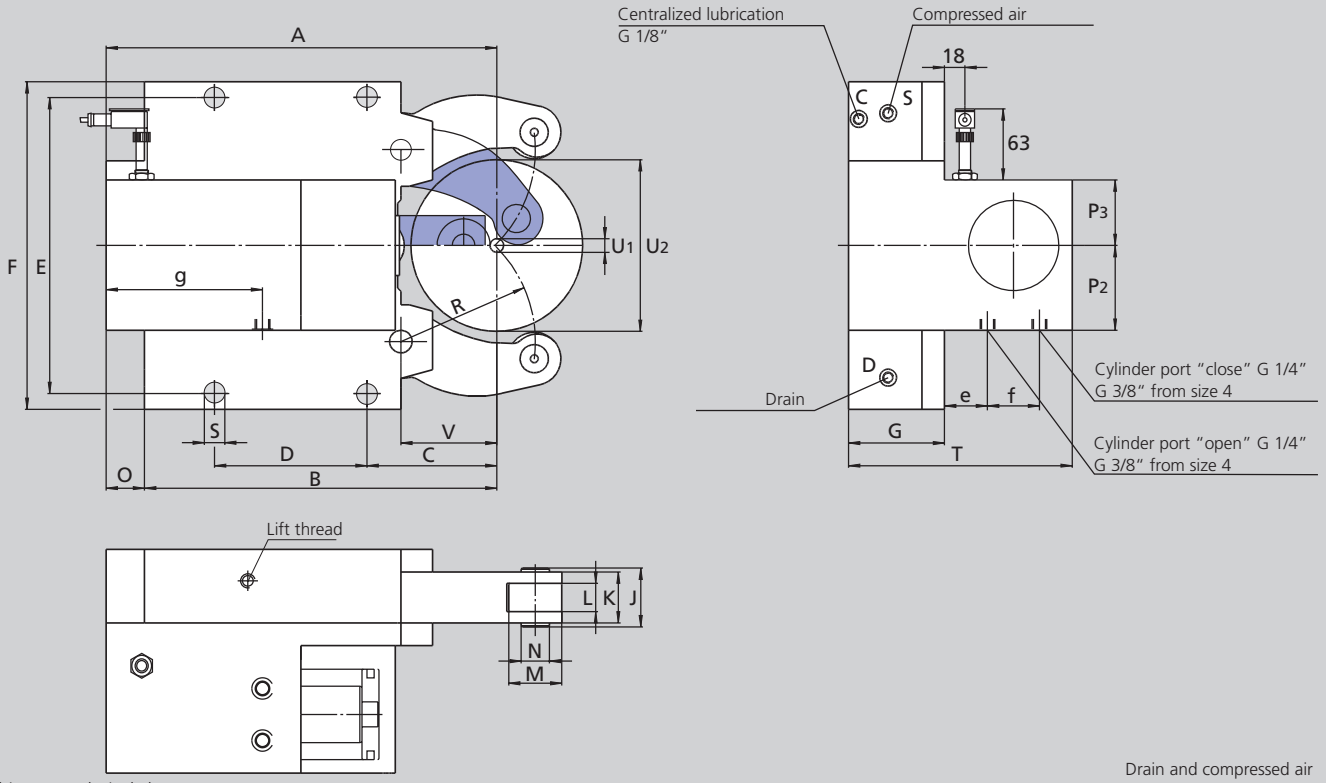

Subject to technical changes.
For more detailed information please ask for customer service.

Drain and compressed air
G 1/8" up to size 3.2
G 1/4" from size 4

SMW-AUTOBLOK Type Size		SLUB 3	SLUB 3.1	SLUB 3.2	SLUB 4	SLUB 5	SLUB 5.1	SLUB 6
Centering range without chip guard	**U1**	**12**	**20**	**50**	**35**	**50**	**90**	**125**
	U2	**152**	**165**	**200**	**245**	**310**	**350**	**460**
Centering range with chip guard 3-piece	U1	14	20	50	35	50	90	125
	U2	152	165	200	245	310	350	460
	A	346	354	372.5	480	612.5	632.5	800
	B	312	320	335	448	510	530	709
	C	115	123	138	146	178	198	215
	D	135	135	135	240	270	270	330
	E	262	262	262	365	400	400	610/640
	F	290	290	290	400	440	440	680
	G	85	85	85	110	145	145	145
	J	52	52	52	67	83	83	83
	K	45	45	45	60	75	75	75
Width of rollers	L	25	25	25	25	29	29	29
Diameter of rollers	M	47	47	47	52	62	62	80
Diameter of collars	N	25	25	25	32	36	36	42
	O	34	34	37.5	32	102.5	102.5	91
	P2	75	75	75	68	85	85	100
	P3	58	58	58	68	85	85	85
	R	119	124	139	172	209	229	290
	S	18	18	18	23	23	23	27
	T	198	198	198	243.5	325	325	350
	V	85	93	103	128	160	180	175
	e	38	38	38	38.5	79.5	79.5	74.5
	f	46	46	46	66	66	66	96
	g	138.5	138.5	138.5	190	261	215	334.5
Piston area*	cm²	50	50	50	78	78	78	132
Operation pressure min./max.	bar	8/60	8/60	8/60	8/60	8/80	8/80	8/70
Max. clamping force/roller	daN	1000	1000	1000	1500	2000	2000	3000
Centering accuracy within the whole range	mm	0.04	0.04	0.04	0.05	0.06	0.06	0.06
Repeatability accuracy	mm	0.007	0.007	0.007	0.007	0.01	0.01	0.01
Max. roller surface speed	m/min.	725	725	725	715	600	600	560
Weight approx.	kg	45	46	48	106	175	178	483

* On request cylinder differing from standard available
Subject to technical changes!

SLUB

Self-centering Steady Rests
Standard Line

SLUB Steady Rest with stroke control Steady Rest open / closed via proximity switch (without proximity switch)								
Steady Rest size		**3**	**3.1**	**3.2**	**4**	**5**	**5.1**	**6**
SLUB-M Manual lubrication	Id. No.	029865	029866	-	029867	029868	029909	029869
SLUB-Z Central lubrication oil	Id. No.	029855	029856	123929	029857	029858	029908	029859
SLUB-OLD Central lubrication oil + air	Id. No.	029875	029876	-	029877	029878	029910	029879

Type SLUB

♦ denotes wearing parts, recommended stock items

Steady Rest size		**3**	**3.1**	**3.2**	**4**	**5**	**5.1**	**6**
Compact lubrication system for oil pressure lubrication Container 2.7 l, 220 V *,**		088707	088707	088707	088707	088707	088707	088707
Compact lubrication system for oil & air lubrication Container 2.7 l, 220 V *,**		088708	088708	088708	088708	088708	088708	088708
Eccenter fine adjustment compl. at lever arm (2 pcs. per Steady Rest)		018437	018437	018437	018444	018450	018450	026595
Inductive limit switch		087926	087926	087926	087926	087926	087926	087926
Swarf guard 3-pieces	♦	026117	026117	026117	026118	026119	026119	026597
Roller stripper (2-pieces) for middle piece	♦	029797	029797	029797	029798	029799	029799	029800
Rollers cylindrical design	♦	016951	016951	016951	016953	018345	018345	026594
Rollers spherical design	♦	018433	018433	018433	018443	019545	019545	121302
Rollers synthetic material ***	♦	023443	023443	023443	023672	023650	023650	on request
Roller stripper (2-pieces) for middle piece with roller synthetic material	♦	029797	029797	029797	205400	029799	029799	-
Rollers carbide	♦	129225	129225	129225	220918	222038	222038	on request
Adjustment device 1 set = 3 pieces		200178	200178	200178	200179	200179	200179	200179

* When placing an order please advise voltage
** On request 110 V available
*** Attention: Reduced clamping force! Please refer to the clamping force value marked on the roller.

SLUB-A

Self-centering Steady Rests
Standard Line

Extra compact with side mounted cylinder
Additional pivoting upper arm for vertical loading

- **Monitoring open/ closed via proximity switch**
- **Special sizes on request**

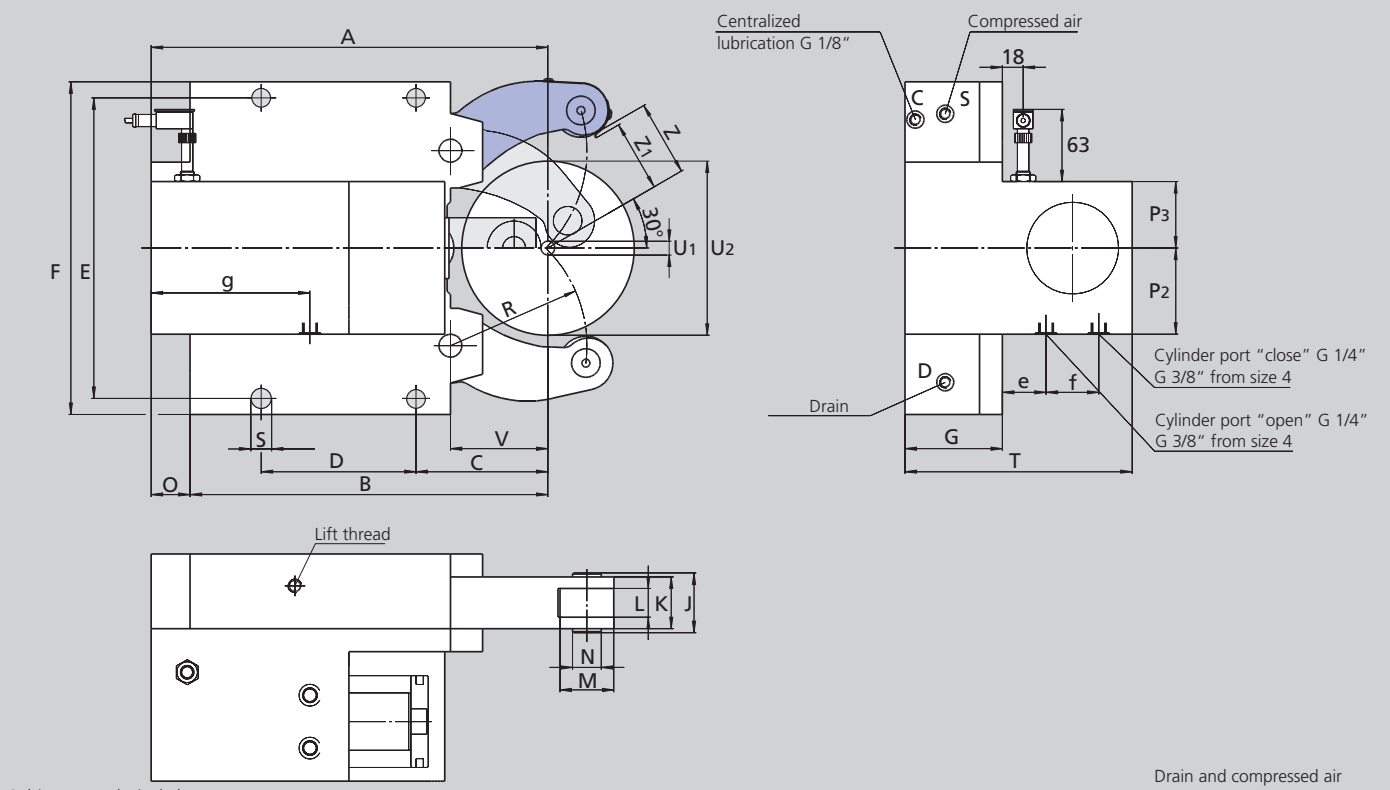

Subject to technical changes.
For more detailed information please ask our customer service.

Drain and compressed air
G 1/8" up to size 3.1
G 1/4" from size 4

SMW-AUTOBLOK Type Size		SLUB-A 3	SLUB-A 3.1	SLUB-A 4	SLUB-A 5	SLUB-A 6
Centering range without chip guard	**U_1**	**12**	**22**	**35**	**50**	**160**
	U_2	**130**	**150**	**220**	**268**	**460****
Centering range with chip guard	U_1	14	22	35	50	160
	U_2	130	150	220	268	460**
Vertical loading without chip guard	**Z**	**66**	**76**	**111**	**135**	**230****
Vertical loading with chip guard	**Z_1**	**62**	**72**	**106.5**	**130**	**225****
	A	346	354	480	600.5	800
	B	312	320	448	510	709
	C	115	123	146	178	215
	D	135	135	240	270	330
	E	262	262	365	400	610/640
	F	290	290	400	440	680
	G	85	85	110	145	145
	J	52	52	67	83	83
	K	45	45	60	75	75
Width of rollers	L	25	25	25	29	29
Diameter of rollers	M	47	47	52	62	80
Diameter of collars	N	25	25	32	36	42
	O	34	34	32	90.5	91
	P_2	75	75	68	85	87
	P_3	58	58	85	85	104
	R	119	124	172	209	290
	S	18	18	23	23	27
	T	198	198	243.5	325	350
	V	85	93	128	160	175
	e	38	38	38.5	79.5	74.5
	f	46	46	66	66	96
	g	138.5	138.5	188	210	230
Piston area*	cm^2	50	50	78	78	132
Operating pressure min/max.	bar	8/60	8/60	8/60	8/80	8/70
Max. clamping force/roller	daN	1000	1000	1500	2000	3000
Centering accuracy within the whole range	mm	0.04	0.04	0.05	0.06	0.06
Repeatability accuracy	mm	0.007	0.007	0.007	0.01	0.01
Max. roller surface speed	m/min	725	725	715	600	560
Weight approx.	kg	45	46	106	175	483

* On request cylinder differing from standard available
** SLUA-B-6: Loading diameter U2 = 460 only under 19° installation

SLUB-A

Self-centering Steady Rests
Standard Line

SLUB-A Steady Rest with stroke control Steady Rest open / closed via proximity switch (without proximity switch)						
Steady Rest size		**3**	**3.1**	**4**	**5**	**6**
SLUB-A-M Manual lubrication	Id. No.	029870	029871	029872	029873	029874
SLUB-A-Z Central lubrication oil	Id. No.	029860	029861	029862	029863	029864
SLUB-A-OLD Central lubrication oil + air	Id. No.	029880	029881	029882	029883	029884

Type SLUB-A

♦ denotes wearing parts, recommended stock items

Steady Rest size			3	3.1	4	5	6
Compact lubrication system for oil pressure lubrication Container 2.7 l, 220 V *,**			088707	088707	088707	088707	088707
Compact lubrication system for oil & air lubrication Container 2.7 l, 220 V *,**			088708	088708	088708	088708	088708
Eccenter fine adjustment compl. at lever arm (2 pcs. per Steady Rest)			018437	018437	018444	018450	026595
Inductive limit switch			087926	087926	087926	087926	087926
Swarf guard 3-pieces		♦	026117	026117	026118	026119	026597
Roller stripper (2-pieces) for middle piece		♦	029797	029797	029798	029799	029800
Rollers cylindrical design		♦	016951	016951	016953	018345	026594
Rollers spherical design		♦	018433	018433	018443	019545	121302
Rollers synthetic material ***		♦	023443	023443	023672	023650	on request
Roller stripper (2-pieces) for middle piece with roller synthetic material		♦	029797	029797	205400	029799	-
Rollers carbide		♦	129225	129225	220918	222038	on request
Adjustment device 1 set = 3 pieces			200178	200178	200179	200179	200179

* When placing an order please advise voltage
** On request 110 V available
*** Attention: Reduced clamping force! Please refer to the clamping force value marked on the roller.

SLU

Self-centering Steady Rests
Basic Line

- **Large clamping range**
- **Monitoring open/closed via proximity switch**
- **Hardened arms**

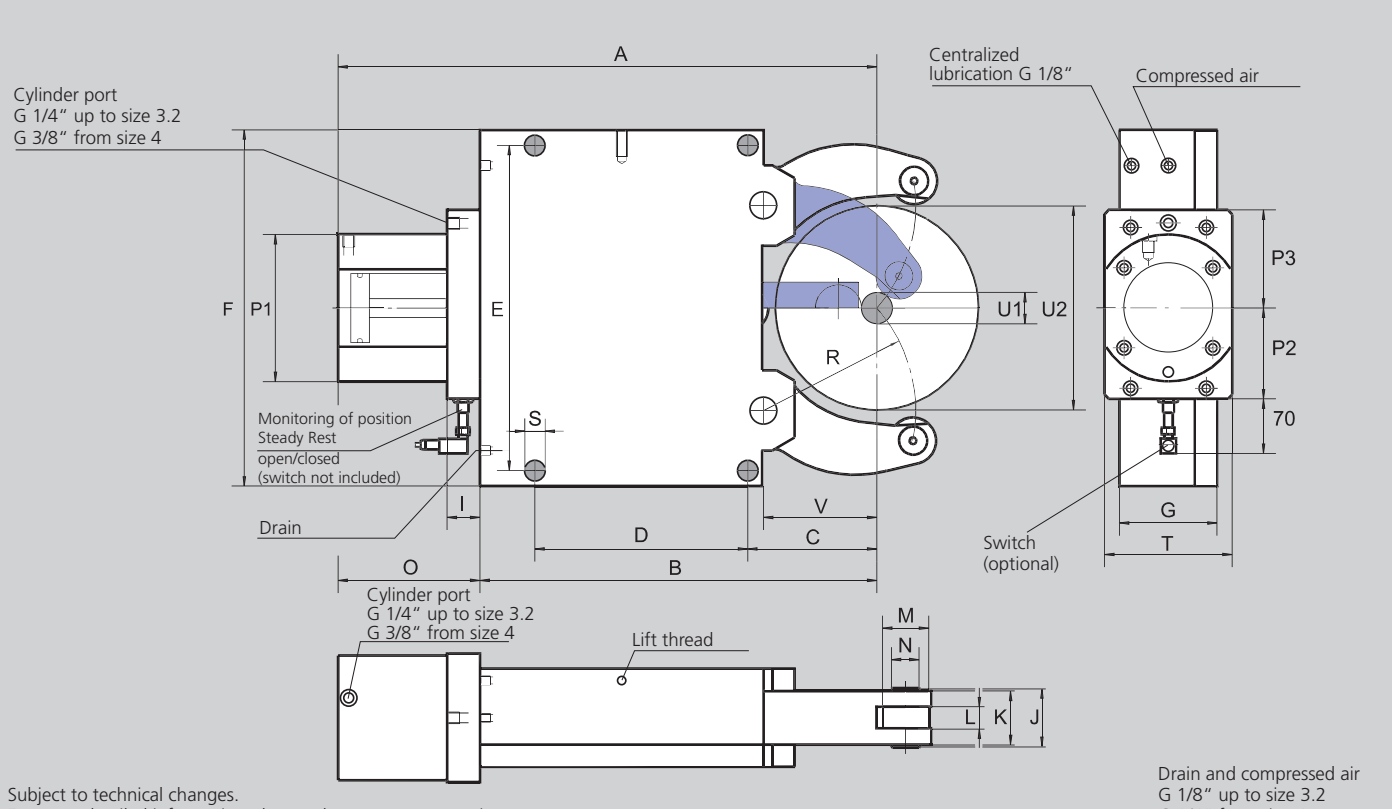

Subject to technical changes.
For more detailed information please ask our customer service.

SMW-AUTOBLOK Type Size		SLU 1	SLU 2	SLU 3	SLU 3.1	SLU 3.2	SLU 4	SLU 5	SLU 5.1	SLU 6
Centering range without chip guard	**U1**	**4**	**8**	**12**	**20**	**50**	**30**	**45**	**85**	**125**
	U2	**64**	**101**	**152**	**165**	**200**	**245**	**310**	**350**	**460**
Centering range with chip guard 3-piece	**U1**	**8**	**12**	**14**	**20**	**50**	**30**	**45**	**85**	**125**
	U2	**64**	**101**	**152**	**165**	**200**	**245**	**310**	**350**	**460**
	A	207	279.5	429	437	455	608	697.5	717.5	944.5
	B	137	195	312	320	335	448	510	530	709
	C	51	70	115	123	138	146	178	198	215
	D	64	85	135	135	135	240	270	270	330
	E	118	170	262	262	262	365	400	400	610/640
	F	132	190	290	290	290	400	440	440	680
	G	55	70	85	85	85	110	145	145	145
	I	33	33	37	37	37	37	37	37	37
	J	26	42	52	52	52	67	83	83	83
	K	20	35	45	45	45	60	75	75	75
Width of rollers	L	12	19	25	25	25	25	29	29	29
Diameter of rollers	M	19	35	47	47	47	52	62	62	80
Diameter of collars	N	6	21	25	25	25	32	36	36	42
	O	70	84.5	117	117	120	160	187.5	187.5	235.5
	P1	84	102	137	137	137	165	165	165	190
	P2	66	72	90	90	90	102	102	102	115
	P3	66	75	100	100	100	110	110	110	130
	R	50.5	74	119	124	139	172	209	229	290
	S	11	14	18	18	18	23	23	23	27
	T	70	70	100	100	100	144	144	144	158
	V	37	52	85	93	103	128	160	180	175
Piston area	cm²	7	19.6	50	50	50	78	78	78	132
Operation pressure min./max.	bar	6/50	8/70	8/60	8/60	8/60	8/60	8/80	8/80	8/70
Max. clamping force/roller	daN	100	450	1000	1000	1000	1500	2000	2000	3000
Centering accuracy within the whole range	mm	0.02	0.02	0.04	0.04	0.04	0.05	0.06	0.06	0.06
Repeatability accuracy	mm	0.005	0.005	0.007	0.007	0.007	0.007	0.01	0.01	0.01
Max. roller surface speed	m/min	800	800	725	725	725	715	600	600	560
Weight approx.	kg	6	14	39	40	43	92	152	155	420

SLU

Self-centering Steady Rests
Basic Line

SLU Steady Rest (including 1 set of SMW-AUTOBLOK cylindrical rollers)										
Steady Rest size		**1**	**2**	**3**	**3.1**	**3.2**	**4**	**5**	**5.1**	**6**
SLU-M Manual lubrication	Id. No.	025804	025805	025806	025807	120689	122186	122416	122469	026586
SLU-Z Central lubrication oil	Id. No.	025457	025402	025401	025406	120690	122185	122415	122468	026492
SLU-OLD Central lubrication oil + air	Id. No.	027649	027650	027651	027652	120691	122187	122417	122470	027655

Type SLU

♦ denotes wearing parts, recommended stock items

Steady Rest size		**1**	**2**	**3**	**3.1**	**3.2**	**4**	**5**	**5.1**	**6**
Compact lubrication system for oil pressure lubrication Container 2.7 l, 220 V *,**		088707	088707	088707	088707	088707	088707	088707	088707	088707
Eccenter fine adjustment compl. at lever arm (2 pcs. per Steady Rest) manual/central lubrication		-	026120	018437	018437	018437	018444	018450	018450	026595
Inductive limit switch		087926	087926	087926	087926	087926	087926	087926	087926	087926
Swarf guard 3-pieces	♦	026115	026116	026117	026117	026117	026118	026119	026119	026597
Spring loaded chip-guard	♦	026336	025760	025759	025759	025759	025758	025757	025757	026596
Roller stripper (2-pieces) for middle piece	♦	029795	029796	029797	029797	029797	029798	029799	029799	029800
Rollers cylindrical design	♦	017869	016952	016951	016951	016951	016953	018345	018345	026594
Rollers spherical design	♦	016900	017658	018433	018433	018433	018443	019545	019545	121302
Rollers synthetic material ***	♦	024409	029451	023443	023443	023443	023672	023650	023650	on request
Roller stripper (2-pieces) for middle piece with roller synthetic material	♦	029795	197520	029797	029797	029797	205400	029799	029799	-
Rollers carbide	♦	128794	129223	129225	129225	129225	220918	222038	222038	on request
Adjustment device 1 set = 3 pieces		-	-	200178	200178	200178	200179	200179	200179	200179

* When placing an order please advise voltage
** On request 110 V available
*** Attention: Reduced clamping force! Please refer to the clamping force value marked on the roller.

SLU-A

Self-centering Steady Rests
Basic Line

- **Additional pivoting upper arm**
- **Monitoring of position Steady Rest open and closed**
- **Hardened arms**

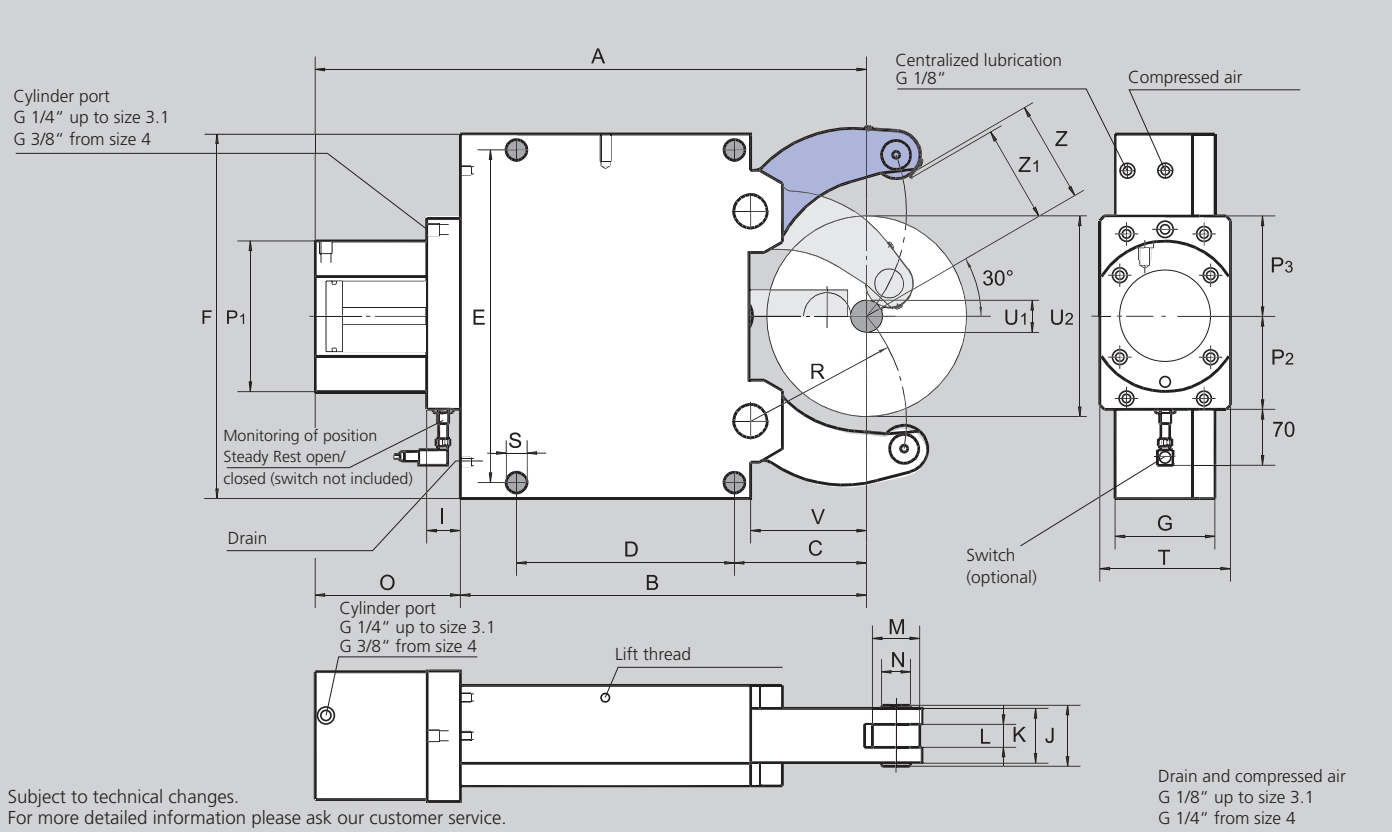

Subject to technical changes.
For more detailed information please ask our customer service.

SMW-AUTOBLOK Type Size		SLU-A 1	SLU-A 2	SLU-A 3	SLU-A 3.1	SLU-A 4	SLU-A 5	SLU-A 6
Centering range without chip guard	**U_1**	**4**	**8**	**12**	**22**	**30**	**45**	**160**
	U_2	**52**	**80**	**130**	**150**	**220**	**268**	**460 ***
Centering range with chip guard 3-piece	**U_1**	**8**	**12**	**14**	**22**	**30**	**50**	**160**
	U_2	**52**	**80**	**130**	**150**	**220**	**268**	**460**
	Z	**26.5**	**41**	**66**	**76**	**111**	**135**	**230 ***
	Z_1	**24**	**34**	**62**	**72**	**106.5**	**130**	**225 ***
	A	207	279.5	429	437	608	697.5	944.5
	B	137	195	312	320	448	510	709
	C	51	70	115	123	146	178	215
	D	64	85	135	135	240	270	330
	E	118	170	262	262	365	400	610/640
	F	132	190	290	290	400	440	680
	G	55	70	85	85	110	145	145
	I	33	33	37	37	37	37	37
	J	26	42	52	52	67	83	83
	K	20	35	45	45	60	75	75
Width of rollers	L	12	19	25	25	25	29	29
Diameter of rollers	M	19	35	47	47	52	62	80
Diameter of collars	N	6	21	25	25	32	36	42
	O	70	84.5	117	117	160	187.5	235.5
	P_1	84	102	137	137	165	165	190
	P_2	66	72	90	90	102	102	115
	P_3	66	75	100	100	110	110	130
	R	50.5	74	119	124	172	209	290
	S	11	14	18	18	23	23	27
	T	70	70	100	100	144	144	158
	V	37	52	85	93	128	160	175
Piston area	cm^2	7	19.6	50	50	78	78	132
Operation pressure min./max.	bar	6/50	8/70	8/60	8/60	8/60	8/80	8/70
Max. clamping force/roller	daN	100	450	1000	1000	1500	2000	3000
Centering accuracy within the whole range	mm	0.02	0.02	0.04	0.04	0.05	0.06	0.06
Repeatability accuracy	mm	0.005	0.005	0.007	0.007	0.007	0.01	0.01
Max. roller surface speed	m/min	800	800	725	725	715	600	560
Weight approx.	kg	6	14	39	40	92	152	420

* SLU-A 6: loading diameter U2=460 only under 19° installation

SLU-A

Self-centering Steady Rests
Basic Line

SLU-A Steady Rest (including 1 set of SMW-AUTOBLOK cylindrical rollers)								
Steady Rest size		**1**	**2**	**3**	**3.1**	**4**	**5**	**6**
SLU-A-M Manual lubrication	Id. No.	024458	024459	024460	024461	122546	024463	026591
SLU-A-Z Central lubrication oil	Id. No.	024482	024483	024673	024674	122545	024485	026593
SLU-A-OLD Central lubrication oil + air	Id. No.	027656	027657	027658	027659	122547	027661	027662

Type SLU-A

♦ denotes wearing parts, recommended stock items

Steady Rest size	**1**	**2**	**3**	**3.1**	**4**	**5**	**6**
Compact lubrication system for oil pressure lubrication Container 2.7 l, 220 V *,**	088707	088707	088707	088707	088707	088707	088707
Eccenter fine adjustment compl. at lever arm (2 pcs. per Steady Rest) manual/central lubrication	-	026120	018437	018437	018444	018450	026595
Inductive limit switch	087926	087926	087926	087926	087926	087926	087926
Swarf guard 3-pieces ♦	026115	026116	026117	026117	026118	026119	026597
Spring loaded chip-guard ♦	026336	025760	025759	025759	025758	025757	026596
Roller stripper (2-pieces) for middle piece ♦	029795	029796	029797	029797	029798	029799	029800
Rollers cylindrical design ♦	017869	016952	016951	016951	016953	018345	026594
Rollers spherical design ♦	016900	017658	018433	018433	018443	019545	121302
Rollers synthetic material *** ♦	024409	029451	023443	023443	023672	023650	on request
Roller stripper (2-pieces) for middle piece with roller synthetic material ♦	029795	197520	029797	029797	205400	029799	-
Rollers carbide ♦	128794	129223	129225	129225	220918	222038	on request
Adjustment device 1 set = 3 pieces	-	-	200178	200178	200179	200179	200179

* When placing an order please advise voltage
** On request 110 V available
*** Attention: Reduced clamping force! Please refer to the clamping force value marked on the roller.

SR®

Self-centering Steady Rests
Premium Line

- **Sealed body**
- **Integrated coolant flush**
- **Chip guard with coolant nozzles**
- **Stroke control unit or proximity switch for end position open**

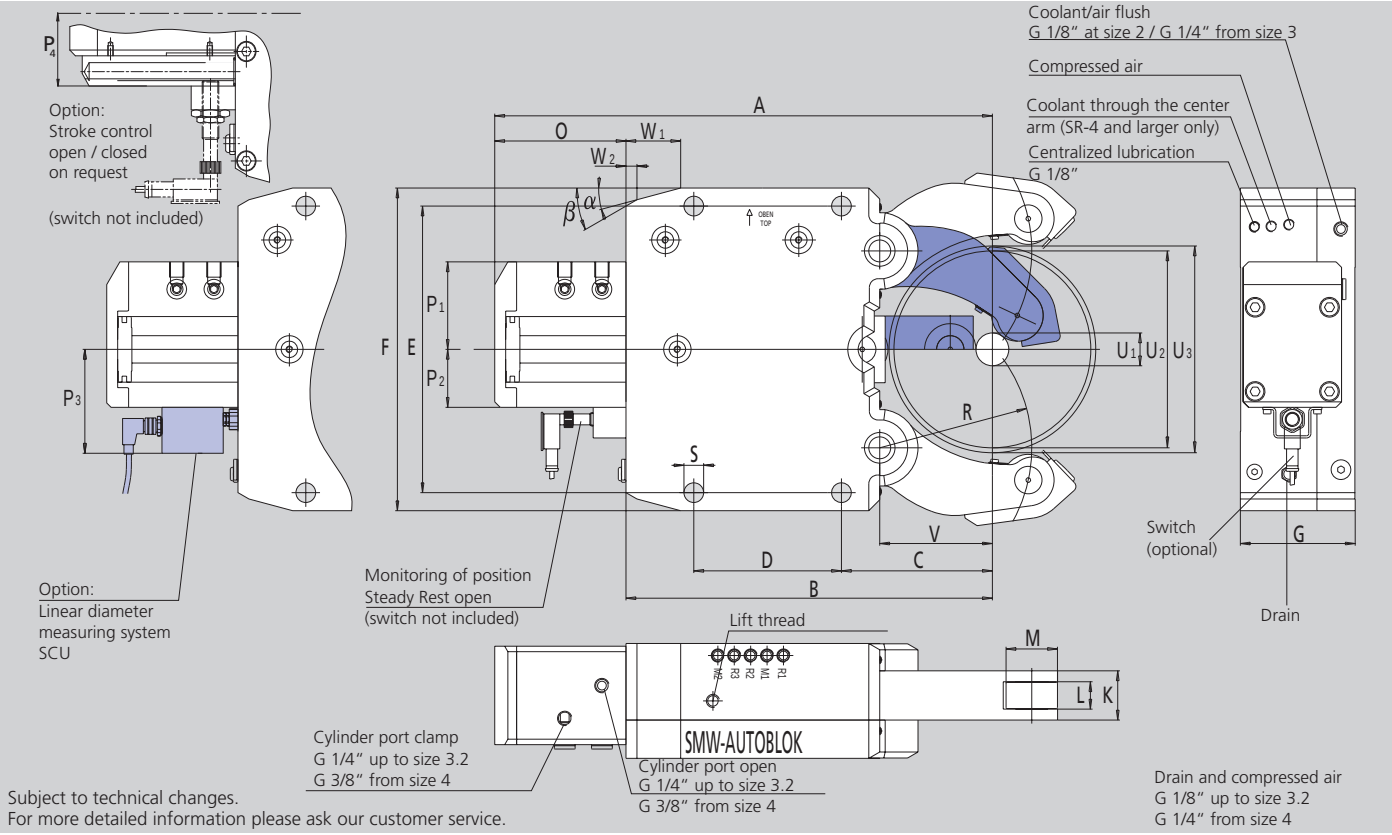

SMW-AUTOBLOK Type Size		SR 2	SR 3	SR 3.1	SR 3.2	SR 4	SR 5	SR 5.1	SR 6
Centering range with coolant chip guard	**U_1**	**20 (8*)**	**28 (12*)**	**25 (20*)**	**50**	**30**	**45**	**85**	**125**
	U_2	**101 (92**)**	**152**	**165**	**200**	**245**	**310**	**350**	**460**
Max. axial clearing diameter	**U_3**	**106**	**162**	**172**	**202**	**253**	**320**	**352**	**466**
	A	277	428	436	455	603	697	717	953.5
	B	195	312	320	335	448	510	530	715
	C	70	115	123	138	146	178	198	215
	D	85	135	135	135	240	270	270	330
	E	170	262	262	262	365	400	400	610/640
	F	195	295	295	295	405	440	440	680
	G	75	105	105	105	125	150	150	175
	K	35	45	45	45	60	75	75	85
Width of rollers	L	19	25	25	25	25	29	29	32
Diameter of rollers	M	35	47	47	47	52	62	62	90
	O	82	116	116	120	155	187	187	238.5
	P_1	63	85	85	85	91	97	97	122
	P_2	40	53	53	53	61	63	63	88
	P_3	82	95	95	95	103	105	105	130
	P_4	61	74	74	74	82	84	84	109
	R	74	119	124	139	172	209	229	290
	S	14	18	18	18	23	23	23	27
	V	51	85	93	103	128	160	180	190
	W_1	30	50	50	50	58	62	62	100
	W_2	11.2	10	10	10	18.3	19.1	19.1	22
	α	15°	15°	15°	15°	15°	18°	18°	10°
	β	30°	30°	30°	30°	40°	40°	40°	50°
Piston area***	cm²	19.6	38.5	38.5	38.5	63.6	78.5	78.5	176.7
Operating pressure min./max.	bar	8/70	8/80	8/80	8/80	8/70	8/80	8/80	8/75
Max. clamping force/roller	daN	450	1000	1000	1000	1500	2000	2000	4500
Centering accuracy within the whole range	mm	0.02	0.04	0.04	0.04	0.05	0.06	0.06	0.06
Repeatability accuracy	mm	0.005	0.007	0.007	0.007	0.007	0.01	0.01	0.01
Max. roller surface speed	m/min	800	725	725	725	715	600	600	560
Weight approx.	kg	14	56	57	59	117	174	178	436

* The Steady Rest can be modified to this clamping range if the coolant chip guard is not used
** Can be loaded axially. Radial loading with chip guard Ø 92, without chip guard Ø 101
*** Cylinder sizes different from standard available on request

SR Steady Rest with stroke control Steady Rest open via proximity switch (without proximity switch)***									
Steady Rest size		**2**	**3**	**3.1**	**3.2**	**4**	**5**	**5.1**	**6**
SR-M Manual lubrication	Id. No.	128161	128167	128184	127511	127001	128001	128039	128426
SR-Z Central lubrication oil	Id. No.	128160	128166	128185	127510	127000	128000	128038	128425
SR-OLD Central lubrication oil + air	Id. No.	128162	128168	128186	127512	127002	128002	128040	128427
SR-F Central grease lubrication	Id. No.	225568	on request	222282	on request	on request	on request	on request	on request

SR Steady Rest with stroke control via linear stroke control SCU, output 4–20 mA									
Steady Rest size		**2**	**3**	**3.1**	**3.2**	**4**	**5**	**5.1**	**6**
SR-M Manual lubrication	Id. No.	on request	128169	128187	126559	127017	128017	128046	128451
SR-Z Central lubrication oil	Id. No.	220432	128170	128188	126560	127016	128016	128045	128450
SR-OLD Central lubrication oil + air	Id. No.	on request	128171	128189	126561	127018	128018	128047	128452
SR-F Central grease lubrication	Id. No.	on request	on request	on request	on request	on request	on request	on request	on request

SR Steady Rest with stroke control via linear stroke control SCU, output 0-10 V									
Steady Rest size		**2**	**3**	**3.1**	**3.2**	**4**	**5**	**5.1**	**6**
SR-M Manual lubrication	Id. No.	on request	128172	128190	126563	127022	128021	128049	128453
SR-Z Central lubrication oil	Id. No.	220434	128173	128191	126564	127021	128020	128048	128454
SR-OLD Central lubrication oil + air	Id. No.	on request	128174	128192	126565	127023	128022	128050	128455
SR-F Central grease lubrication	Id. No.	on request	on request	on request	on request	on request	on request	on request	on request

Type SR

♦ denotes wearing parts, recommended stock items

Steady Rest size		**2**	**3**	**3.1**	**3.2**	**4**	**5**	**5.1**	**6**
Compact lubrication system for oil pressure lubrication Container 2.7 l, 220 V *,**		088707	088707	088707	088707	088707	088707	088707	088707
Compact lubrication system for oil + air lubrication Container 2.7 l, 220 V *,**		088708	088708	088708	088708	088708	088708	088708	088708
Eccenter fine adjustment compl. at lever arm (2 pieces per Steady Rest) manual/central lubrication		127237	127240	127240	127240	128474	128584	128584	128585
Inductive limit switch		087926	087926	087926	087926	087926	087926	087926	087926
Swarf guard coolant/air with wiper		128106	124024	124024	124024	125797	125816	125816	128442
Wiper for swarf guard coolant/air	♦	128108	124026	124026	124026	126904	126888	126888	128444
Swarf guard 3-pieces	♦	026116	026117	026117	-	-	-	-	-
Roller stripper for middle piece	♦	200154	198950	198950	198950	200151	200152	200152	200153
Roller cylindrical design	♦	016952	016951	016951	016951	016953	018345	018345	028971
Roller spherical design	♦	017658	018433	018433	018433	018443	019545	019545	129825
Roller synthetic material ****	♦	029451	023443	023443	023443	023672	023650	023650	on request
Roller stripper (2-pieces) for middle piece with roller synthetic material	♦	204211	204212	204212	204212	204214	204216	204216	-
Roller carbide	♦	129223	129225	129225	129225	220918	222038	222038	on request
Adjustment device 1 set = 3 pieces		-	200178	200178	200178	200179	200179	200179	200179

* When placing an order, please advise voltage
* * On request 110 V available
*** Stroke control open / closed on request
**** Attention: Reduced clamping force! Please refer to the clamping force value marked on the roller.

SRA

Self-centering Steady Rests
Premium Line

Additional pivoting upper arm for vertical loading

- Sealed body
- Integrated coolant flush
- Chip guard with coolant nozzles
- Stroke control unit or proximity switch for end position open

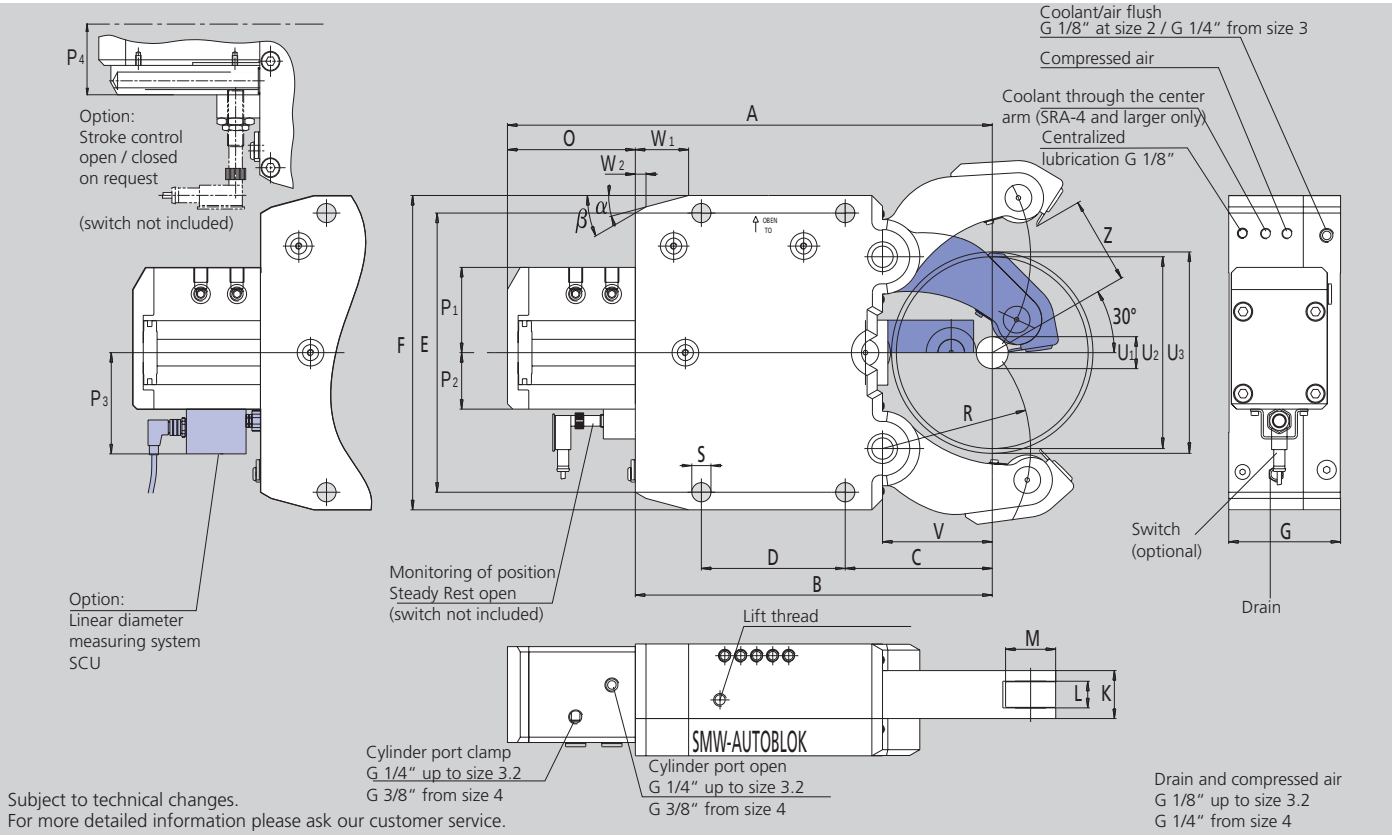

SMW-AUTOBLOK Type Size		SRA 2	SRA 3	SRA 3.1	SRA 4	SRA 5	SRA 6
Centering range with coolant chip guard	**U_1**	**20 (8*)**	**28 (12*)**	**25 (22*)**	**30**	**45**	**175**
	U_2	**80**	**130**	**150**	**220**	**268**	**460**
Max. axial clearing diameter	**U_3**	**99**	**162**	**168**	**253**	**295**	**466**
Vertical loading without chip guard	**Z**	**35**	**58**	**68**	**103**	**121**	**215****
	A	277	428	436	603	697	953.5
	B	195	312	320	448	510	715
	C	70	115	123	146	178	215
	D	85	135	135	240	270	330
	E	170	262	262	365	400	680
	F	195	295	295	405	440	610/640
	G	75	105	105	125	150	175
	K	35	45	45	60	75	85
Width of rollers	L	19	25	25	25	29	32
Diameter of rollers	M	35	47	47	52	62	90
	O	82	116	116	155	187	238.5
	P_1	63	85	85	91	97	122
	P_2	40	53	53	61	63	88
	P_3	82	95	95	103	105	130
	P_4	61	74	74	82	84	109
	R	74	119	124	172	209	290
	S	14	18	18	23	23	27
	V	51	85	93	128	160	190
	W_1	30	50	50	58	62	100
	W_2	11.2	10	10	18.3	19.1	22
	α	15°	15°	15°	15°	18°	10°
	β	30°	30°	30°	40°	40°	50°
Piston area***	cm²	19.6	38.5	38.5	63.6	78.5	176.7
Operating pressure min./max.	bar	70	80	80	70	80	75
Max. clamping force/roller	daN	450	1000	1000	1500	2000	4500
Centering accuracy within the whole range	mm	0.02	0.04	0.04	0.05	0.06	0.06
Repeatability accuracy	mm	0.005	0.007	0.007	0.007	0.01	0.01
Max. roller surface speed	m/min	800	725	725	715	600	560
Weight approx.	kg	14	56	57	117	174	436

* The Steady Rest can be modified to this clamping range if the coolant chip guard is not used
** SRA-6: Loading diameter only under 19° installation
*** Cylinder sizes different from standard available on request

SRA

Self-centering Steady Rests
Premium Line

SRA Steady Rest with stroke control Steady Rest open via proximity switch (without proximity switch)***							
Steady Rest size		**2**	**3**	**3.1**	**4**	**5**	**6**
SRA-M Manual lubrication	Id. No.	128163	128175	128193	127025	128025	128457
SRA-Z Central lubrication oil	Id. No.	128164	128176	128194	127024	128024	128456
SRA-OLD Central lubrication oil + air	Id. No.	128165	128177	128195	127026	128026	128458
SRA-F Central grease lubrication	Id. No.	on request	on request	on request	on request	on request	on request

SRA Steady Rest with stroke control via linear stroke control SCU, output 4–20 mA							
Steady Rest size		**2**	**3**	**3.1**	**4**	**5**	**6**
SRA-M Manual lubrication	Id. No.	on request	128178	128196	127031	128031	128467
SRA-Z Central lubrication oil	Id. No.	on request	128179	128197	127030	128030	128468
SRA-OLD Central lubrication oil + air	Id. No.	on request	128180	128198	127032	128032	128469
SRA-F Central grease lubrication	Id. No.	on request	on request	on request	on request	on request	on request

SRA Steady Rest with stroke control via linear stroke control SCU, output 0-10 V							
Steady Rest size		**2**	**3**	**3.1**	**4**	**5**	**6**
SRA-M Manual lubrication	Id. No.	on request	128181	128199	127034	128035	128471
SRA-Z Central lubrication oil	Id. No.	on request	128182	128200	127033	128034	128470
SRA-OLD Central lubrication oil + air	Id. No.	on request	128183	128201	127035	128036	128472
SRA-F Central grease lubrication	Id. No.	on request	on request	on request	on request	on request	on request

Type SRA

♦ denotes wearing parts, recommended stock items

Steady Rest size		**2**	**3**	**3.1**	**4**	**5**	**6**
Compact lubrication system for oil pressure lubrication Container 2.7 l, 220 V *,**		088707	088707	088707	088707	088707	088707
Compact lubrication system for oil + air lubrication Container 2.7 l, 220 V *,**		088708	088708	088708	088708	088708	088708
Eccenter fine adjustment compl. at lever arm (2 pieces per steady rest) manual/central lubrication		127237	127240	127240	128474	128584	128585
Inductive limit switch		087926	087926	087926	087926	087926	087926
Swarf guard coolant/air with wiper		128106	124024	124024	125797	125816	128442
Wiper for swarf guard coolant/air	♦	128108	124026	124026	126904	126888	128444
Swarf guard 3-pieces	♦	026116	026117	026117	-	-	-
Roller stripper 2-pieces for middle piece	♦	200154	198950	198950	200151	200152	200153
Roller cylindrical design	♦	016952	016951	016951	016953	018345	028971
Roller spherical design	♦	017658	018433	018433	018443	019545	129825
Roller synthetic material ****	♦	029451	023443	023443	023672	023650	on request
Roller stripper (2-pieces) for middle piece with roller synthetic material	♦	204211	204212	204212	204214	204216	-
Roller carbide	♦	129223	129225	129225	220918	222038	on request
Adjustment device 1 set = 3 pieces		-	200178	200178	200179	200179	200179

* When placing an order, please advise voltage
* * On request 110 V available
*** Stroke control open / closed on request
**** Attention: Reduced clamping force! Please refer to the clamping force value marked on the roller.

SR-CL

Self-centering Steady Rests
Premium Line – with fine adjustment

- **With fine adjustment of the clamped workpiece**
- **Sealed body**
- **Integrated coolant flush**
- **Chip guard with coolant nozzles**

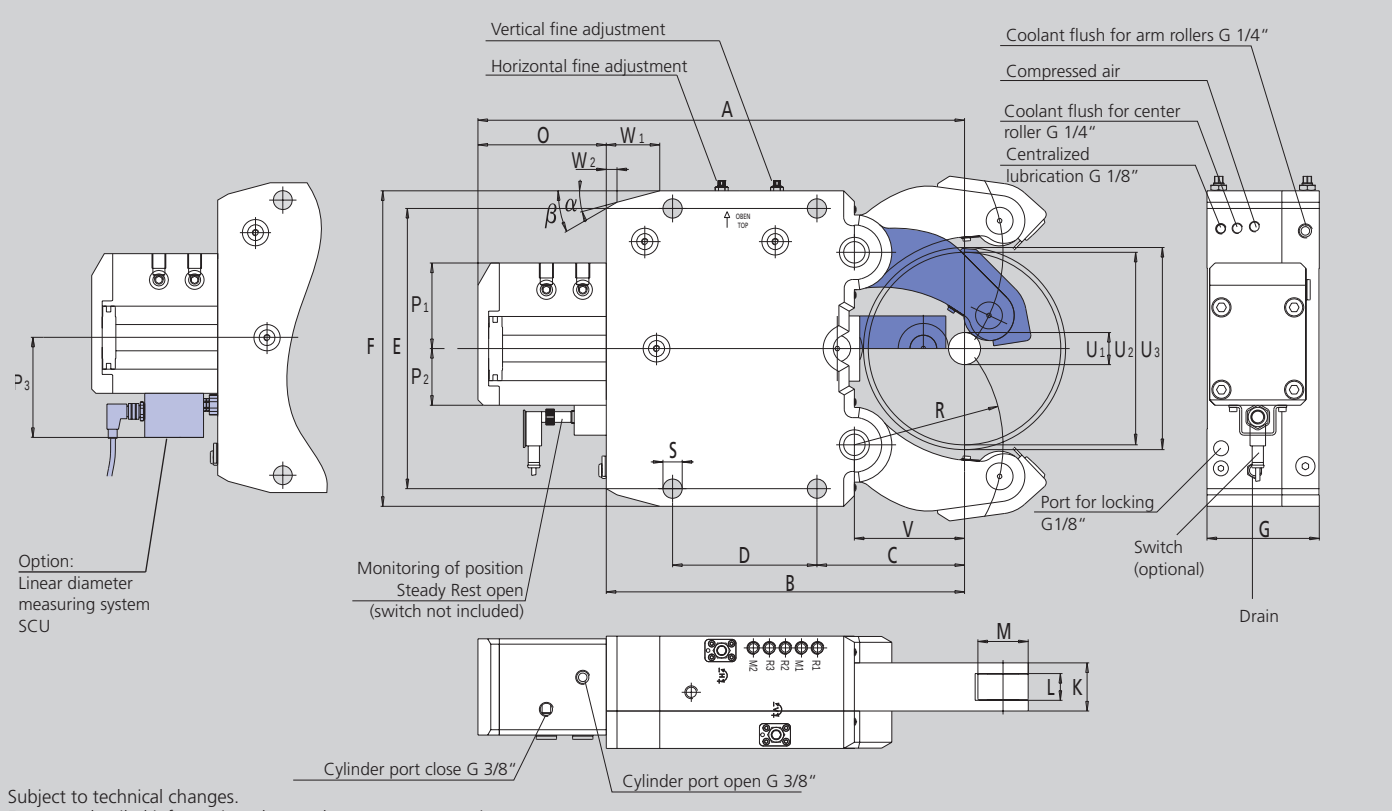

Subject to technical changes.
For more detailed information please ask our customer service.

Drain and compressed air G 1/4"

SMW-AUTOBLOK Type Size		SR-CL 4	SR-CL 5	SR-CL 5.1	SR-CL 6
Id. No.		**222070**	**222071**	**222072**	**222073**
Centering range with coolant chip guard	**U_1**	**30**	**45**	**85**	**125**
	U_2	**245**	**310**	**350**	**460**
Max. axial clearing diameter	**U_3**	**253**	**320**	**352**	**466**
Horizontal adjustment range	**mm**	**± 0.3**	**± 0.4**	**± 0.4**	**± 0.5**
Vertical adjustment range	**mm**	**± 0.3**	**± 0.4**	**± 0.4**	**± 0.5**
	A	603	697	717	953.5
	B	448	510	530	715
	C	146	178	198	215
	D	240	270	270	330
	E	365	400	400	610
	F	405	440	440	680
	G	130	155	155	180
	K	60	75	75	85
Width of rollers	L	25	29	29	32
Diameter of rollers	M	52	62	62	90
	O	155	187	187	238.5
	P_1	91	97	97	122
	P_2	61	63	63	88
	P_3	103	105	105	130
	R	172	209	229	290
	S	23	23	23	27
	V	128	160	180	190
	W_1	58	62	62	22
	W_2	18.3	19.1	19.1	100
	α	15°	18°	18°	10°
	β	40°	40°	40°	50°
Piston area	cm^2	63.6	78.5	78.5	176.7
Operating pressure min./max.	bar	8/70	8/80	8/80	8/75
Max. clamping force/roller	daN	1500	2000	2000	4500
Centering accuracy within the whole range	mm	0.05	0.06	0.06	0.06
Repeatability accuracy	mm	0.007	0.01	0.01	0.01
Max. roller surface speed	m/min	715	600	600	560
Mass	kg	121	178	182	441

SR-CL

Self-centering Steady Rests
Premium Line – with fine adjustment

SR-CL Steady Rest with stroke control Steady Rest open via proximity switch (without proximity switch)					
Steady Rest size		**4**	**5**	**5.1**	**6**
SR-CL-M Manual lubrication	Id. No.	on request	on request	on request	on request
SR-CL-Z Central lubrication oil	Id. No.	222070	222071	222072	222073
SR-CL-OLD Central lubrication oil + air	Id. No.	on request	on request	on request	on request
SR-CL-F Central grease lubrication	Id. No.	on request	on request	on request	on request

SR-CL Steady Rest with stroke control via linear stroke control SCU, output 4-20 mA					
Steady Rest size		**4**	**5**	**5.1**	**6**
SR-CL-M Manual lubrication	Id. No.	on request	on request	on request	on request
SR-CL-Z Central lubrication oil	Id. No.	on request	on request	on request	on request
SR-CL-OLD Central lubrication oil + air	Id. No.	on request	on request	on request	on request
SR-CL-F Central grease lubrication	Id. No.	on request	on request	on request	on request

SR-CL Steady Rest with stroke control via linear stroke control SCU, output 0-10 V					
Steady Rest size		**4**	**5**	**5.1**	**6**
SR-CL-M Manual lubrication	Id. No.	on request	on request	on request	on request
SR-CL-Z Central lubrication oil	Id. No.	on request	on request	on request	on request
SR-CL-OLD Central lubrication oil + air	Id. No.	on request	on request	on request	on request
SR-CL-F Central grease lubrication	Id. No.	on request	on request	on request	on request

Type SR-CL

♦ denotes wearing parts, recommended stock items

Steady Rest size		4	5	5.1	6
Compact lubrication system for oil pressure lubrication Container 2.7 l, 220 V *,**		088707	088707	088707	088707
Compact lubrication system for oil + air lubrication Container 2.7 l, 220 V *,**		088708	088708	088708	088708
Inductive limit switch		087926	087926	087926	087926
Swarf guard coolant/air with wiper		125797	125816	125816	128442
Wiper for swarf guard coolant/air	♦	126904	126888	126888	128444
Roller stripper 2-pieces for middle piece	♦	200151	200152	200152	200153
Roller cylindrical design	♦	016953	018345	018345	028971
Roller spherical design	♦	018443	019545	019545	129825
Roller synthetic material ***	♦	023672	023650	023650	on request
Roller stripper (2-pieces) for middle piece with roller synthetic material	♦	204214	204216	204216	-
Roller carbide	♦	220918	222038	222038	on request
Adjustment device 1 set = 3 pieces		200179	200179	200179	200179

* When placing an order, please advise voltage
** On request 110 V available
*** Attention: Reduced clamping force! Please refer to the clamping force value marked on the roller.

K

Self-centering Steady Rests
Premium Line

Compact design

- **Sealed body**
- **Chip guard with coolant nozzles**
- **Stroke control unit or proximity switches**

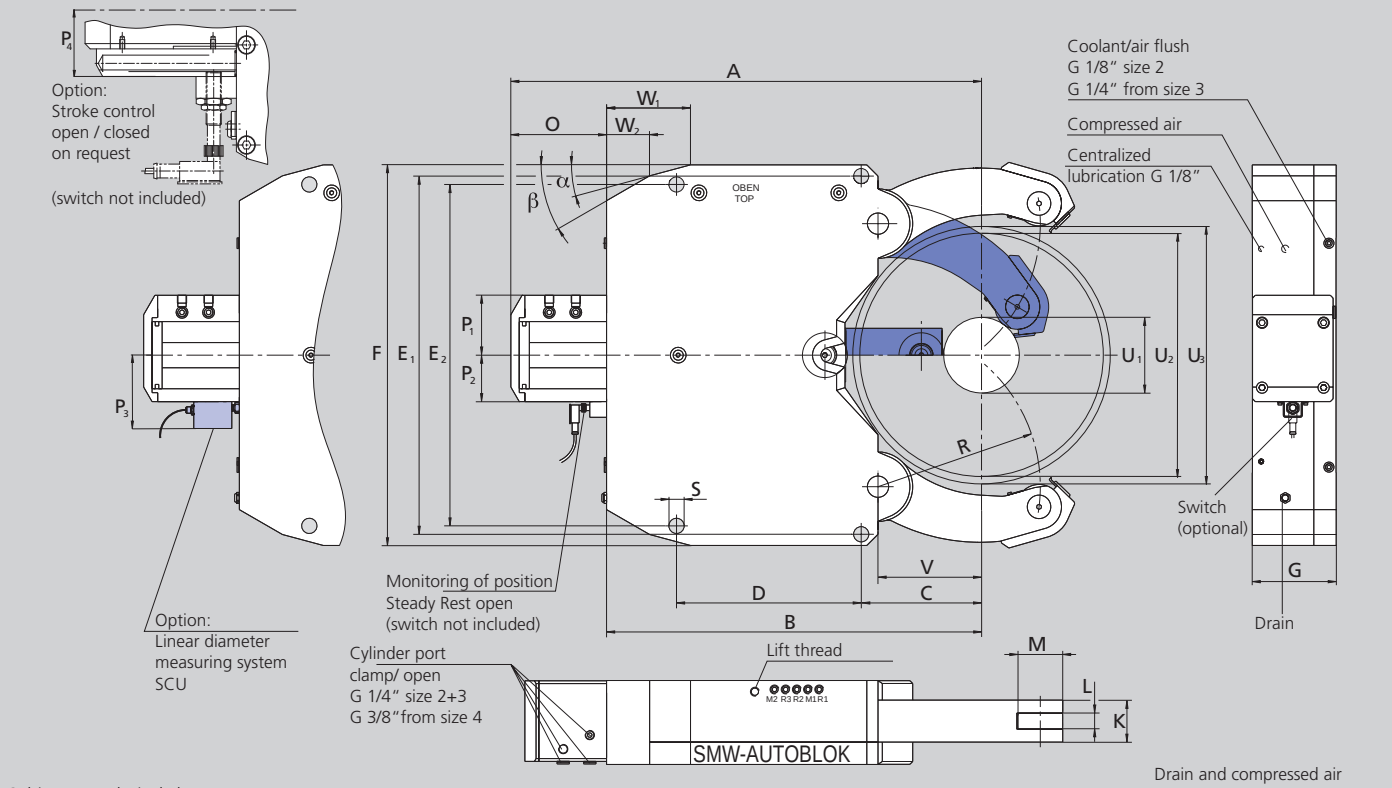

Subject to technical changes.
For more detailed information please ask our customer service.

SMW-AUTOBLOK Type Size		K 2	K 3	K 4	K 4.1	K 5	K 5.1	K 6	K 6.1
Centering range with coolant chip guard	**U1**	**25**	**65**	**52**	**90**	**80**	**100**	**135**	**215**
	U2	**180**	**235**	**280**	**330**	**390**	**410**	**460**	**510**
Max. axial clearing diameter	**U3**	**188**	**242**	**285**	**331**	**404**	**424**	**464**	**512**
	A	400	443	582	612	753	763	816	815.5
	B	305	355	460	490	607	617	670	680
	C	120	150	168	198	230	240	215	245
	D	120	140	180	180	240	240	330	300
	E1	270	312	360	360	445	445	640	640
	E2	270	312	360	360	445	445	610	610
	F	295	345	400	400	485	485	680	680
	G	75	105	125	125	150	150	150	150
	K	35	45	60	60	75	75	75	75
Width of rollers	L	19	25	25	25	29	29	29	29
Diameter of rollers	M	35	47	52	52	62	62	80	80
	O	95	88	122	122	146	146	146	135.5
	P1	63	92	91	91	97	97	107	107
	P2	40	62	67	67	73	73	83	83
	P3	82	104	109	109	115	115	125	125
	P4	-	-	91	91	97	97	107	107
	R	124	155	200	228	265	275	290	310
	S	14	18	23	23	23	23	27	27
	V	90	115	140	170	195	205	185	215
	W1	50	50	110	110	130	130	150	155
	α	10	15°	15°	15°	15°	15°	15°	20°
	W2	26.1	10	59.8	59.8	50.6	50.6	77	87.1
	β	35°	30°	30°	30°	30°	30°	30°	30°
Piston area*	cm²	19.6	38.5	63	63	78	78	113	113
Operating pressure min./max.	bar	8/70	8/80	8/70	8/70	8/80	8/80	8/80	8/80
Max. clamping force/roller	daN	450	1000	1500	1500	2000	2000	3000	3000
Centering accuracy w. the whole range	mm	0.03	0.05	0.06	0.06	0.07	0.07	0.07	0.07
Repeatability accuracy	mm	0.005	0.007	0.007	0.007	0.01	0.01	0.01	0.01
Max. roller surface speed	m/min	800	725	715	715	600	600	560	560
Weight approx.	kg	52	64	114	116	209	209	335	330

* Cylinders differing from standard available on request

K Steady Rest with stroke control Steady Rest open via proximity switch (without proximity switch)***									
Steady Rest size		**2**	**3**	**4**	**4.1**	**5**	**5.1**	**6**	**6.1**
K-M Manual lubrication	Id. No.	223566	127251	129901	129121	127485	127559	127491	127497
K-Z Central lubrication oil	Id. No.	223565	127252	129900	129120	127484	127558	127490	127496
K-OLD Central lubrication oil + air	Id. No.	223567	127253	129902	129122	127486	127560	127492	127498
K-F Central grease lubrication	Id. No.	223568	220200	129903	129400	221815	221100	223494	223495

K Steady Rest with stroke control via linear stroke control SCU, output 4-20 mA									
Steady Rest size		**2**	**3**	**4**	**4.1**	**5**	**5.1**	**6**	**6.1**
K-M Manual lubrication	Id. No.	on request	127266	221401	221409	124981	124984	124987	124990
K-Z Central lubrication oil	Id. No.	on request	127265	221400	221408	124980	124983	124986	124989
K-OLD Central lubrication oil + air	Id. No.	on request	127267	221402	221410	124982	124985	124988	124991
K-F Central grease lubrication	Id. No.	on request	on request	221403	221411	on request	on request	on request	on request

K Steady Rest with stroke control via linear stroke control SCU, output 0-10 V									
Steady Rest size		**2**	**3**	**4**	**4.1**	**5**	**5.1**	**6**	**6.1**
K-M Manual lubrication	Id. No.	on request	127269	221405	221413	125120	125123	125126	125129
K-Z Central lubrication oil	Id. No.	on request	127268	221404	221412	125119	125122	125125	125128
K-OLD Central lubrication oil + air	Id. No.	on request	127270	221406	221414	125121	125124	125127	125130
K-F Central grease lubrication	Id. No.	on request	on request	221407	221415	on request	on request	on request	on request

Type K

♦ denotes wearing parts, recommended stock items

Steady Rest size		**2**	**3**	**4**	**4.1**	**5**	**5.1**	**6**	**6.1**
Compact lubrication system for oil pressure lubrication Container 2.7 l, 220 V *,**		088707	088707	088707	088707	088707	088707	088707	088707
Compact lubrication system for oil + air lubrication Container 2.7 l, 220 V *,**		088708	088708	088708	088708	088708	088708	088708	088708
Eccenter fine adjustment compl. at lever arm (2 pcs. per Steady Rest) manual/central lubrication		127237	127240	128474	128474	125612	125612	124894	124894
Inductive limit switch		087926	087926	087926	087926	087926	087926	087926	087926
Swarf guard coolant/air with wiper		128106	124024	125797	125797	125816	125816	125837	125837
Wiper for swarf guard coolant/air	♦	128108	124026	126904	126904	126888	126888	126694	126694
Roller stripper for middle piece	♦	200154	198950	200151	200151	200152	200152	203268	203268
Roller cylindrical design	♦	016952	016951	016953	016953	018345	018345	026594	026594
Roller spherical design	♦	017658	018433	018443	018443	019545	019545	121302	121302
Roller synthetic material ****	♦	029451	023443	023672	023672	023650	023650	on request	on request
Roller stripper (2-pieces) for middle piece with roller synthetic material	♦	204211	204212	204214	204214	204216	204216	-	-
Roller carbide	♦	129223	129225	220918	220918	222038	222038	on request	on request
Adjustment device 1 set = 3 pcs.		200178	200178	200179	200179	200179	200179	200179	200179

* When placing an order, please advise voltage
** On request 110 V available
*** Stroke control open / closed on request
**** Attention: Reduced clamping force! Please refer to the clamping force value marked on the roller.

KA

Self-centering Steady Rests
Premium Line

Additional pivoting upper arm for vertical loading

- Compact design, sealed body
- Chip guard with coolant nozzles
- Double guided center arm to carry heavy loads
- Excenter fine adjustment on the outer arms

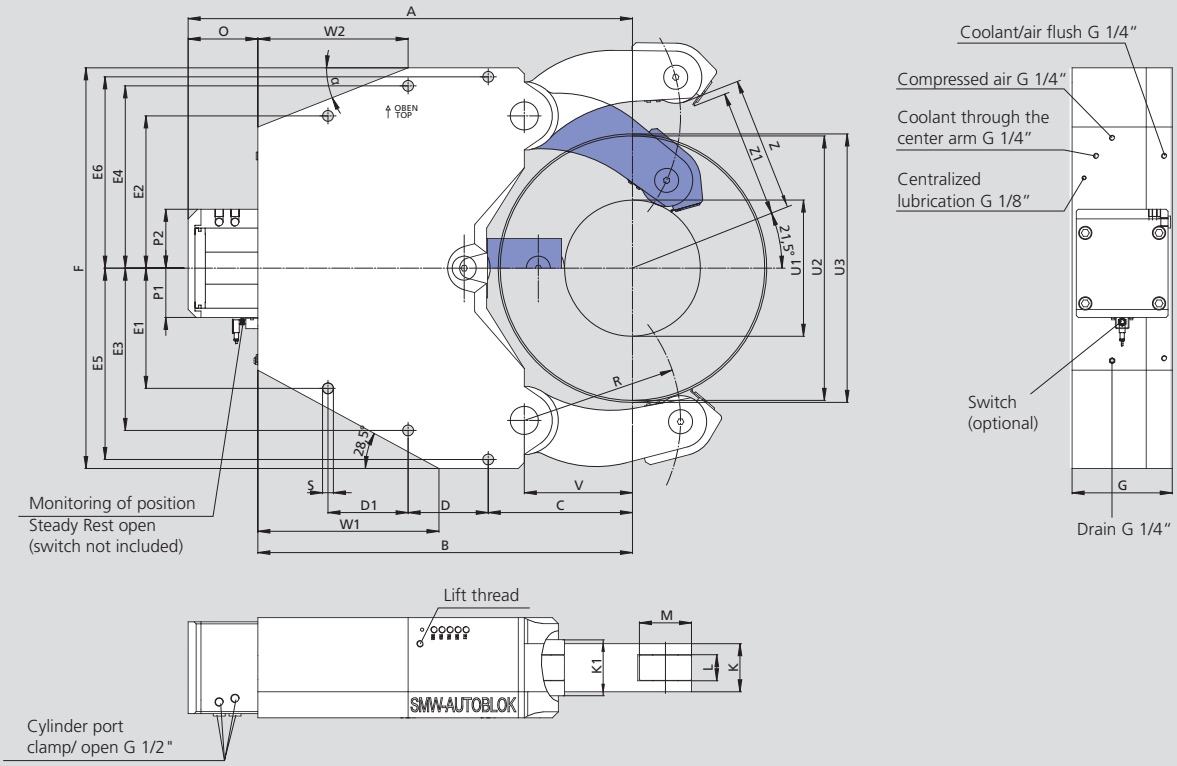

Subject to technical changes.
For more detailed information please ask our customer service.

SMW-AUTOBLOK Type		KA 7	KA 7.1
Centering range with coolant chip guard	**U_1**	**340**	**650**
	U_2	**660**	**910**
Max. axial clearing diameter	**U_3**	**670**	**916**
Vertical loading without chip guard	**Z**	**347.6**	**472**
Vertical loading with chip guard	**Z_1**	**330.7**	**456**
	A	1109	1165
	B	935	1015
	C	360	450
	D	210	220
	D_1	210	220
	E_1	300	240
	E_2	380	320
	E_3	405	365
	E_4	455	415
	E_5	477.5	477.5
	E_6	477.5	477.5
	F	1000	1000
	G	250	250
Width of outer arms	K	120	120
Width of center arm	K_1	140	140
Width of rollers	L	65	65
Diameter of rollers	M	130	130
	O	174	150
	P_1	123	123
	P_2	147	147
	R	390	530
	S	27	27
	V	270	390
	W_1	452	522
	W_2	375	485
	α	21.5°	22°
Piston area	cm²	314	314
Operating pressure max.	bar	80	80
Max. clamping force/roller	daN	8500	8500
Centering accuracy within the whole range	mm	0.08	0.08
Repeatability accuracy	mm	0.03	0.03
Max. roller surface speed	m/min	560	560
Weight approx.	kg	975	896

KA Steady Rest with stroke control Steady Rest open via proximity switch (without proximity switch)***			
Steady Rest size		**KA 7**	**KA 7.1**
KA-M Manual lubrication	Id. No.	222901	222951
KA-Z Central lubrication oil	Id. No.	222900	222950
KA-OLD Central lubrication oil + air	Id. No.	222902	222952
KA-F Central grease lubrication	Id. No.	222903	222953

Type KA

♦ **denotes wearing parts, recommended stock items**

Steady Rest size		KA 7	KA 7.1
Compact lubrication system for oil pressure lubrication Container 2.7 l, 220 V *,**		088707	088707
Compact lubrication system for oil + air lubrication Container 2.7 l, 220 V *,**		088708	088708
Inductive limit switch		087926	087926
Swarf guard coolant/air with wiper		222944	222944
Wiper for swarf guard coolant/air	♦	222994	222994
Roller stripper for middle piece	♦	202358	202358
Rollers cylindrical design	♦	028525	028525
Adjustment device 1 set = 3 pcs.		205696	205696

* When placing an order, please advise voltage
** On request 110 V available
*** Stroke control open / closed on request

KLU/ KLU-A

Self-centering Steady Rests
Premium Line

Narrow arms for crankshafts

- **Sealed body**
- **Chip guard with coolant nozzles**
- **Stroke control unit or proximity switches**

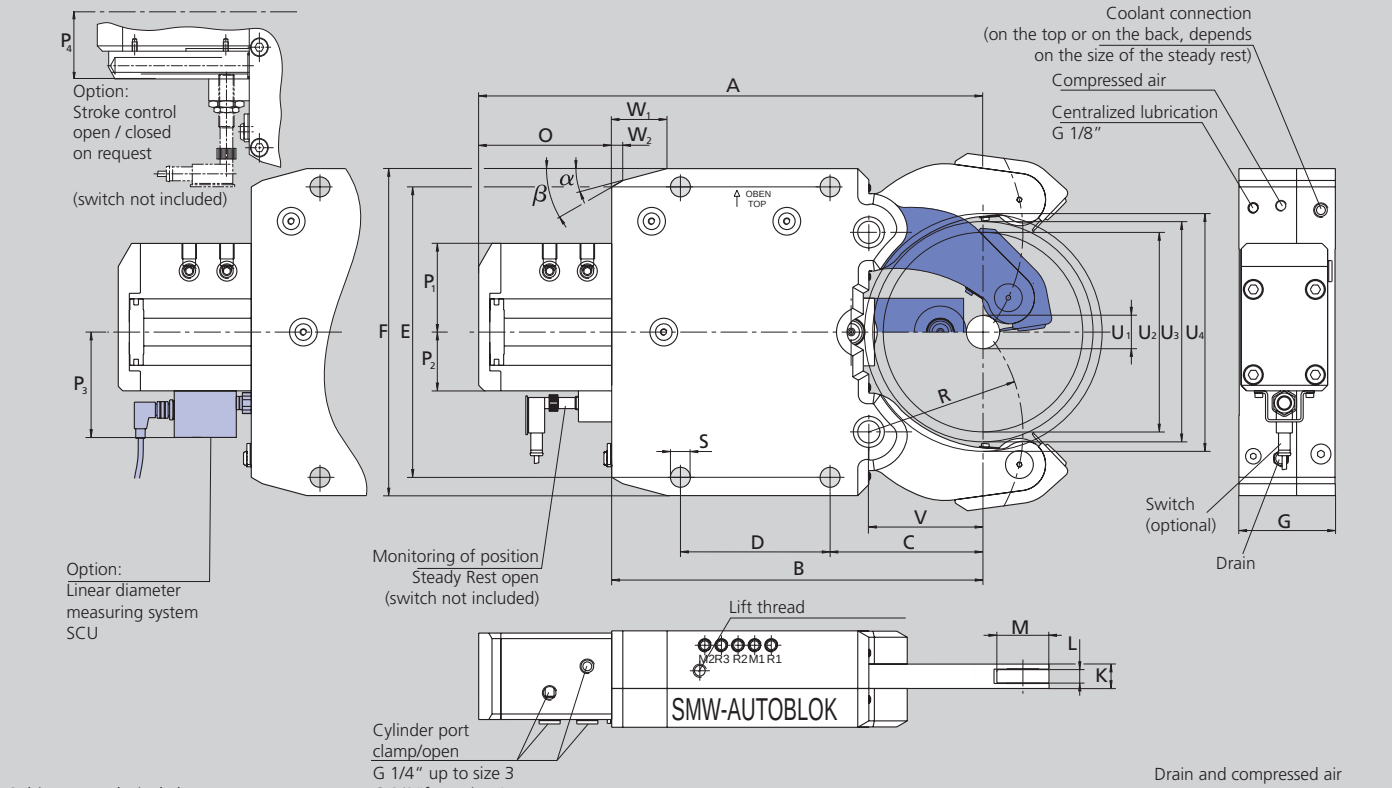

Subject to technical changes.
For more detailed information please ask our customer service.

SMW-AUTOBLOK Type Size		KLU 215	KLU 218	KLU 222	KLU 318	KLU 322	KLU 419	KLU 422	KLU 429	KLU-A 530	KLU-A 540
Centering range with coolant chip guard	**U1**	**20 (12*)**	**20 (12*)**	**20 (12*)**	**30**	**30**	**30**	**30**	**30**	**70**	**70**
	U2	**101 (92*)**	**101**	**101**	**180**	**180**	**245**	**245**	**245**	**293**	**293**
Max. axial clearing diameter	**U3**	**106**	**106**	**106**	**189**	**189**	**253**	**253**	**253**	**330**	**330**
Max. interference diameter	**U4**	**116**	**116**	**116**	**215**	**215**	**282**	**282**	**282**	**370**	**370**
	A	275	275	275	455	455	602	602	602	703	703
	B	195	195	195	335	335	448	448	448	530	530
	C	70	70	70	138	138	146	146	146	198	198
	D	85	85	85	135	135	240	240	240	270	270
	E	170	170	170	262	262	365	365	365	400	400
	F	195	195	195	295	295	405	405	405	440	440
	G	59	62	66	83	87	89	92	99	105	115
	K	15	18	22	18	22	19	22	29	30	40
Width of rollers	L	8	10	13	10	13	10	13	16	16	20
Diameter of rollers	M	35	35	35	47	47	52	52	52	62	62
	O	80	80	80	120	120	154	154	154	173	173
	P1	58	58	58	80	80	80	80	80	88	88
	P2	40	40	40	53	53	53	53	53	59	59
	P3	-	-	-	95	95	95	95	95	101	101
	P4	61	61	61	74	74	74	74	74	80	80
	R	74	74	74	139	139	172	172	172	229	229
	S	14	14	14	18	18	23	23	23	23	23
	V	51	51	51	103	103	124	124	124	176	176
	W1	30	30	30	50	50	58	58	58	62	62
	W2	11.2	11.2	11.2	10	10	18.3	18.3	18.3	19	19
	α	15°	15°	15°	15°	15°	15°	15°	15°	18°	18°
	β	30°	30°	30°	30°	30°	40°	40°	40°	40°	40°
Piston area	cm²	12.5	12.5	12.5	28.3	28.3	28.3	28.3	28.3	50.2	50.2
Operation pressure min./max.	bar	8/50	8/65	8/80	8/60	8/75	8/70	8/80	8/80	8/70	8/80
Max. clamping force/roller	daN	210	270	335	565	700	660	750	750	1170	1340
Centering accuracy within the whole range	mm	0.03	0.03	0.03	0.05	0.05	0.06	0.06	0.06	0.07	0.07
Repeatability accuracy	mm	0.007	0.007	0.007	0.007	0.007	0.01	0.01	0.01	0.01	0.01
Max. roller surface speed	m/min	750	750	750	715	715	700	700	700	700	700
Weight approx.	kg	14	15	16	33	36	70	74	85	100	125

* The Steady Rest can be modified to this clamping range if the coolant chip guard is not used
** Can be loaded axially. Radial loading with chip guard Ø 92, without chip guard Ø 101

KLU/ KLU-A

Self-centering Steady Rests
Premium Line

KLU Steady Rest with stroke control Steady Rest open via proximity switch (without proximity switch)***											
Steady Rest size		**215**	**218**	**222**	**318**	**322**	**419**	**422**	**429**	**530**	**540**
KLU-Z Central lubrication oil	Id. No.	128280	128282	128284	127528	127530	127534	127536	127538	127542	127544
KLU-OLD Central lubrication oil + air	Id. No.	128281	128283	128285	127529	127531	127535	127537	127539	127543	127545
KLU-F Central grease lubrication	Id. No.	on request	on request	on request	on request	on request	on request	on request	on request	on request	on request

KLU Steady Rest with stroke control via linear stroke control SCU, output 4-20 mA											
Steady Rest size		**215**	**218**	**222**	**318**	**322**	**419**	**422**	**429**	**530**	**540**
KLU-Z Central lubrication oil	Id. No.	-	-	-	125637	125655	125365	125398	125421	125988	126050
KLU-OLD Central lubrication oil + air	Id. No.	-	-	-	125638	125656	125366	125399	125422	125989	126051
KLU-F Central grease lubrication	Id. No.	-	-	-	on request	on request	226246	on request	on request	on request	on request

KLU Steady Rest with stroke control via linear stroke control SCU, output 0-10 V											
Steady Rest size		**215**	**218**	**222**	**318**	**322**	**419**	**422**	**429**	**530**	**540**
KLU-Z Central lubrication oil	Id. No.	-	-	-	125640	125657	125369	125400	125423	125992	126052
KLU-OLD Central lubrication oil + air	Id. No.	-	-	-	125641	125658	125370	125401	125424	125993	126053
KLU-F Central grease lubrication	Id. No.	-	-	-	on request	on request	on request	on request	on request	on request	on request

Type KLU

♦ denotes wearing parts, recommended stock items

Steady Rest size		**215**	**218**	**222**	**318**	**322**	**419**	**422**	**429**	**530**	**540**
Compact lubrication system for oil pressure lubrication Container 2.7 l, 220 V *,**		088707	088707	088707	088707	088707	088707	088707	088707	088707	088707
Compact lubrication system for oil + air lubrication Container 2.7 l, 220 V *,**		088708	088708	088708	088708	088708	088708	088708	088708	088708	088708
Inductive limit switch		087926	087926	087926	087926	087926	087926	087926	087926	087926	087926
Swarf guard coolant/air with wiper		128270	128273	128276	125633	125652	125360	125394	125417	127036	126046
Wiper for swarf guard coolant/air ♦		128272	128275	128278	126905	126906	126907	126906	126908	126909	126910
Swarf guard 3-pcs. ♦		125906	126055	126058	-	-	-	-	-	-	-
Roller stripper for middle piece ♦		197995	197996	197997	197998	197999	198000	198001	198002	198003	198004
Roller cylindrical design ♦		122794	020062	020759	017861	002411	017676	084766	019541	125964	019612
Adjustment device 1 set = 3 pcs.		-	-	-	200178	200178	200179	200179	200179	200179	200179

* When placing an order, please advise voltage
** On request 110 V available
*** Stroke control open / closed on request

SMW-AUTOBLOK Extra compact steady rest

Type RX

Double curve system

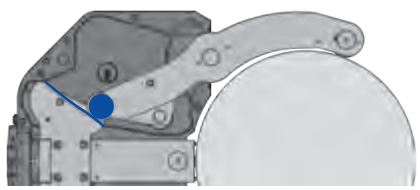

Cam 1 is driving **roller 1**.
They cover the first 50 % of the clamping stroke.

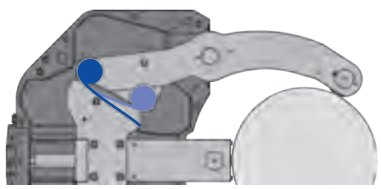

Cam 2 and **roller 2** are taking over in the transission zone between **Cam 1** and **Cam 2**.

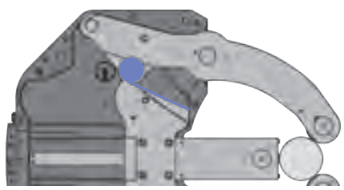

Cam 2 is driving **roller 2**.
They cover the second 50 % of the clamping stroke.

Features included in standard range

Steady Rest Type	Premium Line RX
Steady Rest Size	**5 - 6.1**
Sealed body	■
Safety valve (integrated in pressure booster)	■
Stroke control (proximity switch not included)	■
1 set swarf guard with integrated coolant flush	■
1 set cylindrical rollers	■
Port for compressed air	■
Port for coolant through arms incl. chip guard	■
Toolbox	■

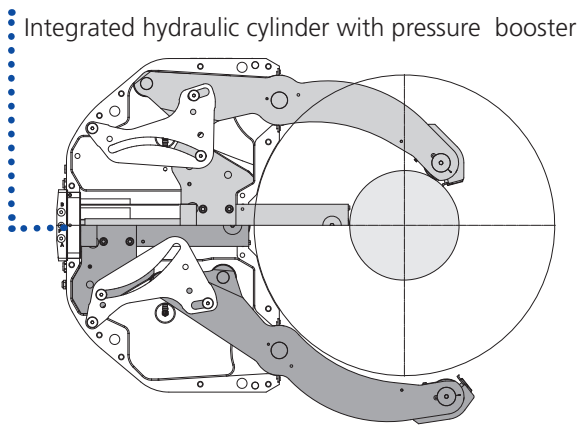

Size comparison

SR 6
Clamping range
125 - 460 mm

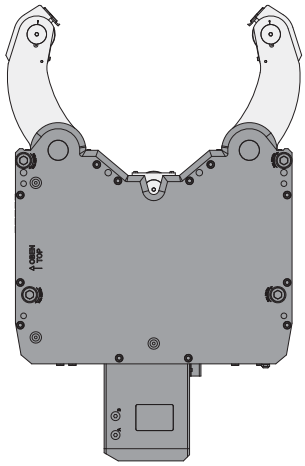

K 6.1
Clamping range
215 - 510 mm

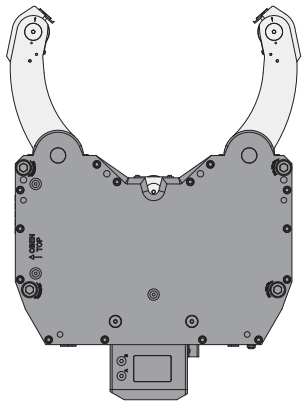

RX 6
Clamping range
100 - 520 mm

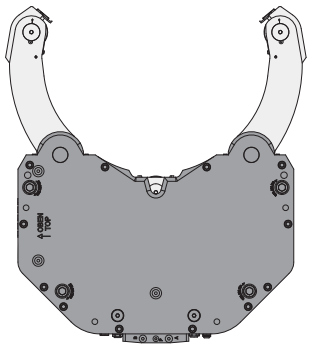

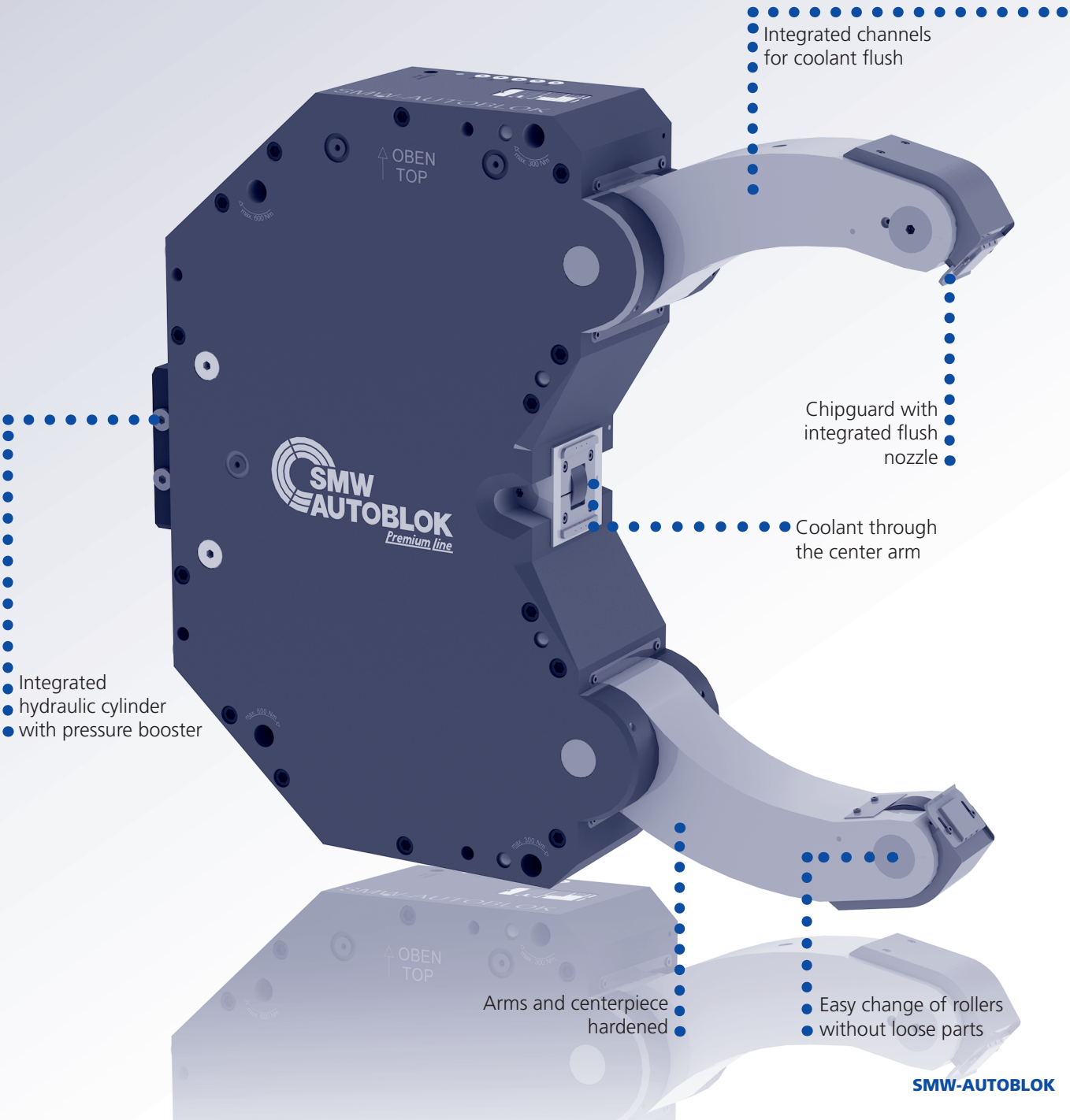

10

RX

Self-centering Steady Rests
Premium Line

Extra compact steady rest

- Integrated cylinder
- Sealed body
- Chip guard with coolant nozzles
- Stroke control with proximity switch

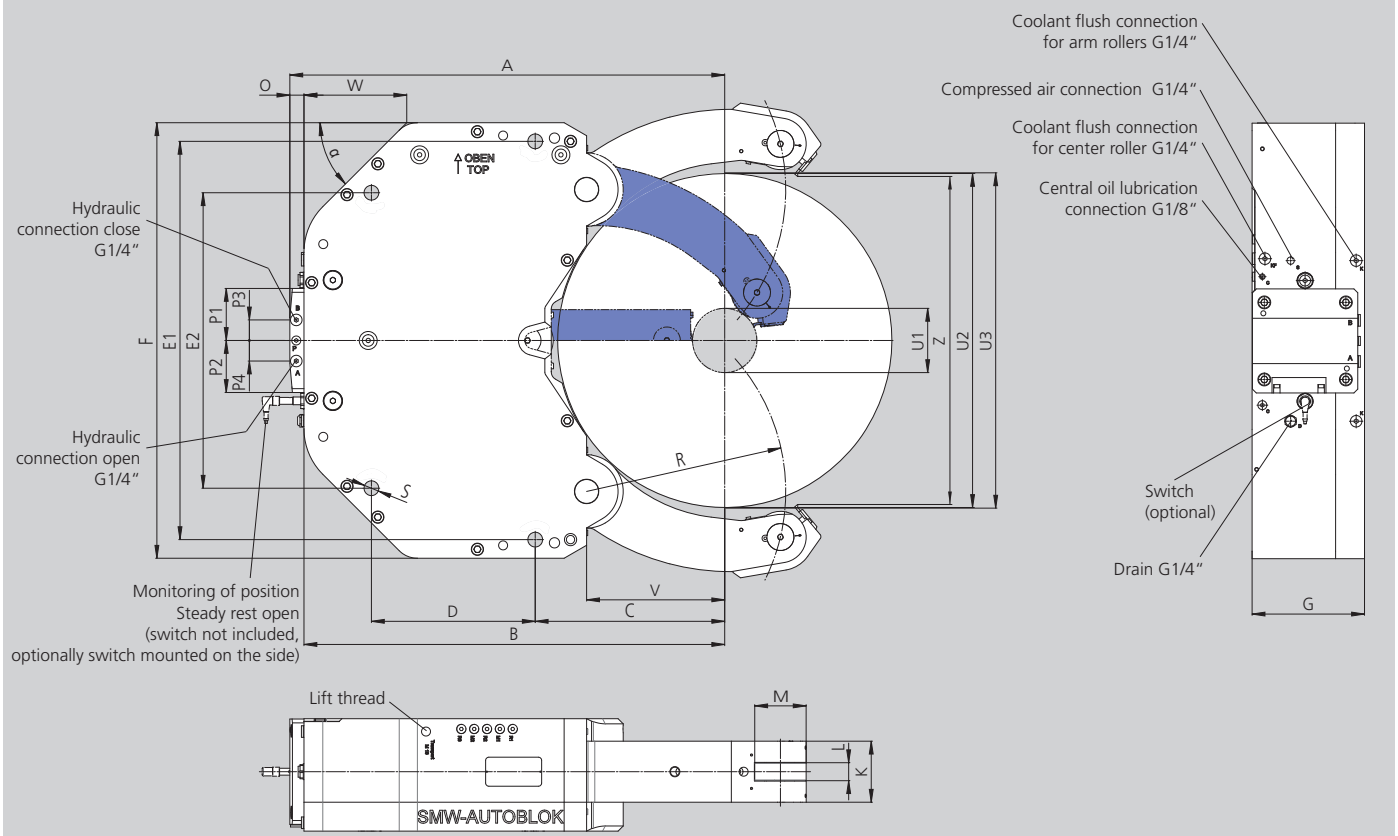

Subject to technical changes.
For more detailed information please ask our customer service.

SMW-AUTOBLOK Type Size		RX 5	RX 6	RX 6.1
Centering range with coolant chip guard	**U1**	**75**	**100**	**250**
Max. clamping diameter*	**U2**	**430**	**520**	**685**
Max. axial clearing diameter	**U3**	**432**	**522**	**687**
	A	599	677	792
	B	577	655	770
	C	225	295	370
	D	235	255	290
	E1	490	620	720
	E2	360	460	520
	F	530	678	760
	G	165	175	175
	K	85	95	95
Width of rollers	L	29	29	29
Diameter of rollers	M	62	80	80
	O	22	22	22
	P1	81	81	81
	P2	81	81	81
	P3	30	30	30
	P4	30	30	30
	R	270	310	395
	S	23	23	23
	V	200	215	285
	W	175	160	197 / 45.6
	Z	432	510.6	682
	α	38°	45°	40° / 60°
Piston area	cm²	12.56	19.63	19.63
Operating pressure min./max.**	bar	20/65	20/60	20/60
Max. clamping force/roller	daN	2000	3000	3000
Centering accuracy over the whole range	mm	0.1	0.1	0.1
Repeatability accuracy	mm	0.01	0.01	0.01
Max. roller surface speed	m/min	600	560	560
Weight approx.	kg	190	295	325

* Radial loading is possible, if only 1 chip guard is used.
** 485 bar / 450 bar in the cylinder created by the pressure booster (ratio 1:7.5). The minimum operating pressure referse to the function „steady rest open".
In case a lower pressure for the function „steady rest close" is needed, to independent pressure regulators for open and close have to be installed.

RX Steady Rest with stroke control Steady Rest open via proximity switch (without proximity switch)				
Steady Rest size		**5**	**6**	**6.1**
RX-M Manual lubrication	Id. No.	on request	on request	on request
RX-Z Central lubrication oil	Id. No.	224200	224140	224220
RX-OLD Central lubrication oil + air	Id. No.	on request	on request	on request
RX-F Central grease lubrication	Id. No.	on request	on request	on request

RX Steady Rest with stroke control via linear stroke control SCU-A, output 4-20 mA				
Steady Rest size		**5**	**6**	**6.1**
RX-M Manual lubrication	Id. No.	on request	on request	on request
RX-Z Central lubrication oil	Id. No.	on request	on request	on request
RX-OLD Central lubrication oil + air	Id. No.	on request	on request	on request
RX-F Central grease lubrication	Id. No.	on request	on request	on request

RX Steady Rest with stroke control via linear stroke control SCU-A, output 0-10V				
Steady Rest size		**5**	**6**	**6.1**
RX-M Manual lubrication	Id. No.	on request	on request	on request
RX-Z Central lubrication oil	Id. No.	225925	on request	on request
RX-OLD Central lubrication oil + air	Id. No.	on request	on request	on request
RX-F Central grease lubrication	Id. No.	on request	on request	on request

Type RX

♦ denotes wearing parts, recommended stock items

Steady Rest size			**5**	**6**	**6.1**
Compact lubrication system for oil pressure lubrication Container 2.7 l, 220 V *,**			088707	088707	088707
Compact lubrication system for oil + air lubrication Container 2.7 l, 220 V *,**			088708	088708	088708
Eccenter fine adjustment compl. at lever arm (2 pcs. per Steady Rest) manual/central lubrication			224193	224196	224196
Inductive limit switch			087926	087926	087926
Swarf guard coolant/air with wiper			125816	125837	125837
Wiper for swarf guard coolant/air		♦	126888	126694	126694
Roller stripper for middle piece		♦	200152	203268	203268
Roller cylindrical design		♦	018345	026594	026594
Roller spherical design		♦	019545	121302	121302
Roller synthetic material ***		♦	023650	on request	on request
Roller stripper (2-pieces) for middle piece with roller synthetic material		♦	204216	-	-
Roller carbide		♦	222038	on request	on request
Adjustment device 1 set = 3 pcs.			200179	200179	200179

* When placing an order, please advise voltage
** On request 110 V available
*** Attention: Reduced clamping force! Please refer to the clamping force value marked on the roller.

SCU

Linear stroke control unit for steady rests

- Completely sealed, protection class IP 66
- Output signal 4-20 mA or 0-10 V

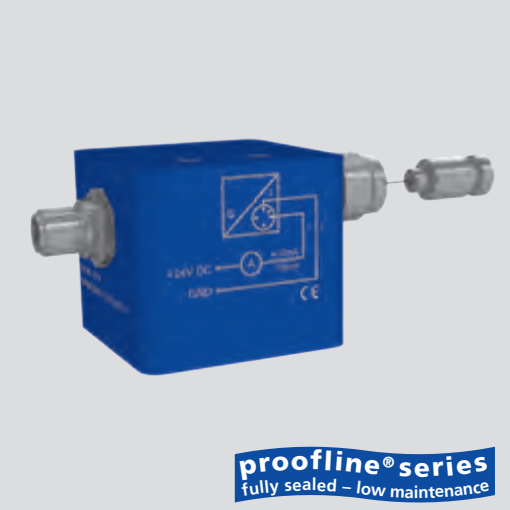

Application/customer benefits

- For SMW-AUTOBLOK steady rests
- Linear monitoring of the complete clamping stroke avoids collision with the tools, which is an added safety feature
- Time saving by only partial opening of the steady rest (with corresponding hydraulic power unit)

Technical features

- Portection class IP 66
- Output signal 4-20 mA or 0-10 V
- Electrical power supply 24 VDC
- **proofline®** = fully sealed – low maintenance

Accessories

Sensor connection cable see LPS-X
(Plug M12 x 1 5-pin) see general catalog page 275

Installation and Position

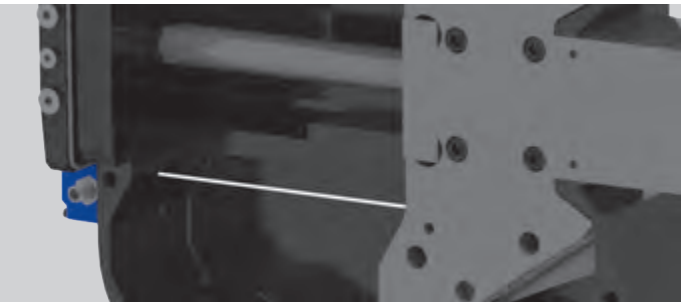

Technical data for steady rests type RX
SCU, output 4-20 mA: Id. No. 224244
SCU, output 0-10 V: Id. No. 225924

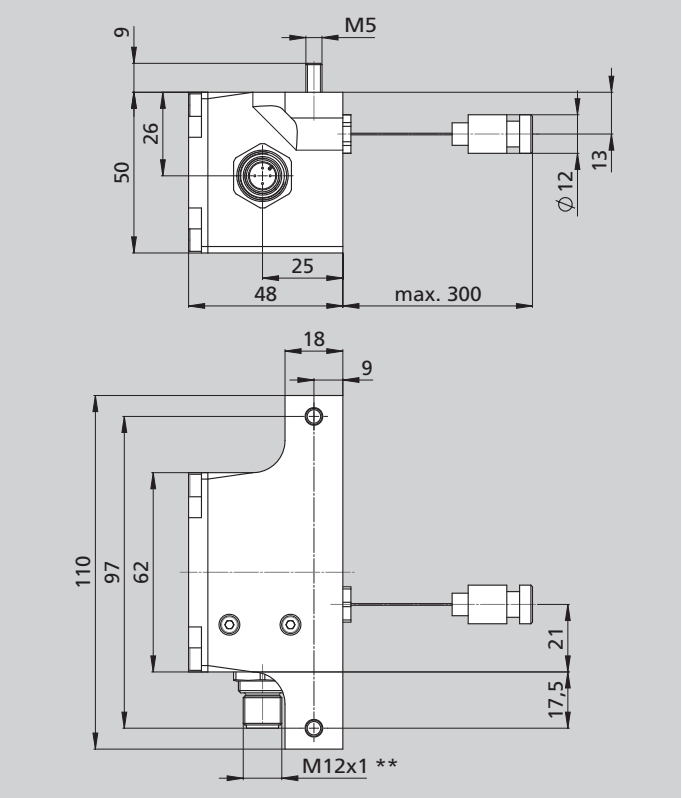

Technical data for other steady rests types
SCU, output 4-20 mA: Id. No. 225440
SCU, output 0-10 V: Id. No. 226122

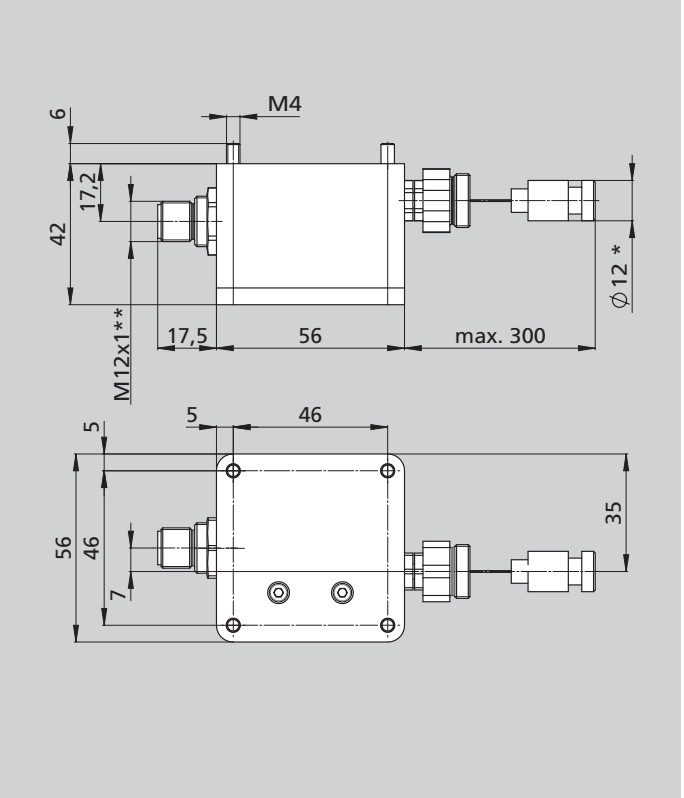

Note for both SCU types: It is about a two-wire system. The measuring current is simultaneously acting to feed the transformer.
Subject to technical changes. For more detailed information please ask our customer service.
* For mounting steady rests type KLU: Ø 8 mm
** Connector 4-pin

Linear stroke control unit for steady rests

SCU

- Completely sealed, protection class IP 66
- Output signal 4-20 mA or 0-10 V

Linear stroke control unit SCU

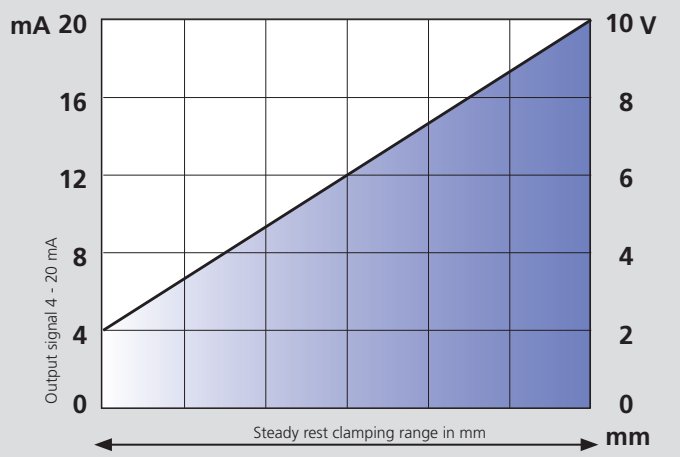

The linear stroke control unit Type SCU provides a linear output signal between min. 4 mA and max. 20 mA depending on the steady rest clamping range.
This allows to detact any position of the steady rest, and thus of the steady rest arms, safely.

- Time saving by only partial opening of the steady rest (with corresponding hydraulic power unit)
- Collision protection by evaluation of the output signal of the machine control.

Output signal depending on the steady rest clamping range

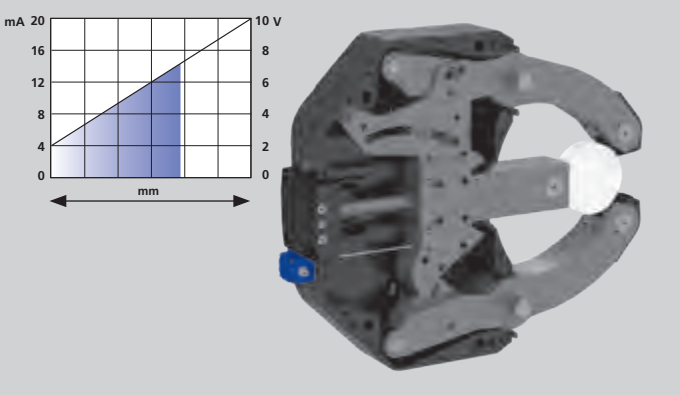

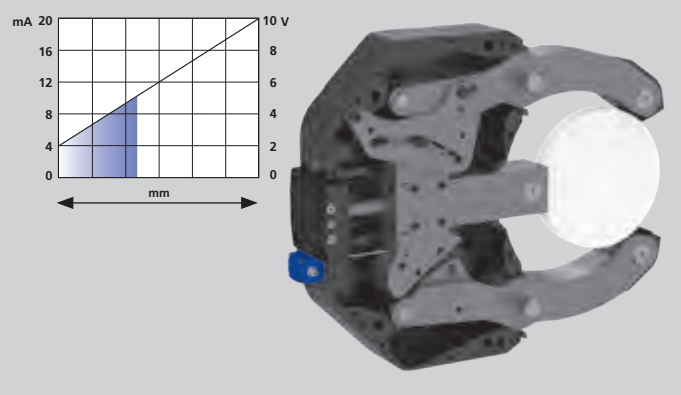

Time saving by only partial opening of the steady rest

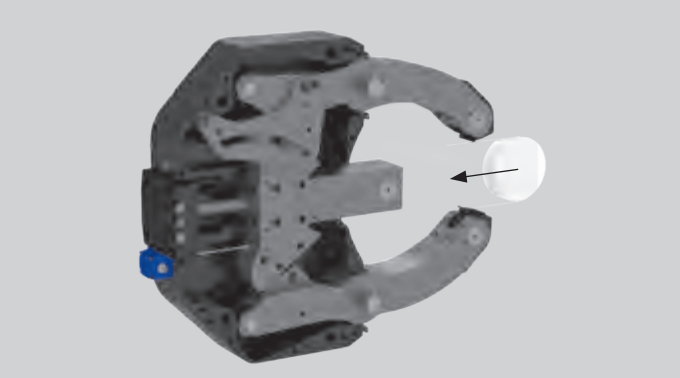

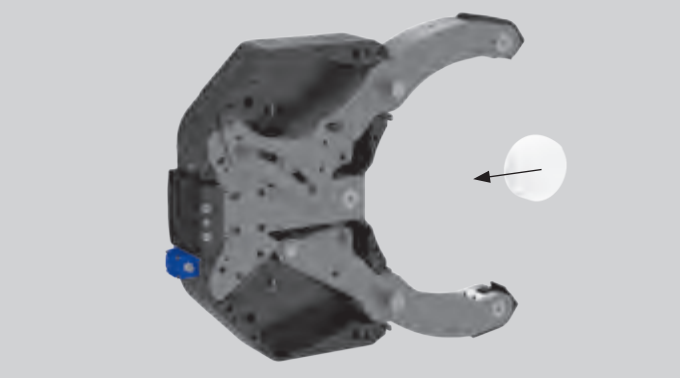

Collision protection by evaluation of the output signal

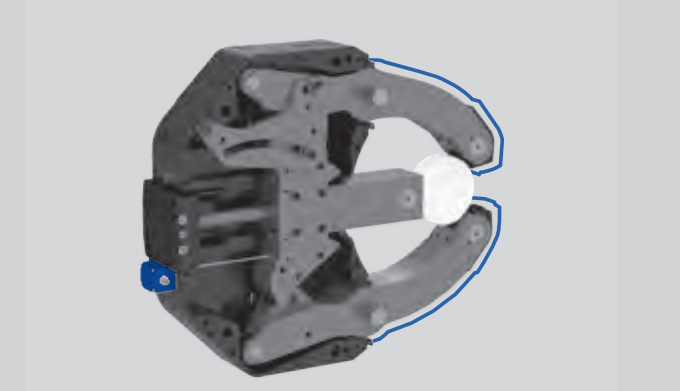

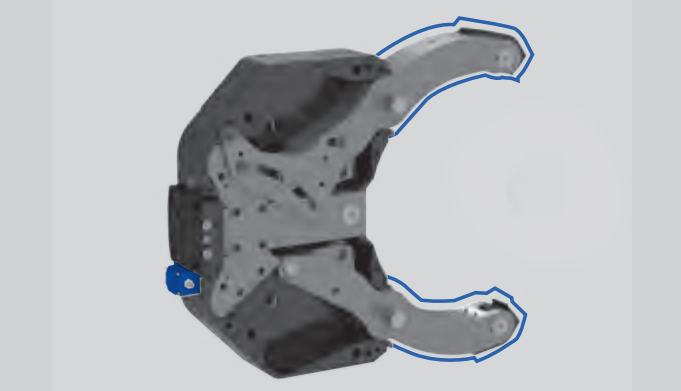

SRG/ SRG-B

Grinding Steady Rests

Grinding Steady Rests

■ Fine adjustment of the center
■ Retractable Steady Rest arms

Application / customer benefits

- Support of shaft type workpieces on grinding machines
- Particularly suitable for the machining of crankshafts and camshafts
- Rapid set up of the steady rest to the grinding center with the sensitive fine adjustment of the grinding center
- Suitable for follow down grinding
- Retractable steady rest arms for autoloading
- Monitoring of end positions for process safety

Standard equipment

Basic Grinding Steady Rest SRG

(Padholder for the middle piece, clamping kit and pad kits are not scope of delivery. For these parts please see the overview for the configurations below)

Technical details

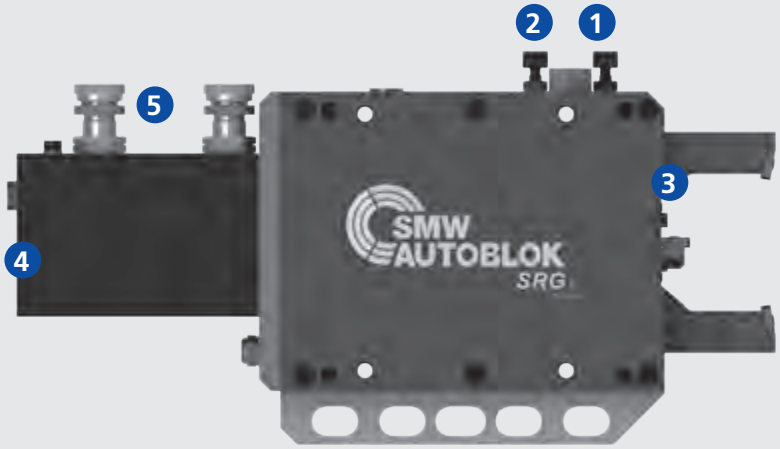

1. Horizontal fine adjustment of the grinding center
2. Vertical fine adjustment of the grinding center
3. Retractable Steady Rest arms
4. Port for compressed air against dust and coolant
5. Monitoring of end positions with proximity switches (switches not included)

Overview Configuration

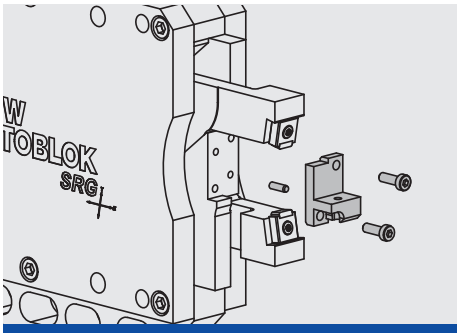

Select padholder for the middle piece* (SRG 1, 1S, 2)

- Consisting of padholder middle piece (incl. mounting material)
- 3 versions available: 0 degree, ± 5 degree, ± 7 degree
- Can be rotated by 180 degrees

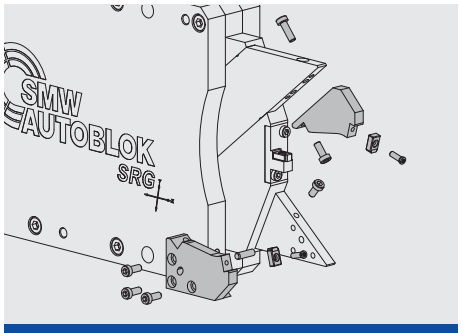

Select clamping kit (SRG 2F, 3F, 4F, 5F, 5.1FS | SRG-B 4F, 5F)**

- Consisting of 2 nests for the arms and 1 padholder for the middle piece (incl. mounting material)
- The different clamping ranges can be covered with different clamping kits

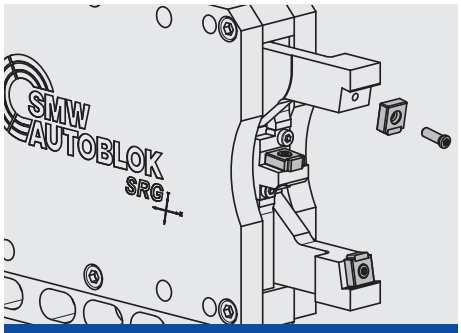

Select Pad kit***

- Consisting of 3 pads incl. 3 mounting screws
- Standard for clamping range as shown on the Steady Rest
- Special pad kit for shifting of the clamping range -5 mm available.

* Consisting of padholder for the middle piece incl. mounting material
** Consisting of padholder for the middle piece and the nests for the arms incl. mounting material
*** Consisting of 3 pads and 3 mounting bolts

Overview clamping range

Type	Clamping range in mm	Page
SRG 0.8	3 - 18	357
SRG 1	20 - 35	358
SRG 1 S	20 - 35	359
SRG 2	30 - 60	360
SRG 2 F		361
I Kit	12 - 28	
II Kit	28 - 44	
III Kit	44 - 60	
SRG 3 F		362
I Kit	10 - 30	
II Kit	30 - 50	
III Kit	50 - 70	
IV Kit	70 - 90	
SRG 4 F SRG-B 4 F		363-364
I Kit	22 - 35	
II Kit	35 - 48	
III Kit	48 - 61	
IV Kit	61 - 74	
V Kit	74 - 87	
VI Kit	87 - 100	
SRG 5 F SRG-B 5 F		365-366
I Kit	48 - 70	
II Kit	70 - 92	
III Kit	92 - 114	
IV Kit	114 - 136	
SRG 5.1 FS		367
I Kit	96 - 102	
II Kit	102 - 108	
III Kit	108 - 114	
IV Kit	114 - 120	
V Kit	120 - 126	

0 10 20 30 40 50 60 70 80 90 100 110 120 130 140

SRG/ SRG-B

Grinding Steady Rests

Ordering review

SMW-AUTOBLOK Type Basic Steady Rest		SRG 0.8 223250	SRG 1 221175	SRG 1 S 223060	SRG 2 221871
Clamping range	mm	**3-18**	**20-35**	**20-35**	**30-60**
Padholder 0 degree*	Id. No.	-	203977	205191	203985
Padholder ± 5 degree*	Id. No.	-	203978	205196	203986
Padholder ± 7 degree*	Id. No.	-	203979	205197	203987
Pad Kit Standard	Id. No.	205439	203976	204161	203976
Pad Kit Special ***	Id. No.	-	203939	-	203939
Working pressure	bar	20-50	15-30	20-50	15-30
Follow down grinding		Yes	Yes	Yes	Yes

SMW-AUTOBLOK Type Basic Steady Rest		SRG 2 F 222260			SRG 3 F 224450				SRG 4 F 221930			SRG-B 4 F 223140		
Clamping range	mm	**12-60******			**10-90******				**22-100**					
Clamping kit		**I**	**II**	**III**	**I**	**II**	**III**	**IV**	**I**	**II**	**III**	**IV**	**V**	**VI**
Clamping range	mm	**12-28**	**28-44**	**44-60**	**10-30**	**30-50**	**50-70**	**70-90**	**22-35**	**35-48**	**48-61**	**61-74**	**74-87**	**87-100**
Clamping kit 0 degree**	Id. No.	204383	204382	204381	224298	224297	224296	224295	205000	205001	205002	205003	205004	205005
Clamping kit +2 degree**	Id. No.	-	-	-	-	-	-	-	205006	205007	205008	205009	205010	205011
Clamping kit +3 degree**	Id. No.	-	-	-	-	-	-	-	-	-	-	-	-	-
Clamping kit +5 degree**	Id. No.	206349	206348	206347	224302	224301	224300	224299	224453	224454	224455	224456	224457	224458
Clamping kit +7 degree**	Id. No.	206346	206345	206344	224306	224305	224304	224303	224459	224460	224461	224462	224463	224464
Pad Kit Standard	Id. No.	203976			203976				204161					
Pad Kit Special***	Id. No.	203939			203939				-					
Working pressure	bar	15-30			10-30				7-25					
Follow down grinding		Yes			Yes				Yes					

SMW-AUTOBLOK Type Basic Steady Rest		SRG 5 F 223774		SRG-B 5 F 222530		SRG 5.1 FS 222665				
Clamping range	mm	**48-136**				**96-126**				
Clamping kit		**I**	**II**	**III**	**IV**	**I**	**II**	**III**	**IV**	**V**
Clamping range	mm	**48-70**	**70-92**	**92-114**	**114-136**	**96-102**	**102-108**	**108-114**	**114-120**	**120-126**
Clamping kit 0 degree**	Id. No.	-	-	-	-	-	-	-	-	-
Clamping kit +2 degree**	Id. No.	205018	205019	205020	205021	-	-	-	-	-
Clamping kit +3 degree**	Id. No.	-	-	-	-	205200	205201	205202	205203	205204
Clamping kit +5 degree**	Id. No.					-	-	-	-	-
Clamping kit +7 degree**	Id. No.					-	-	-	-	-
Pad Kit Standard	Id. No.	204161				204161				
Pad Kit Special***	Id. No.	-				-				
Working pressure	bar	10-30				7-25				
Follow down grinding		Yes				Yes				

* Consisting of padholder for the middle piece incl. mounting material
** Consisting of padholder for the middle piece and the nests for the arms incl. mounting material
*** Clamping range -5 mm
**** Padholder middle piece for contact angle
SRG-B Side mounted cylinder

Pad position middle piece / contact angle

Pad position = 0 degree

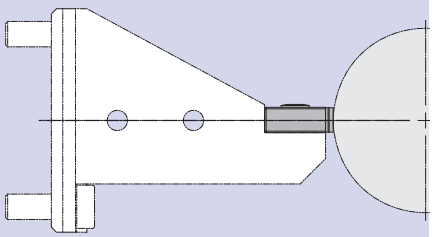

Pad position = (-) degree

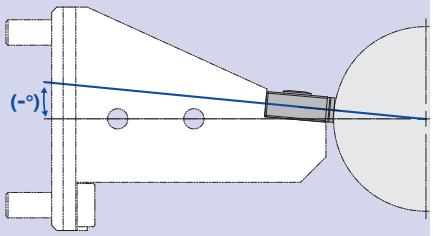

Pad position = (+) degree

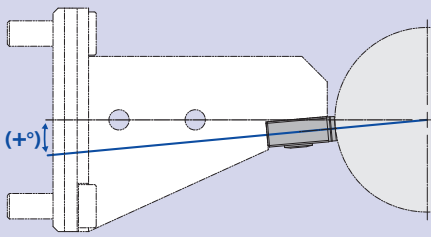

SRG 0.8

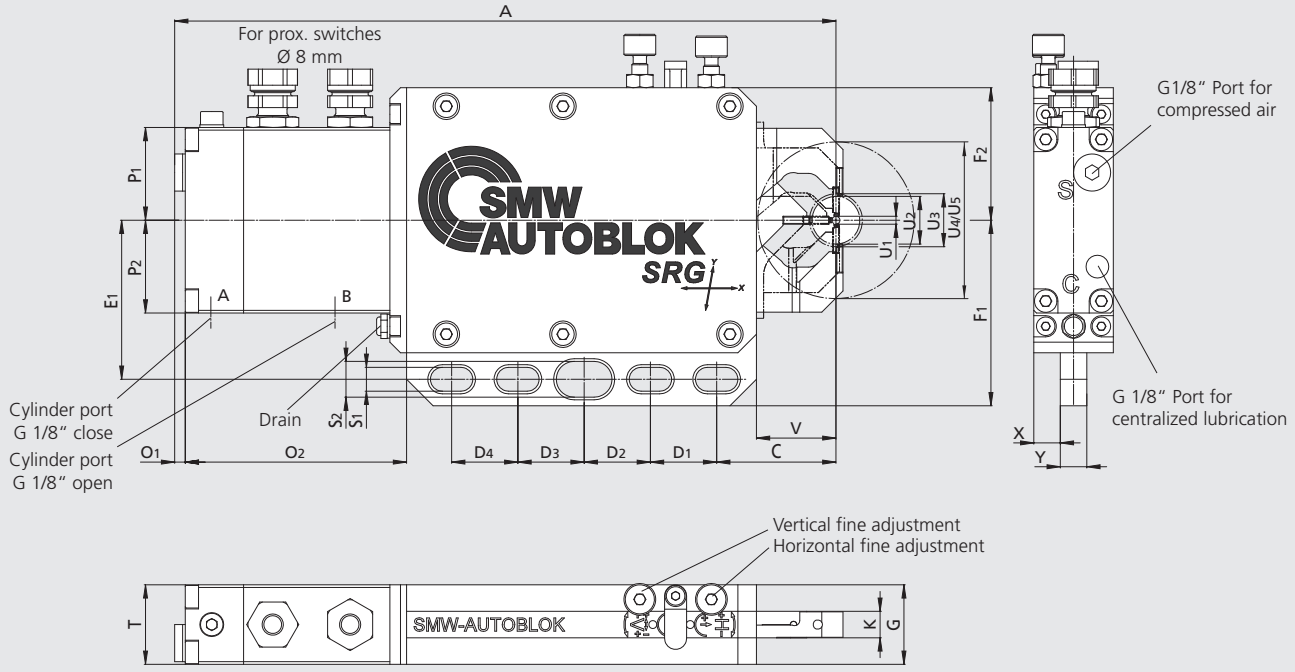

Subject to technical changes.
For more detailed information please ask our customer service.

SMW-AUTOBLOK Type Id. No.			SRG 0.8 223250
Minimum clamping diameter	**U1**	mm	**3**
Maximum clamping diameter	**U2**	mm	**18**
Max. loading diameter (vertical, steady open)	**U3**	mm	**58**
Max. axial clearance diameter (steady open)	**U4**	mm	**58**
Max. swing diameter	**U5**	mm	**58**
Horizontal adjustment range		mm	**± 0.05**
Vertical adjustment range		mm	**± 0.05**
	A	mm	249.5
	C	mm	45
	D1	mm	25
	D2	mm	25
	D3	mm	25
	D4	mm	25
	E1	mm	60
	F1	mm	70
	F2	mm	50
	G	mm	30
	K	mm	10
	O1	mm	4
	O2	mm	83.5
	P1	mm	35
	P2	mm	35
	S1	mm	9 (4x)
	S2	mm	13.46 (1x)
	T	mm	30
	V	mm	30
	X	mm	10
	Y	mm	10
Cylinder stroke		mm	43
Piston area		cm²	3.14
Operating pressure max.		bar	50
Working pressure		bar	20-50
Repeatability accuracy		mm	±0.001
Mass		kg	4.3

SRG 1

Grinding Steady Rests

Dimensions and technical data

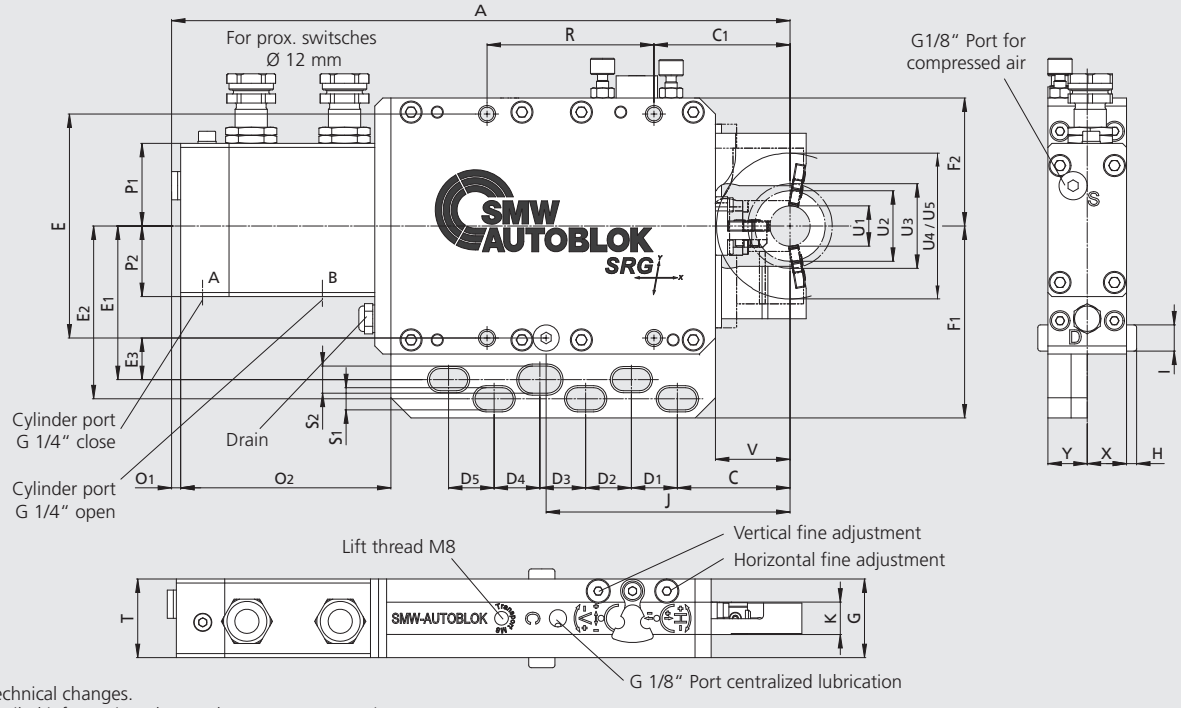

Subject to technical changes.
For more detailed information please ask our customer service.

SMW-AUTOBLOK Type Id. No.			SRG 1 221175
Minimum clamping diameter	**U1**	mm	**20**
Maximum clamping diameter	**U2**	mm	**35**
Max. loading diameter (vertical, steady open)	**U3**	mm	**72**
Max. axial clearance diameter (steady open)	**U4**	mm	**72**
Max. swing diameter	**U5**	mm	**72**
Horizontal adjustment range		mm	**± 0.20**
Vertical adjustment range		mm	**± 0.10**
	A	mm	306.8
	C	mm	55.9
	C1	mm	67.5
	D1	mm	22.8
	D2	mm	22.7
	D3	mm	22.7
	D4	mm	22.7
	D5	mm	22.6
	E	mm	111.1
	E1	mm	76.2
	E2	mm	85.7
	E3	mm	20.65
	F1	mm	95.2
	F2	mm	63.5
	G	mm	39
	H	mm	5
	I	mm	13
	J	mm	121
	K	mm	16.1
	O1	mm	4.5
	O2	mm	104.3
	P1	mm	41
	P2	mm	35
	R	mm	82.8
	S1	mm	11 (5x)
	S2	mm	13.46 (1x)
	T	mm	39
	V	mm	37
	X	mm	19.5
	Y	mm	19.5
Cylinder stroke		mm	73.4
Piston area		cm²	7.07
Operating pressure max.		bar	45
Working pressure		bar	15-30
Repeatability accuracy		mm	±0.001
Mass		kg	8.5

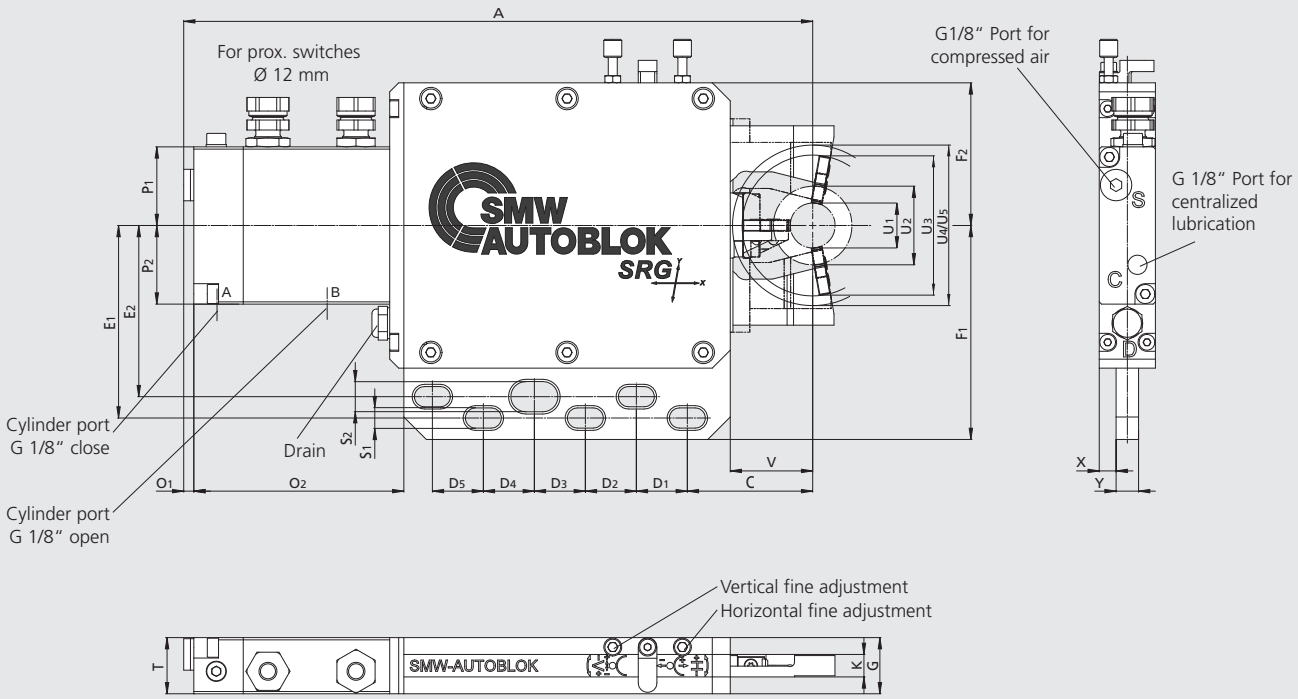

Subject to technical changes.
For more detailed information please ask our customer service.

SMW-AUTOBLOK Type Id. No.			SRG 1 S 223060
Minimum clamping diameter	**U1**	mm	**20**
Maximum clamping diameter	**U2**	mm	**35**
Max. loading diameter (vertical, steady open)	**U3**	mm	**62**
Max. axial clearance diameter (steady open)	**U4**	mm	**72**
Max. swing diameter	**U5**	mm	**72**
Horizontal adjustment range		mm	**± 0.20**
Vertical adjustment range		mm	**± 0.10**
	A	mm	280
	C	mm	55.8
	D1	mm	22.7
	D2	mm	22.7
	D3	mm	22.7
	D4	mm	22.7
	D5	mm	22.7
	E1	mm	85.7
	E2	mm	76.2
	F1	mm	95.25
	F2	mm	63.5
	G	mm	25
	K	mm	10
	O1	mm	4.5
	O2	mm	93.5
	P1	mm	35
	P2	mm	35
	S1	mm	9 (5x)
	S2	mm	13.46 (1x)
	T	mm	25
	V	mm	36.7
	X	mm	7.5
	Y	mm	10
Cylinder stroke		mm	53
Piston area		cm²	2.01
Operating pressure max.		bar	50
Working pressure		bar	20-50
Repeatability accuracy		mm	±0.001
Mass		kg	4.8

SRG 2

Grinding Steady Rests

Dimensions and technical data

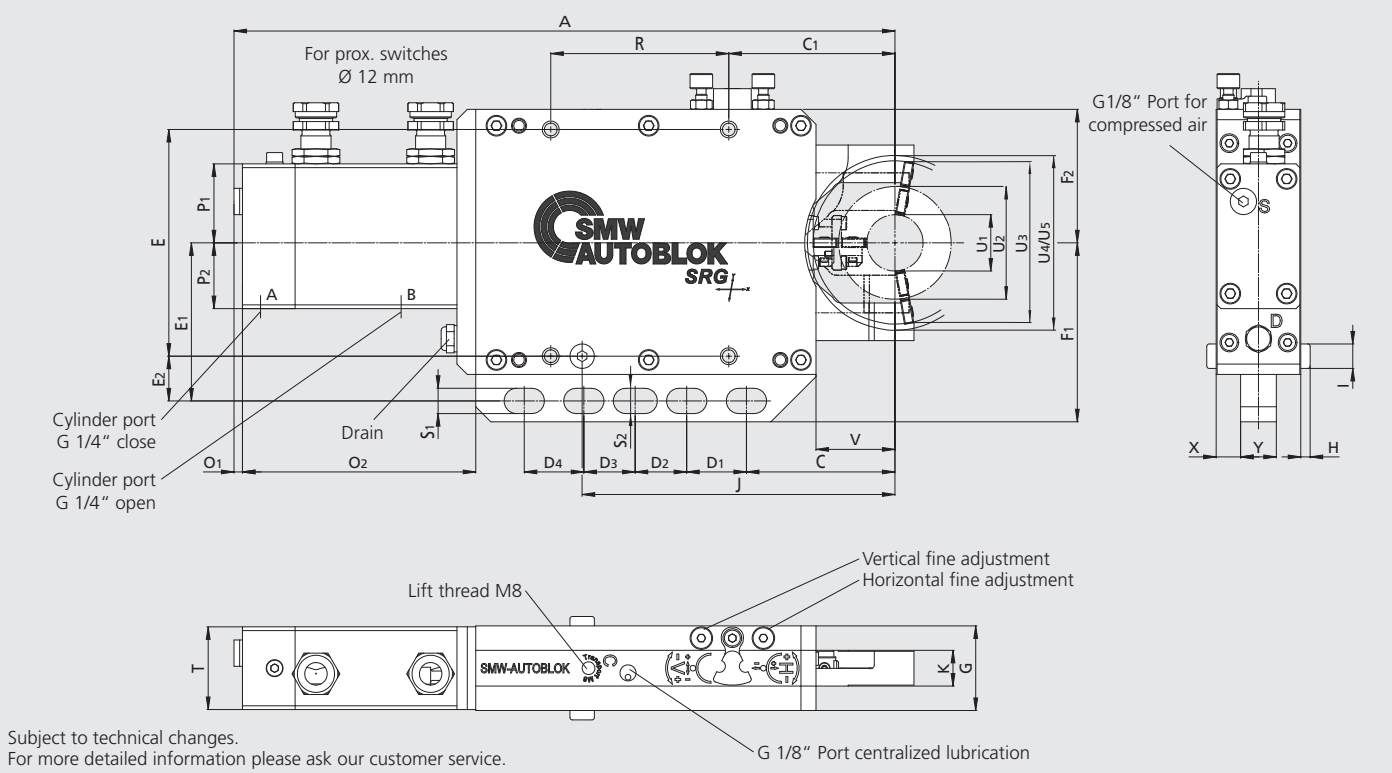

Subject to technical changes.
For more detailed information please ask our customer service.

SMW-AUTOBLOK Type Id. No.			SRG 2 221871
Minimum clamping diameter	**U1**	mm	**30**
Maximum clamping diameter	**U2**	mm	**60**
Max. loading diameter (vertical, steady open)	**U3**	mm	**82**
Max. axial clearance diameter (steady open)	**U4**	mm	**95**
Max. swing diameter	**U5**	mm	**95**
Horizontal adjustment range		mm	**± 0.20**
Vertical adjustment range		mm	**± 0.14**
	A	mm	351.6
	C	mm	79
	C1	mm	88.4
	D1	mm	31.8
	D2	mm	27.4
	D3	mm	27.3
	D4	mm	31.7
	E	mm	120.6
	E1	mm	84.1
	E2	mm	23.8
	F1		95.2
	F2	mm	71
	G	mm	45
	H	mm	5
	I	mm	13
	J	mm	166.4
	K	mm	19
	O1	mm	4.5
	O2	mm	124.1
	P1	mm	42
	P2	mm	35
	R	mm	94.7
	S1	mm	12.5 (4x)
	S2	mm	13.46 (1x)
	T	mm	44
	V	mm	42
	X	mm	13
	Y	mm	19
Cylinder stroke		mm	73.4
Piston area		cm²	7.07
Operating pressure max.		bar	45
Working pressure		bar	15-30
Repeatability accuracy		mm	±0.001
Mass		kg	11.8

SRG 2 F

Grinding Steady Rests

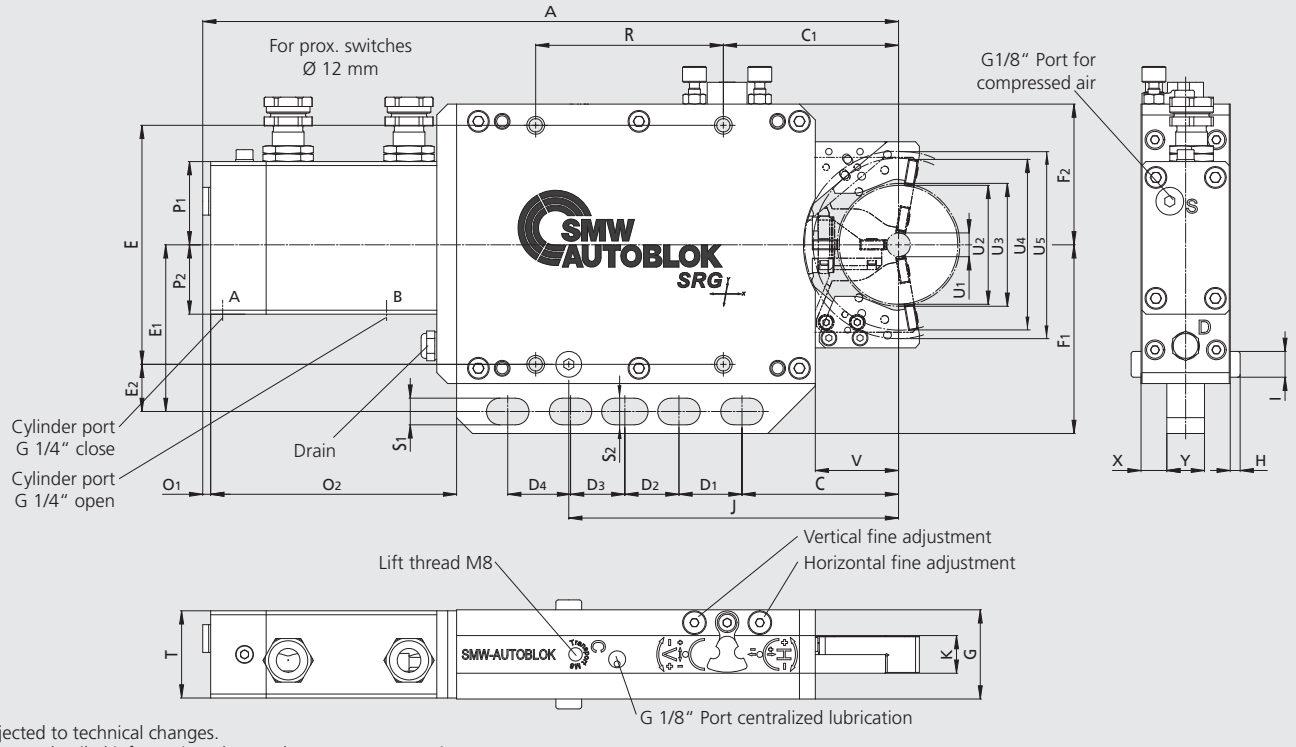

Subjected to technical changes.
For more detailed information please ask our customer service.

SMW-AUTOBLOK Type Id. No.			SRG 2 F 222260		
Clamping kit			**I**	**II**	**III**
Minimum clamping diameter	**U1**	mm	**12**	**28**	**44**
Maximum clamping diameter	**U2**	mm	**28**	**44**	**60**
Max. loading diameter (vertical, steady open)	**U3**	mm	**82**	**82**	**82**
Max. axial clearance diameter (steady open)	**U4**	mm	**94**	**94**	**94**
Max. swing diameter	**U5**	mm		**94**	
Horizontal adjustment range		mm		**± 0.20**	
Vertical adjustment range		mm		**± 0.14**	
	A	mm		351.1	
	C	mm		79	
	C1	mm		88.4	
	D1	mm		31.8	
	D2	mm		27.3	
	D3	mm		27.4	
	D4	mm		31.7	
	E	mm		120.6	
	E1	mm		84.1	
	E2	mm		23.8	
	F1	mm		95.2	
	F2	mm		71	
	G	mm		45	
	H	mm		5	
	I	mm		13	
	J	mm		166.4	
	K	mm		19	
	O1	mm		4.5	
	O2	mm		124.1	
	P1	mm		42	
	P2	mm		35	
	R	mm		94.7	
	S1	mm		12.5 (4x)	
	S2	mm		13.46 (1x)	
	T	mm		44	
	V	mm		42	
	X	mm		13	
	Y	mm		19	
Cylinder stroke		mm		66.4	
Piston area		cm²		7.07	
Operating pressure max.		bar		45	
Working pressure		bar		15-30	
Repeatability accuracy		mm		±0.001	
Mass		kg		11.2	

SRG 3 F

Grinding Steady Rests

Dimensions and technical data

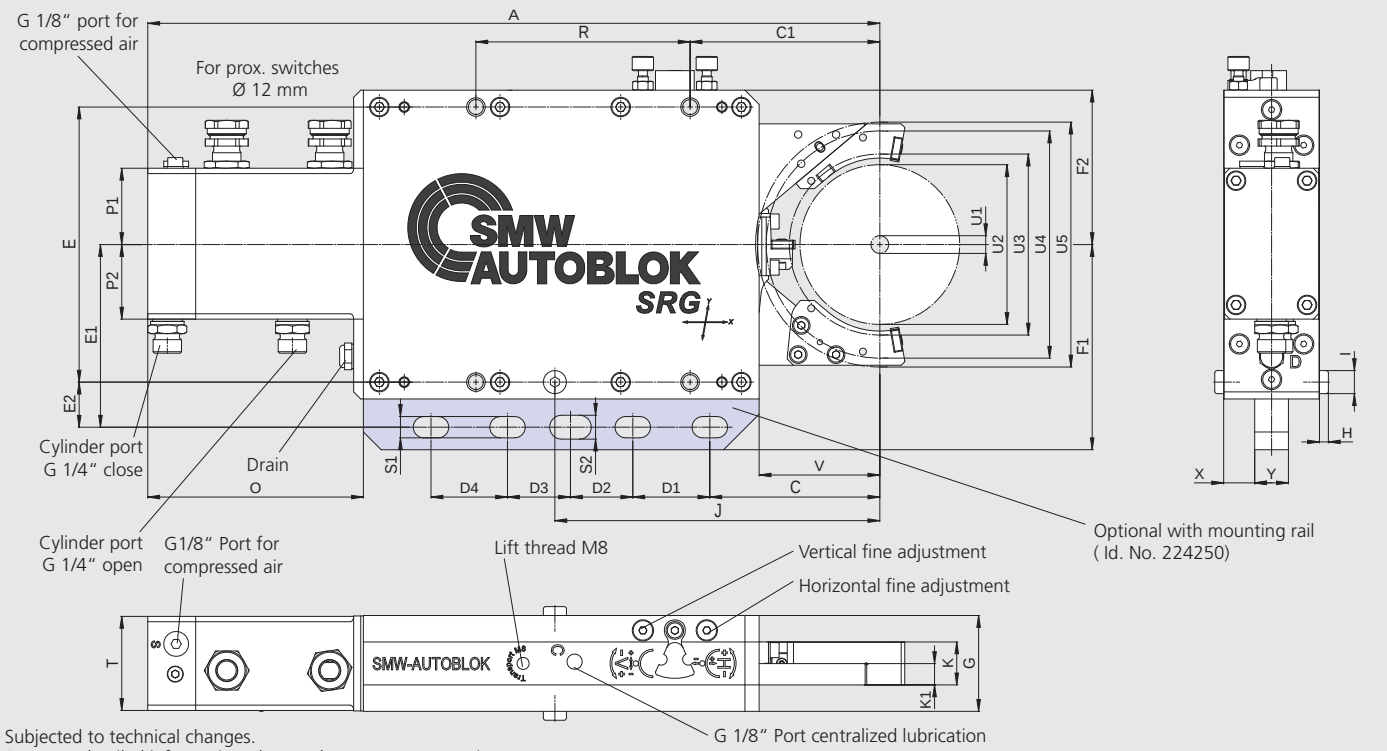

Subjected to technical changes.
For more detailed information please ask our customer service.

SMW-AUTOBLOK Type Id. No.			SRG 3 F 224450			
Clamping kit			**I**	**II**	**III**	**IV**
Minimum clamping diameter	**U1**	mm	**10**	**30**	**50**	**70**
Maximum clamping diameter	**U2**	mm	**30**	**50**	**70**	**90**
Max. loading diameter (vertical, steady open)	**U3**	mm	**111**	**110**	**106**	**102**
Max. axial clearance diameter (steady open)	**U4**	mm	**125**	**129**	**135**	**138**
Max. swing diameter	**U5**	mm	**138**			
Horizontal adjustment range		mm	**± 0.20**			
Vertical adjustment range		mm	**± 0.15**			
	A	mm	412.5			
	C	mm	95.8			
	C1	mm	106.9			
	D1	mm	43.4			
	D2	mm	35.1			
	D3	mm	35.5			
	D4	mm	43.1			
	E	mm	155			
	E1	mm	102.9			
	E2	mm	25.4			
	F1	mm	115.6			
	F2	mm	87			
	G	mm	54			
	H	mm	5			
	I	mm	13			
	J	mm	183.1			
	K	mm	24			
	K1	mm	12			
	O	mm	121.5			
	P1	mm	43			
	P2	mm	42			
	R	mm	120.7			
	S1	mm	12			
	S2	mm	13.46			
	T	mm	53			
	V	mm	68			
	X	mm	17.5			
	Y	mm	19			
Cylinder stroke		mm	79.8			
Piston area		cm²	12.56			
Operating pressure max.		bar	45			
Working pressure		bar	10-30			
Repeatability accuracy		mm	±0.001			
Mass		kg	19.1			

SRG 4 F

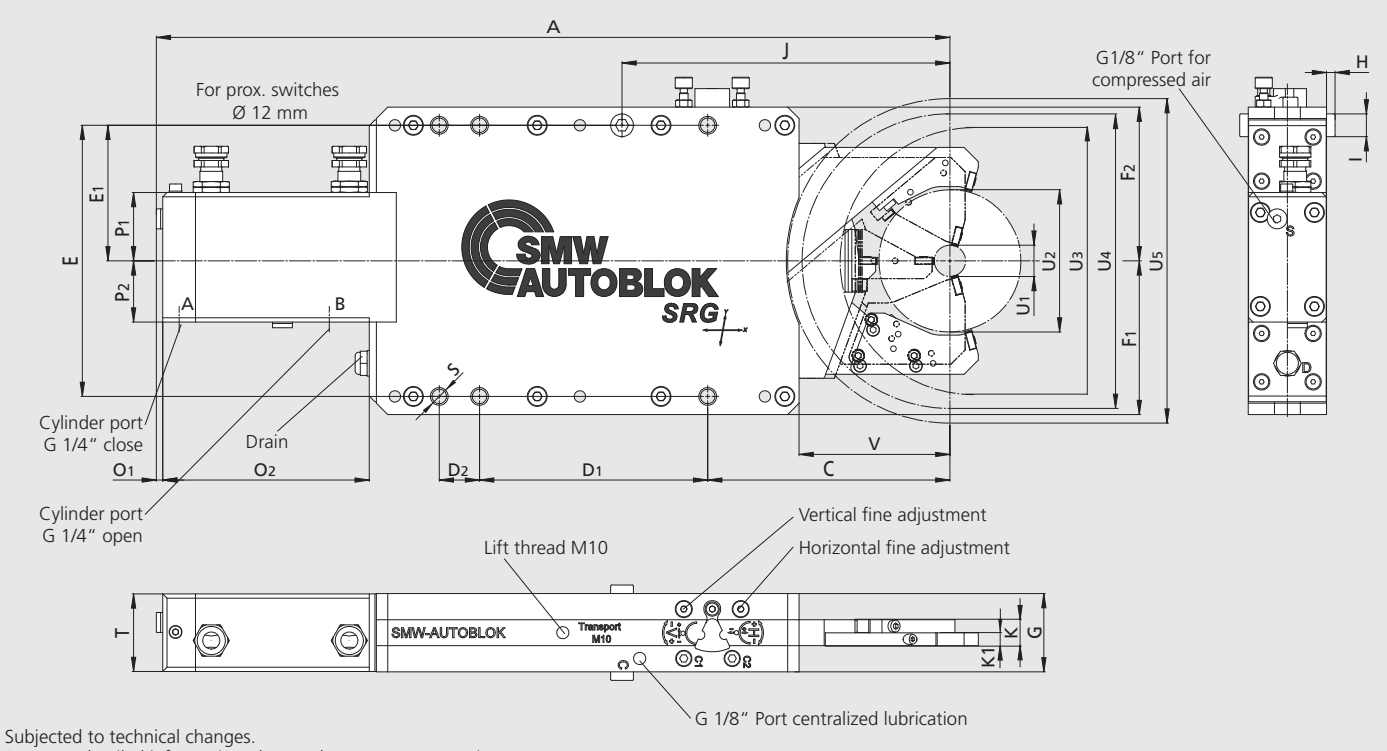

Subjected to technical changes.
For more detailed information please ask our customer service.

SMW-AUTOBLOK Type Id. No.			SRG 4 F 221930					
Clamping kit			**I**	**II**	**III**	**IV**	**V**	**VI**
Minimum clamping diameter	**U1**	mm	**22**	**35**	**48**	**61**	**74**	**87**
Maximum clamping diameter	**U2**	mm	**35**	**48**	**61**	**74**	**87**	**100**
Max. loading diameter (vertical, steady open)	**U3**	mm	**206**	**204**	**200**	**196**	**194**	**190**
Max. axial clearance diameter (steady open)	**U4**	mm	**218**	**219**	**219**	**220**	**222**	**224**
Max. swing diameter	**U5**	mm	**228**					
Horizontal adjustment range		mm	**± 0.20**					
Vertical adjustment range		mm	**± 0.14**					
	A	mm	557.6					
	C	mm	170.2					
	D1	mm	160.3					
	D2	mm	28.3					
	E	mm	190.5					
	E1	mm	95.25					
	F1	mm	108					
	F2	mm	108					
	G	mm	55					
	H	mm	6					
	I	mm	16					
	J	mm	230.4					
	K	mm	18.2					
	K1	mm	9					
	O1	mm	4.5					
	O2	mm	145.1					
	P1	mm	48					
	P2	mm	43					
	S	mm	M12 (6x)					
	T	mm	54.5					
	V	mm	106					
Cylinder stroke		mm	127.2					
Piston area		cm²	12.56					
Operating pressure max.		bar	30					
Working pressure		bar	7-25					
Repeatability accuracy		mm	±0.001					
Mass		kg	30					

SRG-B 4 F

Grinding Steady Rests

Dimensions and technical data

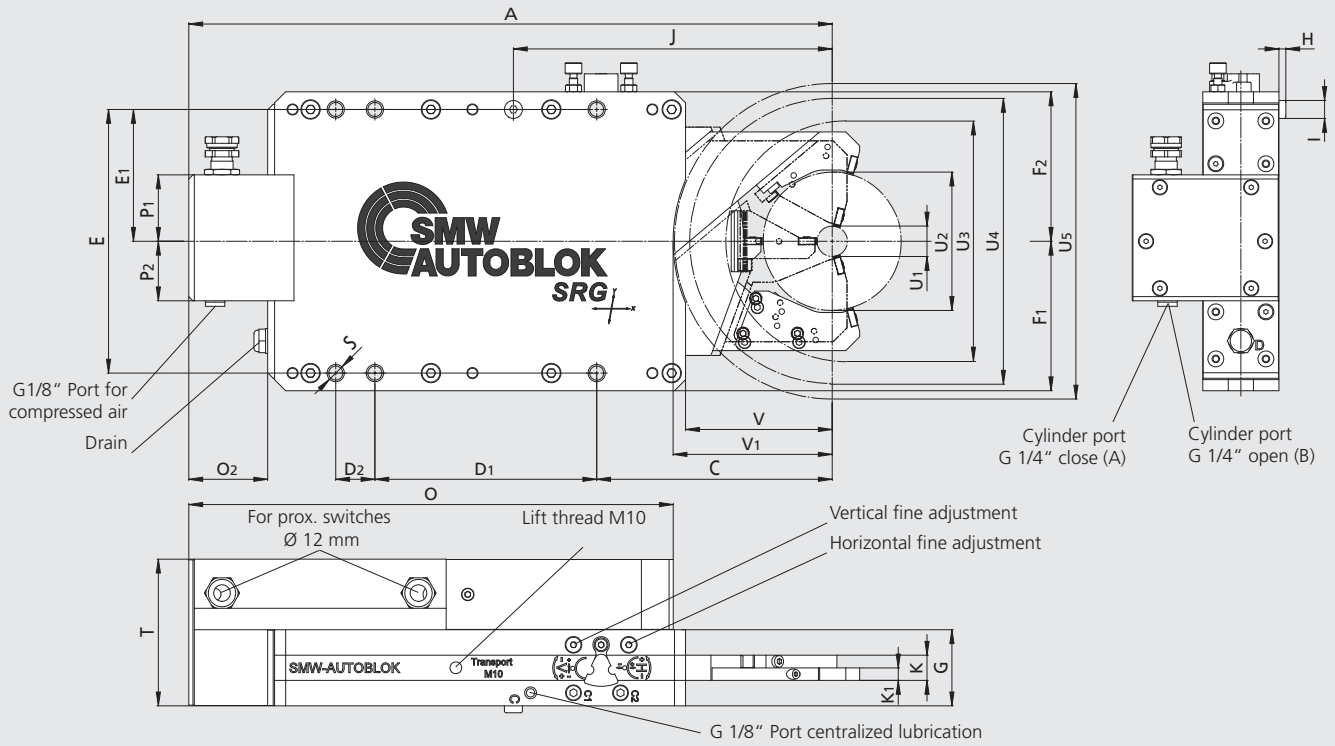

Subjected to technical changes.
For more detailed information please ask our customer service.

SMW-AUTOBLOK Type Id. No.			SRG-B 4 F 223140					
Clamping kit			**I**	**II**	**III**	**IV**	**V**	**VI**
Minimum clamping diameter	**U1**	mm	**22**	**35**	**48**	**61**	**74**	**87**
Maximum clamping diameter	**U2**	mm	**35**	**48**	**61**	**74**	**87**	**100**
Max. loading diameter (vertical, steady open)	**U3**	mm	**206**	**204**	**200**	**196**	**194**	**190**
Max. axial clearance diameter (steady open)	**U4**	mm	**218**	**218**	**218**	**220**	**222**	**224**
Max. swing diameter	**U5**	mm	**228**					
Horizontal adjustment range		mm	**± 0.20**					
Vertical adjustment range		mm	**± 0.14**					
	A	mm	465					
	C	mm	170.2					
	D1	mm	160.3					
	D2	mm	28.3					
	E	mm	190.5					
	E1	mm	95.25					
	F1	mm	108					
	F2	mm	108					
	G	mm	55					
	H	mm	5					
	I	mm	13					
	J	mm	230.4					
	K	mm	18.2					
	K1	mm	9					
	O	mm	350.1					
	O2	mm	57					
	P1	mm	48					
	P2	mm	43					
	S	mm	M12 (6x)					
	T	mm	106					
	V	mm	106					
	V1	mm	115					
Cylinder stroke		mm	127.2					
Piston area		cm²	10.02					
Operating pressure max.		bar	35					
Working pressure		bar	10-30					
Repeatability accuracy		mm	±0.001					
Mass		kg	37.8					

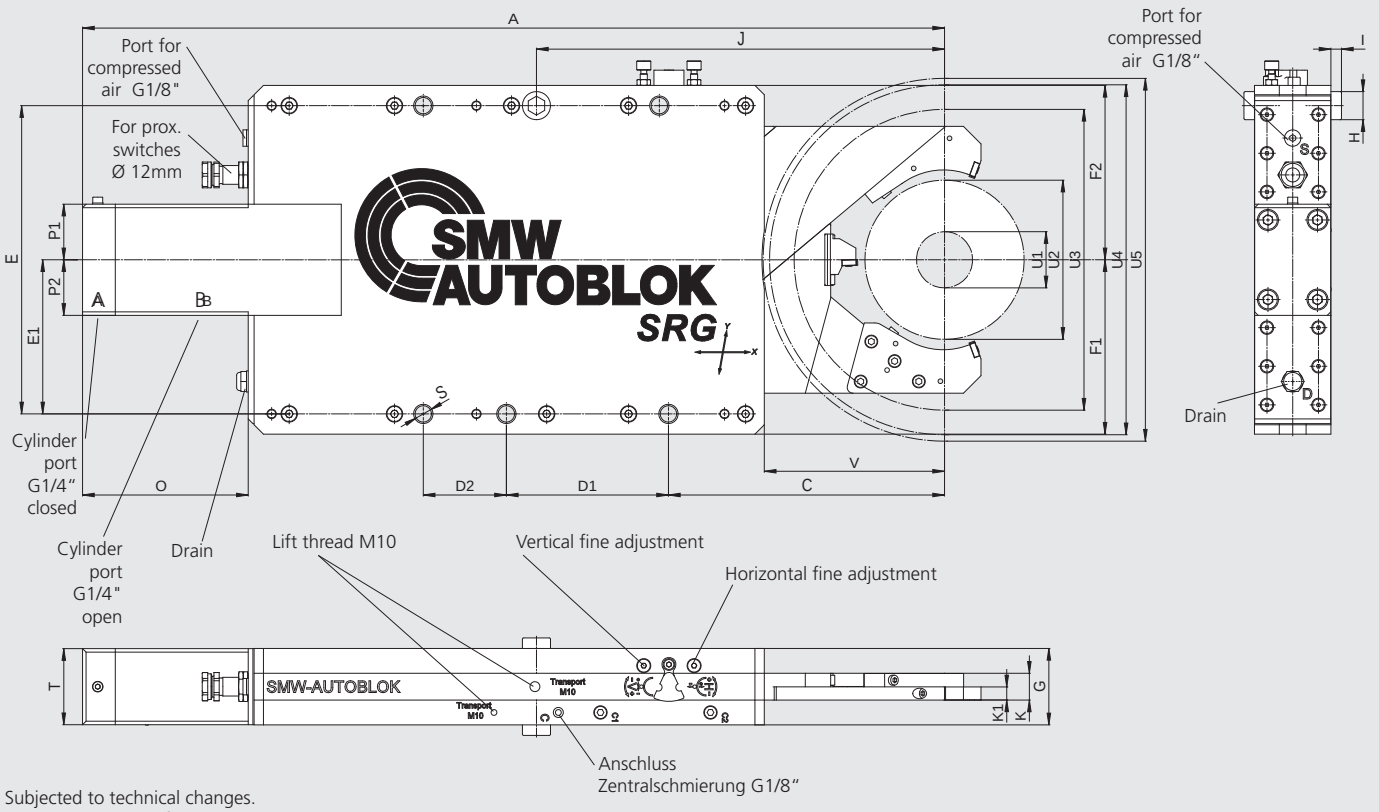

Subjected to technical changes.
For more detailed information please ask our customer service.

SMW-AUTOBLOK Type Id. No.			SRG 5 F 223774			
Clamping kit			**I**	**II**	**III**	**IV**
Minimum clamping diameter	**U1**	mm	**48**	**70**	**92**	**114**
Maximum clamping diameter	**U2**	mm	**70**	**92**	**114**	**136**
Max. loading diameter (vertical, steady open)	**U3**	mm	**273**	**267**	**263**	**257**
Max. axial clearance diameter (steady open)	**U4**	mm	**298**	**298**	**298**	**299**
Max. swing diameter	**U5**	mm	**310**			
Horizontal adjustment range		mm	**± 0.20**			
Vertical adjustment range		mm	**± 0.14**			
	A	mm	736.6			
	C	mm	235.9			
	D1	mm	138.5			
	D2	mm	71			
	E	mm	263.4			
	E1	mm	131.7			
	F1	mm	149			
	F2	mm	149			
	G	mm	65.3			
	H	mm	24			
	I	mm	9			
	J	mm	348.7			
	K	mm	22.9			
	K1	mm	11.3			
	O	mm	141.6			
	P1	mm	47.5			
	P2	mm	47.5			
	S	mm	14			
	T	mm	65			
	V	mm	154			
Cylinder stroke		mm	179			
Piston area		cm²	19.63			
Operating pressure max.		bar	30			
Working pressure		bar	7-25			
Repeatability accuracy		mm	±0.002			
Mass		kg	62.6			

SRG-B 5 F

Grinding Steady Rests

Dimensions and technical data

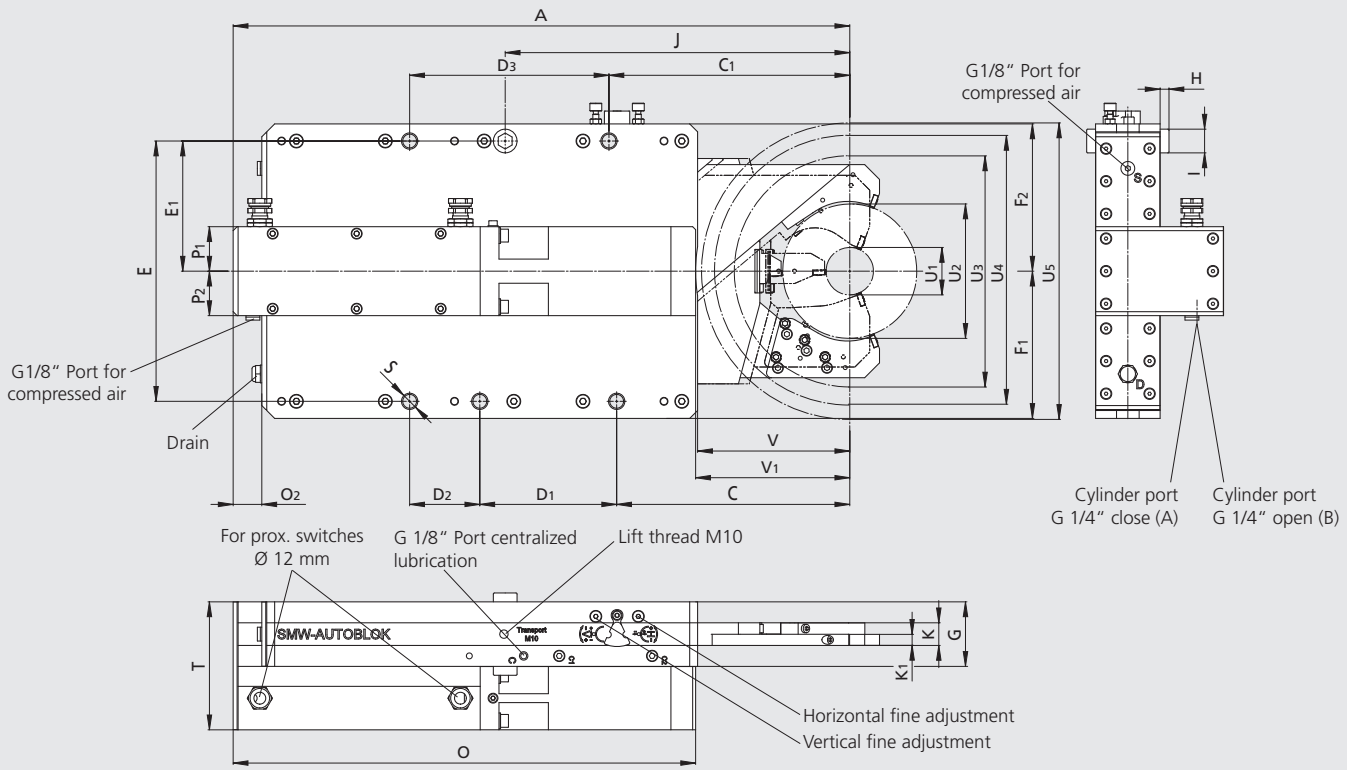

Subjected to technical changes.
For more detailed information please ask our customer service.

SMW-AUTOBLOK Type Id. No.			SRG-B 5 F 222530			
Clamping kit			**I**	**II**	**III**	**IV**
Minimum clamping diameter	**U1**	mm	**48**	**70**	**92**	**114**
Maximum clamping diameter	**U2**	mm	**70**	**92**	**114**	**136**
Max. loading diameter (vertical, steady open)	**U3**	mm	**273**	**267**	**263**	**257**
Max. axial clearance diameter (steady open)	**U4**	mm	**298**	**298**	**298**	**299**
Max. swing diameter	**U5**	mm	**310**			
Horizontal adjustment range		mm	**± 0.20**			
Vertical adjustment range		mm	**± 0.14**			
	A	mm	624			
	C	mm	235.9			
	C1	mm	243.7			
	D1	mm	138.5			
	D2	mm	71			
	D3	mm	201.7			
	E	mm	263.4			
	E1	mm	131.7			
	F1	mm	149			
	F2	mm	149			
	G	mm	65.3			
	H	mm	9			
	I	mm	24			
	J	mm	348.7			
	K	mm	22.9			
	K1	mm	11.1			
	O	mm	468			
	O2	mm	29			
	P1	mm	45			
	P2	mm	45			
	S	mm	M16 (5x)			
	T	mm	129.5			
	V	mm	154			
	V1	mm	156			
Cylinder stroke		mm	179			
Piston area		cm²	16.49			
Operating pressure max.		bar	35			
Working pressure		bar	10-30			
Repeatability accuracy		mm	±0.002			
Mass		kg	76.4			

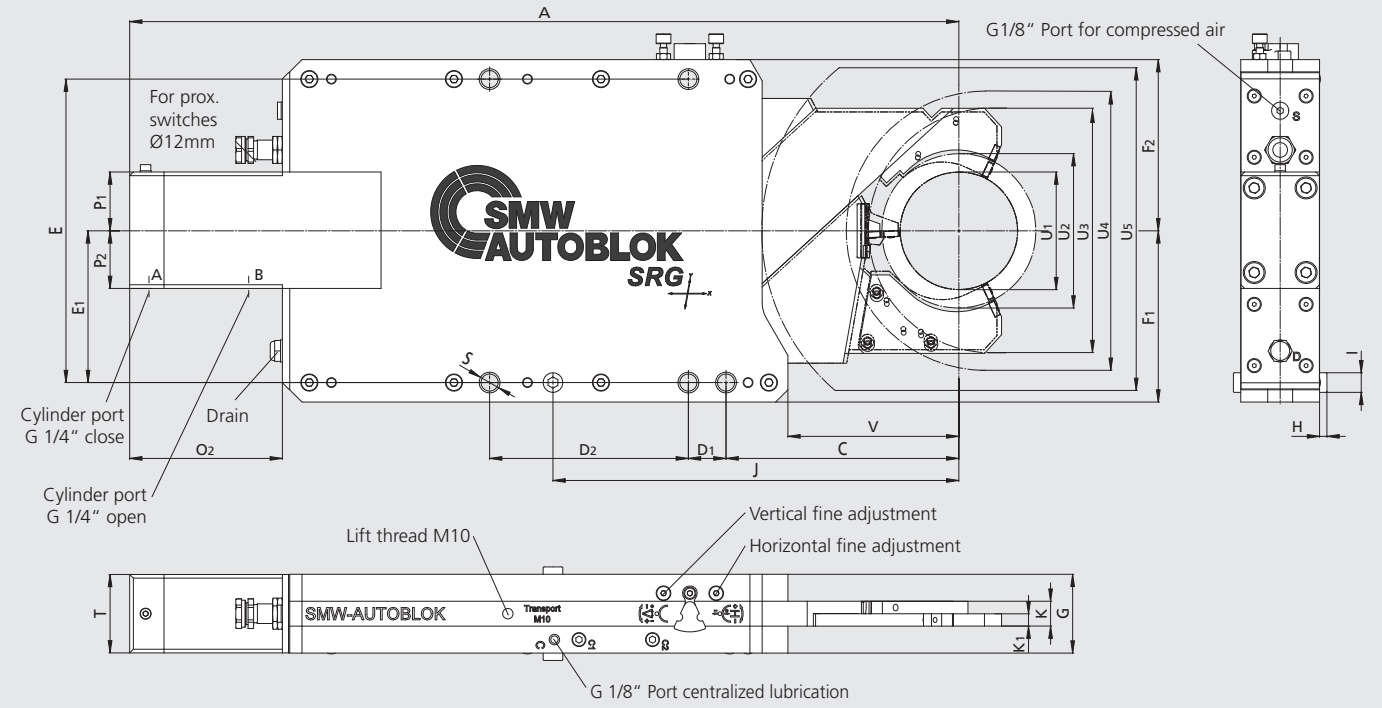

Subjected to technical changes.
For more detailed information please ask our customer service.

SMW-AUTOBLOK Type Id. No.			SRG 5.1 FS 222665				
Clamping kit			**I**	**II**	**III**	**IV**	**V**
Minimum clamping diameter	**U1**	mm	**96**	**102**	**108**	**114**	**120**
Maximum clamping diameter	**U2**	mm	**102**	**108**	**114**	**120**	**126**
Max. loading diameter (vertical, steady open)	**U3**	mm	**236**	**234**	**232**	**229**	**228**
Max. axial clearance diameter (steady open)	**U4**	mm	**272**	**272**	**272**	**272**	**272**
Max. swing diameter	**U5**	mm	**320**				
Horizontal adjustment range		mm	**± 0.22**				
Vertical adjustment range		mm	**± 0.17**				
	A	mm	676.6				
	C	mm	190				
	D1	mm	30.7				
	D2	mm	162.2				
	E	mm	247.6				
	E1	mm	123.8				
	F1	mm	139.7				
	F2	mm	139.7				
	G	mm	64.3				
	H	mm	6				
	I	mm	16				
	J	mm	331.2				
	K	mm	20.25				
	K1	mm	10				
	O2	mm	124.6				
	P1	mm	48				
	P2	mm	47				
	S	mm	17 (5x)				
	T	mm	64				
	V	mm	139.5				
Cylinder stroke		mm	167.1				
Piston area		cm²	19.63				
Operating pressure max.		bar	23				
Working pressure		bar	8-18.5				
Repeatability accuracy		mm	±0.002				
Mass		kg	54.8				

SLU-X® SLU-B	SLUA®-X SLUA®-B	SR®/-CL SRA	KLU/-A K	Our additional program: ■ Special Steady Rests ■ Turret Steady Rests ■ Crankshaft Steady Rests ■ Grinding Steady Rests

Steady Rests clamping big crankshaft

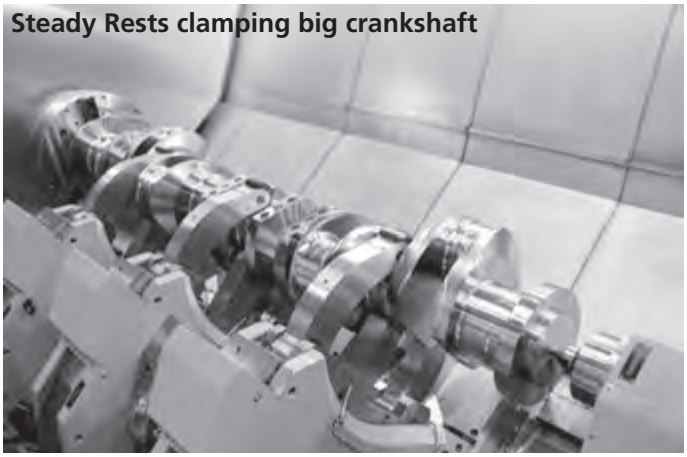
Steady Rests clamping big crankshaft

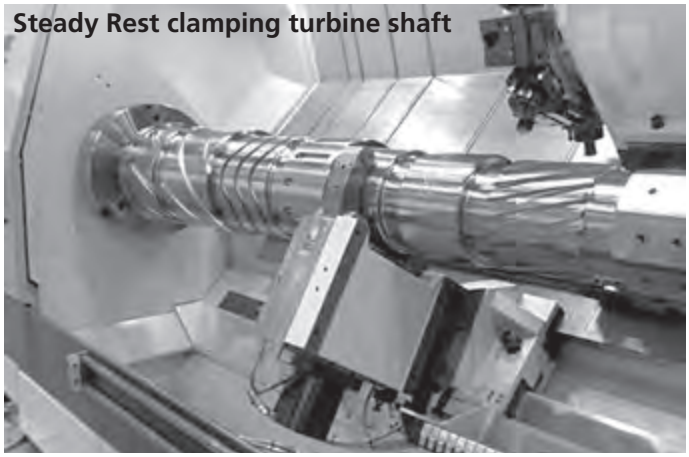
Steady Rest clamping turbine shaft

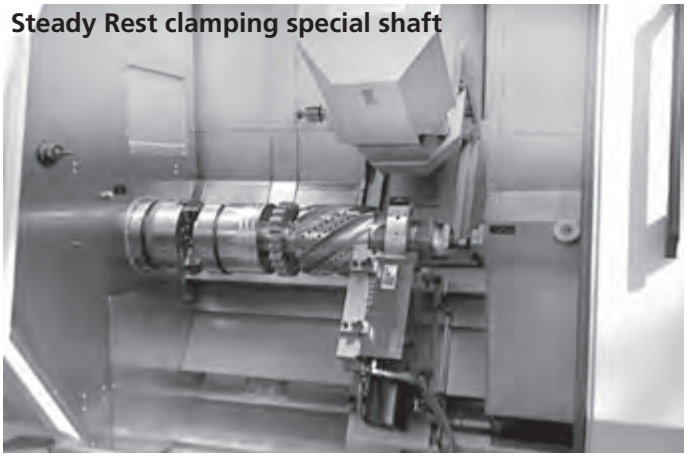
Steady Rest clamping special shaft

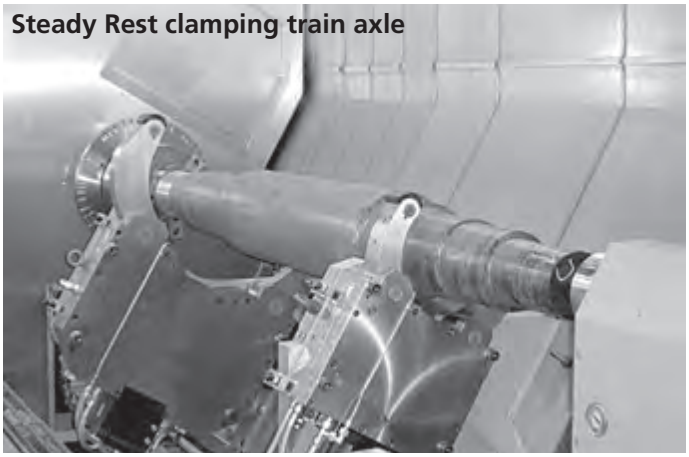
Steady Rest clamping train axle

Steady Rest with diamond pads clamping input shaft in hard turning/grinding operation

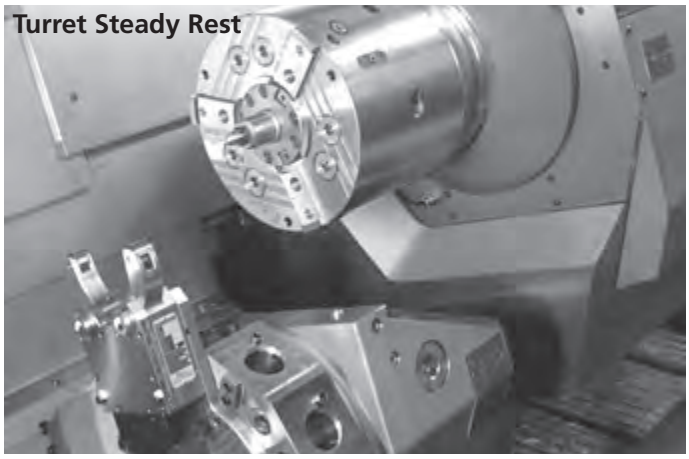
Turret Steady Rest

Steady Rest clamping aircraft shaft

Stationary chucks pneumatic/hydraulic

Page 370

USC
With stroke control

Pneumatic static cylinder
Ø 140 - 260 mm

- Unit with static cylinder
- With stroke control
- Can be equipped with different types of chucks

Page 372

US-CL
With 2 jaws long stroke chucks

US-A
With 3 jaws long or normal stroke chucks

Stationary cylinder and chuck unit, hydraulic
Ø 80 - 315 mm

- Unit with static cylinder and chuck
- Closed center chucks type CL/AN/AL

Page 374

US-Large diameters
Pneumatic static cylinder
2 or 3 or 4 jaws

Pneumatic static cylinder and chuck unit
Ø 400 - 800 mm

- Normal or long stroke depending on chuck model
- 2/3/4 jaws depending on chuck model & diameter
- Sealed or not sealed chucks depending on chuck model

Page 376

HB-D
INCH SERRATION
2 or 3 jaws

HB-C
TONGUE & GROOVE
3 jaws

Stationary chuck, hydraulic
Ø 130 - 315 mm

- Built-in hydraulic cylinder
- 2 and 3 jaws

Page 378

PB-D
INCH SERRATION
2 or 3 jaws

PB-C
TONGUE & GROOVE
3 jaws

Stationary chuck, pneumatic
Ø 130 - 315 mm

- Built-in pneumatic cylinder
- 2 and 3 jaws

Page 380

STP
INCH SERRATION
3 jaws

Stationary chuck, pneumatic
Ø 125 - 280 mm

- Built-in pneumatic cylinder
- With through-hole

Page 382

M2-PB
Fixture
with 2 chucks

Multiple chucks on fixtures, pneumatic
Ø 130 - 315 mm

- Built-in pneumatic cylinders
- 2 and 3 jaws

Page 384

PBI-D
INCH SERRATION
2 or 3 jaws

PBI-C
TONGUE & GROOVE
3 jaws

Chuck for indexing tables
Ø 165 - 315 mm

- Manifold for air supply (only for low r.p.m.)
- Built-in cylinder
- 2 and 3 jaws

USC

Pneumatic static cylinder

Stationary cylinder + chuck unit Ø 140 - 260 mm

- Can be equipped with different types of chucks
- With stroke control

Application/customer benefits

- Gripping of components on vertical or horizontal machining centers.

Technical features

- Standard pneumatic cylinder can be equipped with various type of chucks:
  - 2/3/4 jaws versions depending on chuck model and diameter
  - Sealed or not sealed chucks
  - With serrated or Tongue & Groove master jaw available
  - Normal or long stroke depending on chuck model and diameter
- Permanent air pressure required
- Optional SAB safety valve to hold pressure during pallet transfer

Remark: The clamping unit is made of static cylinder + connection kit + chuck to be selected.
For chuck details, please see the technical data of the selected chuck.

Standard equipment

Static cylinder
the connection kit must be added,
see the table on next page

Ordering example

Please see the below table for part numbers and part descriptions.

Accessories

Valve SAB1 Id. No. 27581610 for USC 140/170
Valve SAB2 Id. No. 27581620 for USC 210/260
Mounting brackets

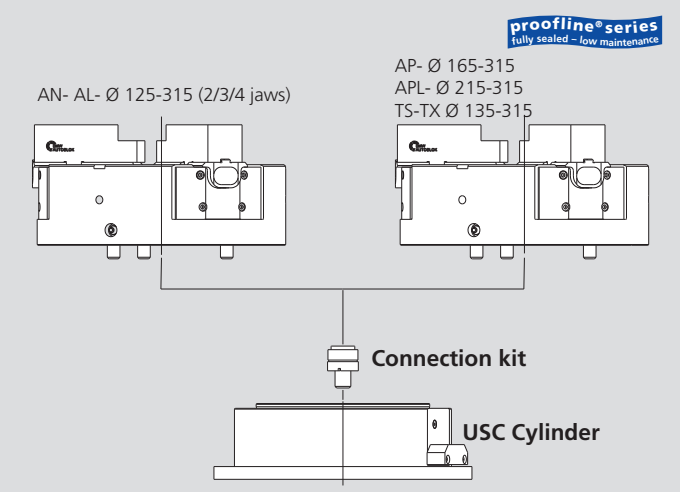

- **USC-AN** = cylinder equipped with a 2/3/4 jaw chuck type AN- (normal stroke). Chuck until to Ø 315 mm
- **USC-AL** = cylinder equipped with a 2/3/4 jaw chuck type AL- (long stroke). Chuck until to Ø 315 mm
- **USC-TS** = cylinder equipped with a 2/3 jaw chuck type TS- Chuck from Ø 135 to 315 mm
- **USC-TX** = cylinder equipped with a 2/3 jaw chuck. Chuck from Ø 170 to 315 mm
- **USC-AP** = cylinder equipped with a 3 jaw chuck type AP- (normal stroke). Chuck until to Ø 315 mm proofline® series fully sealed – low maintenance
- **USC-APL** = cylinder equipped with a 3 jaw chuck type APL- (long stroke). Chuck Ø 170 to 315 mm proofline® series fully sealed – low maintenance

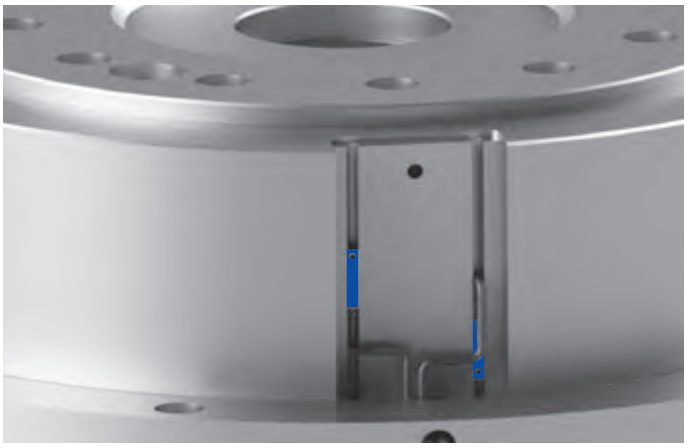

Stroke control
The stroke control system consists of two built in magnets and two external sensors (Id.-Nr. 71834910) reading the axial position of the cylinder piston and consequently of chuck jaws mounted on it.
The stroke control gives the following signals: „chuck fully open", „chuck fully closed" or „part clamped" positions.

Technical data

SMW-AUTOBLOK Type Id. No.		USC 140 97501407	USC 170 97501702	USC 210 97502106	USC 260 97502601
Piston area-chuck (open)	cm²	133	189	269	434
Piston area-chuck (closed)	cm²	126	176	249	409
Max. operating pressure	bar	7	7	7	7
Piston stroke	mm	17	22	26	31
Pushforce at 6 bar	kN	8	11	16	26
Pullforce at 6 bar	kN	7.5	10.5	15	24.5
Cylinder unit mass	kg	3.3	5	7	12.5

Stationary cylinder + chuck unit Ø 140 - 260 mm

USC

- Can be equipped with different types of chucks
- With stroke control

Pneumatic static cylinder

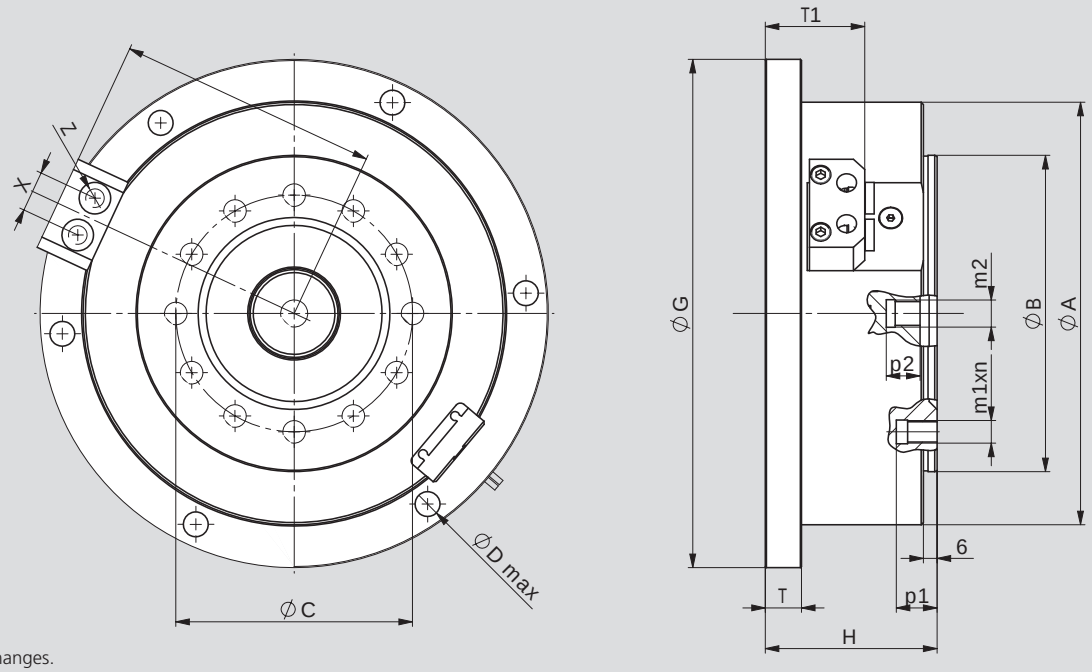

Subject to technical changes.
For more detailed information please ask our customer service.

SMW-AUTOBLOK Type Id. No.		USC 140 97501407	USC 170 97501702	USC 210 97502106	USC 260 97502601
A	mm	162	187	217	275
B	mm	115	140	170	220
C	mm	82.6	104.8	133.4	171.4
D	mm	11	11	11	13
G	mm	200	225	255	327
H	mm	61.5	76	83	95
Q	mm	98	110.5	129.5	158.5
T	mm	16	16	16	16
T1	mm	38.5	40,5	43.5	43.5
X	mm	18	18	22	22
Z	mm	1/8"	1/8"	1/4"	1/4"
m1	mm	M10	M10	M12	M16
m2	mm	M10	M12	M16	M20
n	mm	12x	12x	12x	12x
p1	mm	14	18	19	23
p2	mm	18	15	21	25

Ordering review connection kit

Size	125 AN-AL	135 TS	165 AN-AL	170 AP	170 TS/TX	210 AN-AL	210 TS-TX	215 AP-APL	250 AN-AL	250 TS-TX	260 AP-APL	315 AN-AL	315 TS-TX	315 AP-APL
USC 140	75511410	75511470	-	-	-	-	-	-	-	-	-	-	-	-
USC 170	-	-	75511760	75511760	75511770	-	-	-	-	-	-	-	-	-
USC 210	-	-	-	-	-	75512110	75512170	75512160	-	-	-	-	-	-
USC 260	-	-	-	-	-	-	-	-	75512610	75512670	75512660	75512620	75512670	75512660

- If the cylinder must operate an AN/AL chuck (with 2/3/4 jaws and various jaw types), the chuck must be ordered separately.
- If the cylinder must operate an AP/APL chuck (only 3 jaws available and various jaw types), the chuck must be ordered separately.
- If the cylinder must operate a TS/TX chuck (only 3 jaws available and various jaw types), the chuck must be ordered separately.
- For technical information on the chucks, please see the specific catalogue page. (more information at general catalog turning)
- For the chucks p/ns, please see our price lists or ask a quotation to your nearest SMW-AUTOBLOK office.

JAWS-CATALOG
Request or download: www.smw-autoblok.de

US-CL

With 2 jaw long stroke chuck

US-A

With 3 jaw long or normal stroke chuck

Stationary cylinder + chuck unit Ø 80 - 315 mm

- Hydraulic cylinder module + chuck
- Closed center chucks type CL/AN/AL

Application/customer benefits

- Gripping units designed to suit special purpose machines and transfer lines
- Also used as loading chucks to handle workpieces

Technical features

- Stationary hydraulic cylinder + chuck unit consisting of a modular cylinder and standard 2- or 3-jaw-chuck
- Permanent oil pressure required
- For chuck details please see technical data of the selected chuck

Remark: when ordering please specify the position of the oil connectors (on the side or on the back)

Standard equipment

Standard chuck with cylinder and connecting parts

Ordering example

US 125-CLC with rear oil connection, or
US 250-AND with side oil connection and chuck 90° revolved

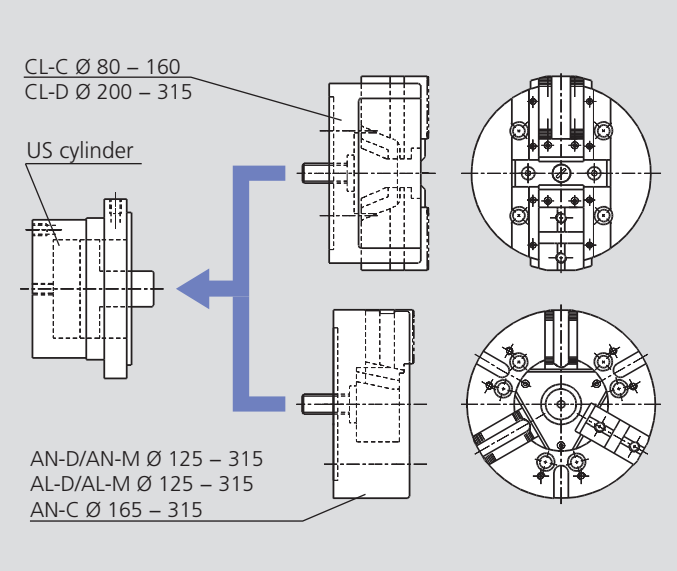

- **US-CL-C** = cylinder equipped with a 2 jaw chuck type CL-C (long stroke/tongue & groove). Chuck Ø 80 to 160 mm.
- **US-CL-D** = cylinder equipped with a 2 jaw chuck type CL-D (long stroke/inch serration). Chuck Ø 200 to 315 mm.
- **US-AN-D** = cylinder equipped with a 3 jaw chuck type AN-D (normal stroke/inch serration). Chuck Ø 125 to 315 mm.
- **US-AN-M** = cylinder equipped with a 3 jaw chuck type AN-M (normal stroke/metric serration). Chuck Ø 125 to 315 mm.
- **US-AL-D** = cylinder equipped with a 3 jaw chuck type AL-D (long stroke/inch serration). Chuck Ø 125 to 315 mm.
- **US-AL-M** = cylinder equipped with a 3 jaw chuck type AL-M (long stroke/metric serration). Chuck Ø 125 to 315 mm.
- **US-AN-C** = cylinder equipped with a 3 jaw chuck type AN-C (normal stroke/tongue & groove). Chuck Ø 165 to 315 mm.
- **Special units** = on request the US cylinder can be equipped with other chucks, for example with a quick jaw change chuck type AN-RM with stationary cylinder available.

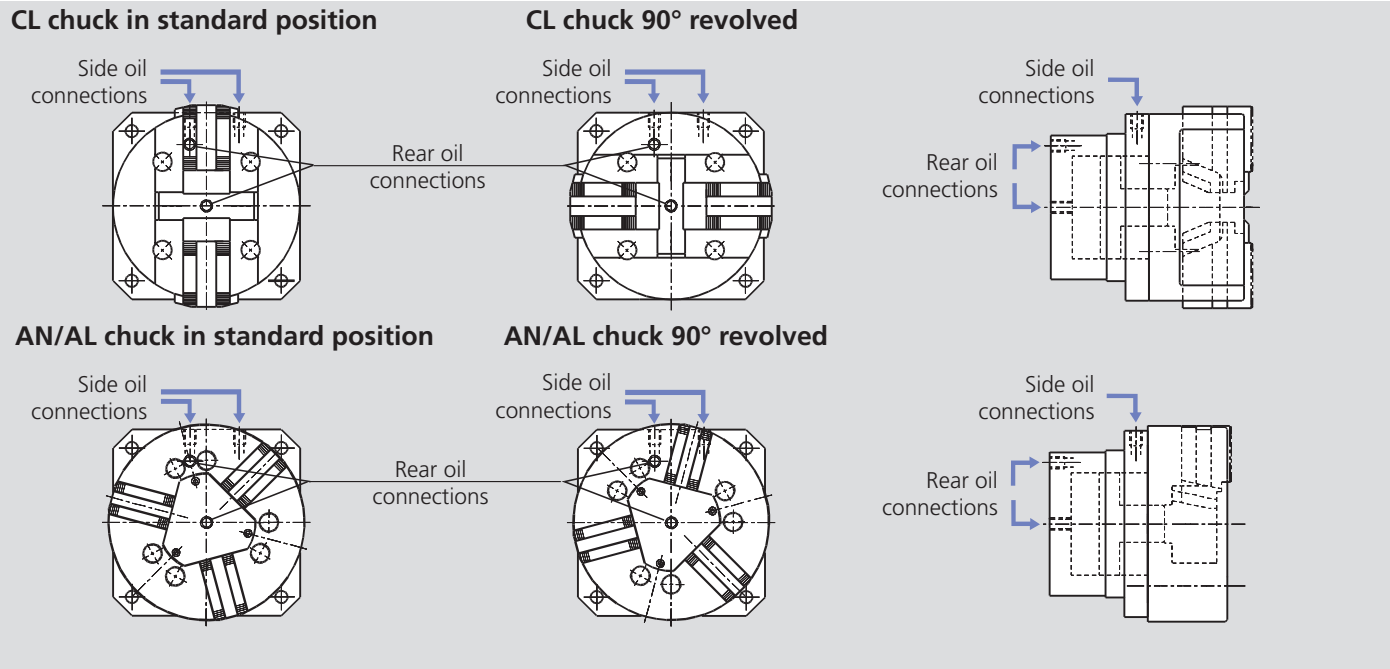

- The chuck can be mounted on the cylinder 90° revolved if the standard position creates interferences with the working cycle. Please specify in the order, if a revolved position is needed.
- The oil connections can be on the side or on the back of the cylinder in order to ease the installation of the gripping unit. Please specify in the order, which version is preferred.

Stationary cylinder + chuck unit Ø 80 - 315 mm

- Hydraulic cylinder module + chuck
- Closed center chucks type CL/AN/AL

US-CL

With 2 jaw long stroke chuck

US-A

With 3 jaw long or normal stroke chuck

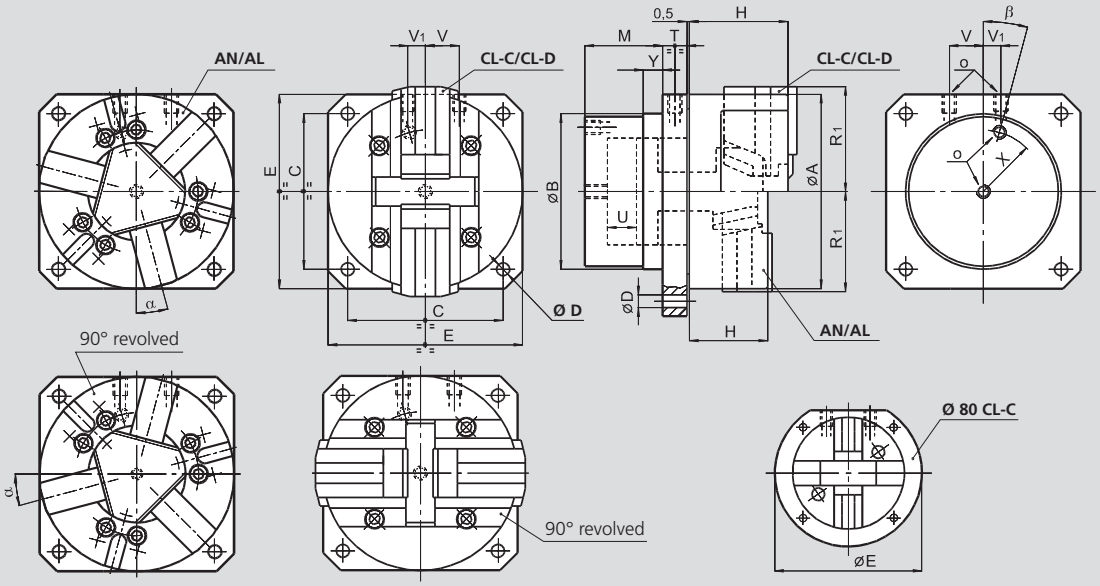

Subject to technical changes.
For more detailed information please ask our customer service.

US actuating cylinder dimensions

SMW-AUTOBLOK cylinder			US 80	US 100	US 125	US 160 US 165	US 200	US 250	US 315
Id. No. CL			77755008	77755010	77755013	77755016	77755120	77755025	77755031
Id. No. AL/AN			77755008	77755010	77755113	77755016	77755120	77755025	77755031
	B h7	mm	70	84	106	128	158	185	185
	C	mm	66	84	104	130	160	200	250
	D	mm	7	9	11	11	13.5	17	17
	E	mm	105	100	130	160	200	250	315
	M	mm	45	52	60	70	80	90	90
Oil connections	**O**	inch	1/8 BSP	1/8 BSP	1/4 BSP	1/4 BSP	3/8 BSP	3/8 BSP	3/8 BSP
	T	mm	16	16	20	20	25	25	25
	U	mm	11	14	20	25	30	35	35
	V	mm	15	18	12	28	35	41	41
	V1	mm	15	18	12	15	18	15	15
	X	mm	27	33	43	52	63	75	75
	Y	mm	10	10	10	20	20	20	20
	β	deg.	30°	30°	15°	15°	0°	0°	0°
Piston area		cm²	16	25	42	68	112	166	166

Units with CL-C and CL-D chucks (more information at general catalog turning page 82)

SMW-AUTOBLOK Type			US 80-CL-C	US 100-CL-C	US 125-CL-C	US 160-CL-C	US 200-CL-D	US 250-CL-D	US 315-CL-D
	A	mm	80	100	125	160	200	250	315
	H	mm	45	54	76	92	103	109	114
Chuck open	**R1**	mm	40	50	68	87	108	132	166
Max. pressure		bar	38	36	36	37	32	30	36
Max. gripping force		kN	9	14	24	40	55	78	95

Units with AN-D/AN-M/AN-C chucks (more information at general catalog turning page 42 and 46)

SMW-AUTOBLOK Type			US 125-AN-D US 125-AN-M	US 165-AN-D US 165-AN-M US 165-AN-C	US 210-AN-D US 210-AN-M US 210-AN-C	US 250-AN-D US 250-AN-M US 250-AN-C	US 315-AN-D US 315-AN-M US 315-AN-C
	A	mm	127	165	210	254	315
	H	mm	57	71	85	95	105
Chuck open	**R1**	mm	64	83	105	128	158
	α	deg.	0°	15°	15°	15°	15°
Max. pressure		bar	47	36	31	28	36
Max. gripping force		kN	56	70	105	140	180

Units with AL-D/AL-M chucks (more information at general catalog turning page 44)

SMW-AUTOBLOK Type			US 125-AL-D US 125-AL-M	US 165-AL-D US 165-AL-M	US 210-AL-D US 210-AL-M	US 250-AL-D US 250-AL-M	US 315-AL-D US 315-AL-M
	A	mm	127	165	210	254	315
	H	mm	57	71	85	95	105
Chuck open	**R1**	mm	67	86	109	133	164
	α	deg.	0°	15°	15°	15°	15°
Max. pressure		bar	60	44	45	39	45
Max. gripping force		kN	45	54	90	120	135

JAWS-CATALOG
Request or download: www.smw-autoblok.de

US-Large Diameters

Pneumatic static cylinder for 2 or 3 or 4 jaws

Stationary cylinder + chuck unit Ø 400 - 800 mm

- **Option for serrated or Tongue & Groove jaws**
- **Option of sealed or not sealed chucks**
- **Option of 2/3/4 jaws depending on chuck size and model**
- **Option of long or normal stroke depending on chuck size & model**

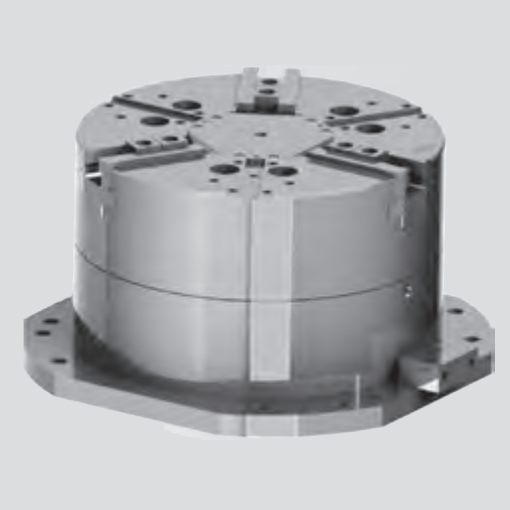

Application/customer benefits

- Gripping of large components on vertical or horizontal machining centers.

Technical features

- Standard pneumatic cylinder to be equipped with various type of chucks:
  - 2/3/4 jaws versions depending on chuck model and diameter
  - Sealed or not sealed chucks with serrated or TONGUE & GROOVE master jaw available
  - Normal or long stroke depending on chuck model and diameter
- Permanent air pressure required
- Optional SAB safety valve to hold pressure during pallet transfer

Remark: the clamping unit is made of standard cylinder + eventual connection kit (for AP and APL chucks only) + chuck to be selected.
For chuck details, please see the technical data of the selected chuck.

Standard equipment

Static cylinder with connecting parts for IN/IL chucks.
For AP and APL chucks a specific connecting kit must be added.

Ordering example

Please see the below table for part numbers and part descriptions.

AN- AL- Ø 400 (2/3/4 jaws)
IN- IL- Ø 500-630-800 (3/4 jaws)

AP- Ø 400
APL- Ø 400-500-630-800 (3 jaws only)

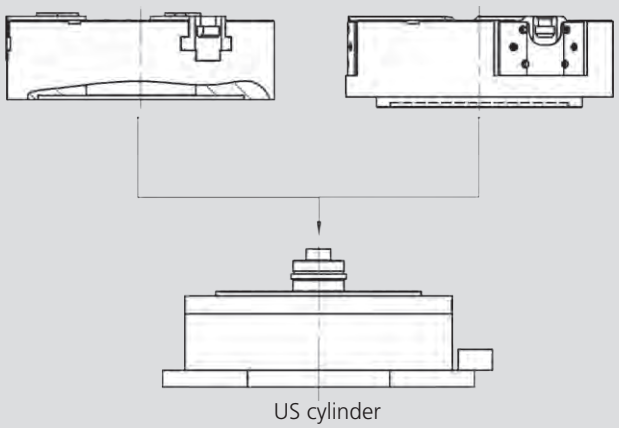

US cylinder

- **US-AN** = cylinder equipped with a 3 jaw chuck type AN- (normal stroke). Chuck Ø 400 mm
- **US-AL** = cylinder equipped with a 3 jaw chuck type AL- (long stroke). Chuck Ø 400 mm
- **US-IN** = cylinder equipped with a 3 jaw chuck type IN- (normal stroke). Chuck Ø 500 to 800 mm
- **US-IL** = cylinder equipped with a 3 jaw chuck type IL- (long stroke). Chuck Ø 500 to 800 mm
- **US-AP** = cylinder equipped with a 3 jaw chuck type AP- (normal stroke). Chuck Ø 400 mm
- **US-APL** = cylinder equipped with a 3 jaw chuck type APL- (long stroke). Chuck Ø 400 to 800 mm

Technical data

SMW-AUTOBLOK Type		US-400 AN/AL	US-400 AP/APL	US-500 APL	US-630 APL	US-800 APL	US-500 IN/IL	US-630 IN/IL	US-800 IN/IL
Piston area-chuck (open)	cm²	800	800	1256	1256	1256	1256	1256	1256
Piston area-chuck (closed)	cm²	760	760	1211	1211	1211	1211	1211	1211
Max. operating pressure	bar	7	7	7	7	7	7	7	7
Mass of cylinder unit	kg	118	118	175	175	175	175	175	175
Gripping force at 6 bar "N"	kN	135	125	-	-	-	175	175	175
Gripping force at 6 bar "L"	kN	80	80	130	130	130	130	130	130

Stationary cylinder + chuck unit Ø 400 - 800 mm

- Option for serrated or Tongue & Groove jaws
- Option of sealed or not sealed chucks
- Option of 2/3/4 jaws depending on chuck size and model
- Option of long or normal stroke depending on chuck size & model

US-Large Diameters

Pneumatic static cylinder for 2 or 3 or 4 jaws

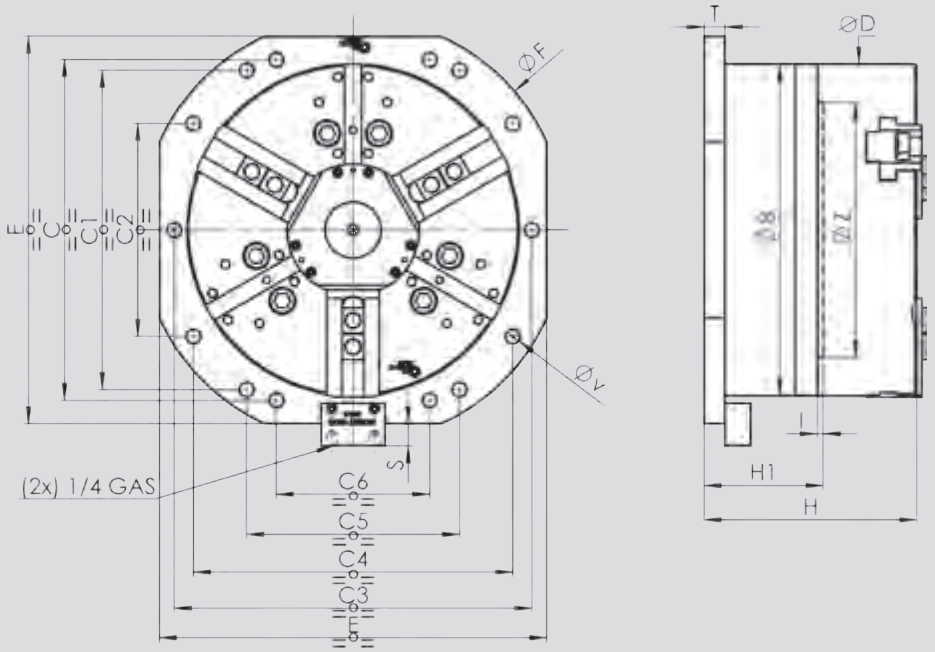

Subject to technical changes.
For more detailed information please ask our customer service.

SMW-AUTOBLOK Type			US-400 AN/AL	US-400 AP/APL	US-500 APL	US-630 APL	US-800 APL	US-500 IN/IL	US-630 IN/IL	US-800 IN/IL
O. D. cylinder	**B**	mm	390	390	475	475	475	475	475	475
	C	mm	400	400	-	-	-	-	-	-
	C1	mm	375	375	300	300	300	300	300	300
	C2	mm	250	250	-	-	-	-	-	-
	C3	mm	-	-	500	500	500	500	500	500
	C4	mm	375	375	400	400	400	400	400	400
	C5	mm	250	250	-	-	-	-	-	-
	C6	mm	180	180	-	-	-	-	-	-
Ø chuck	**D**	mm	390	390	500	630	800	510	630	800
	E	mm	455	455	525	525	525	525	525	525
	E1	mm								
	ØF	mm	500	500	538	538	538	538	538	538
	H	mm	250	273	300	310	330	270	290	290
	H1	mm	140	140	146	146	146	146	146	146
	I	mm	7	7	7	7	7	7	7	7
	T	mm	25	25	25	25	25	25	25	25
	ØV	mm	17	17	17	17	17	17	17	17
	ØZ h7	mm	300	300	380	380	380	380	380	380

Ordering review

SMW-AUTOBLOK Size	400	500	630	800
A: Cylinder Id. No. (for all versions)	97504004	97506302	97506302	97506302
B: Kit Id. No. (only for „AP" & „APL" chucks)	97634004	97635002	97636302	97646302

- If the cylinder must operate a IN/IL or a AN/AL chuck (with 2/3/4 jaws and various jaw types), only the p/n in line A must be purchased. The chuck must be ordered separately.
- If the cylinder must operate a AP/APL chuck (only 3 jaws available and various jaw types), both p/ns in line A and B must be purchased. The chuck must be ordered separately.
- For technical information on the chucks, please see the specific catalogue page. (more information at general catalog turning)
- For the chucks p/ns, please see our price lists or ask a quotation to your nearest SMW-AUTOBLOK office.

JAWS-CATALOG
Request or download: www.smw-autoblok.de

HB-D

INCH SERRATION
2 or 3 jaws

HB-C

TONGUE & GROOVE
3 jaws

Stationary chuck, hydraulic Ø 130 - 315 mm

- Built-in hydraulic cylinder
- 2 and 3 jaws

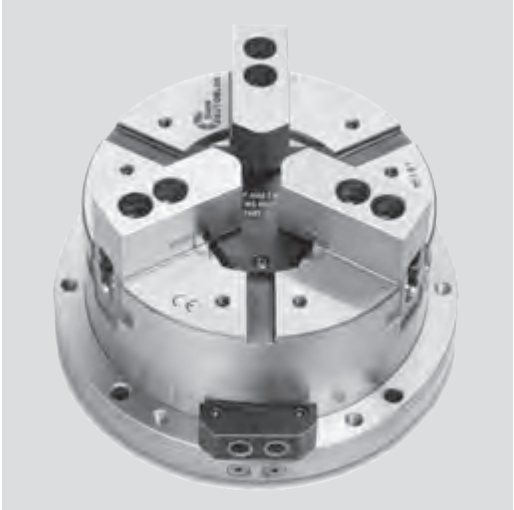

Application/customer benefits

- Stationary hydraulic chuck for self centering clamping of parts on milling machines, machining centers and special machines

HB-D: INCH SERRATED master jaws (1/16" x 90°)
HB-C: TONGUE & GROOVE master jaws (American standard)
HB-M: METRIC SERRATED master jaws (1.5 mm x 60°) **on request from Ø 165**

Technical features

- Stationary chuck consisting of a 2/3 jaw self centering chuck with built-in hydraulic cylinder
- Compact design
- Case hardened body to assure highest precision and long chuck life

Standard equipment

Stationary chuck
1 set T-nuts with bolts
(HB-C excluded)
1 set of soft blank top jaws
(HB-C excluded)

Ordering example

Stationary chuck HB-C 250 (3 Jaws)
or
Stationary chuck HBL-D2 165 (2 Jaws)

Technical data

SMW-AUTOBLOK Type		HB-D 130	HB-D 165 HB-C 165	HB-D 210 HB-C 210	HB-D 250 HB-C 250	HB-D 315 HB-C 315
Radial jaw stroke	mm	3	3.2	4	4.6	5.5
Radial jaw stroke HBL-D2 (2 jaws)*	mm	5.6	6	7.5	8.8	10.5
Piston area	cm^2	63	79	114	167	203
Max. operating pressure	bar	30	30	30	30	30
Gripping force at 25 bar	kN	50	55	85	125	150
Gripping force at 25 bar HBL-D2 (2 jaws)*	kN	28	35	52	75	90
Weight (without top jaws)	kg	9.5	18	30	44	69

* The 2 jaw fixture is available with serrated master jaws (inch or metric) and long stroke only.

JAWS-CATALOG

Request or download:
www.smw-autoblok.de

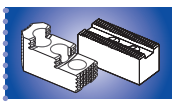

SMW-AUTOBLOK
396

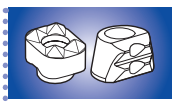

SMW-AUTOBLOK
400

Stationary chuck, hydraulic Ø 130 - 315 mm

- Built-in hydraulic cylinder
- 2 and 3 jaws

HB-D

INCH SERRATION
2 or 3 jaws

HB-C

TONGUE & GROOVE
3 jaws

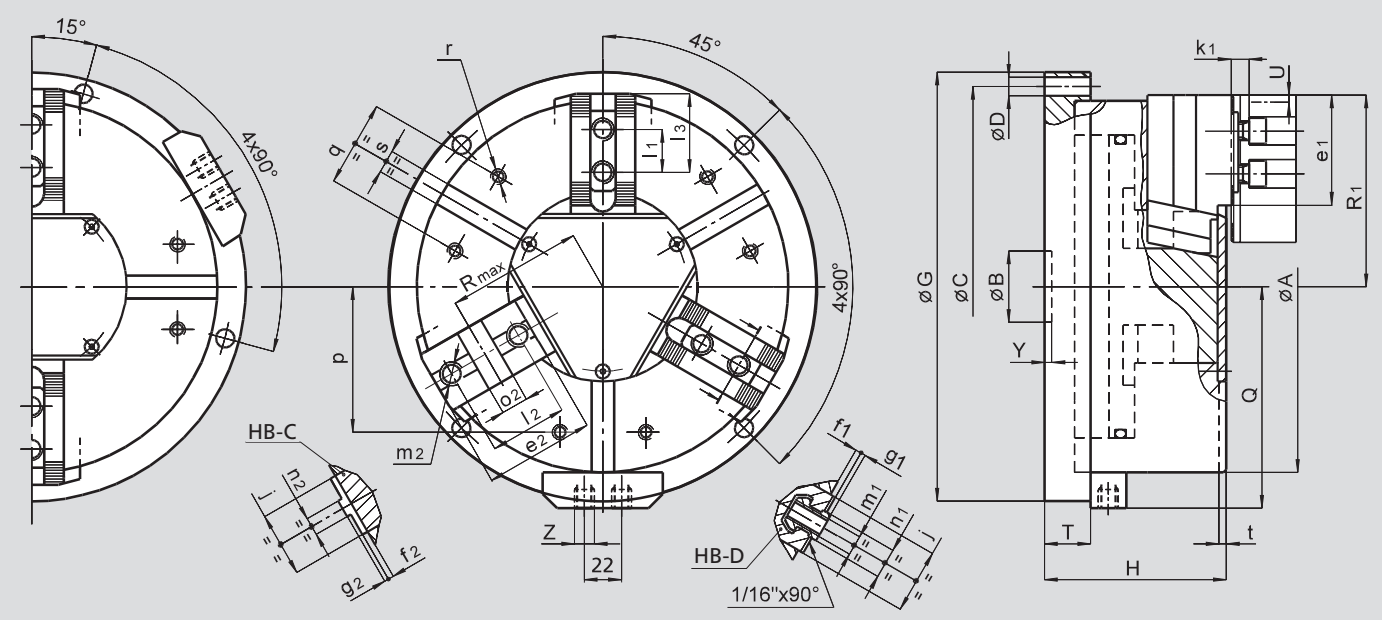

Subject to technical changes.
For more detailed information please ask our customer service.

Common dimensions

SMW-AUTOBLOK Type			HB-D 130	HB-D 165 HB-C 165	HB-D 210 HB-C 210	HB-D 250 HB-C 250	HB-D 315 HB-C 315
	A	mm	135	170	215	260	315
	B	mm	30	30	35	50	50
Fixing holes circle	**C**	mm	155	190	235	280	340
Fixing holes diameter	**D**	mm	9	11	11	13	13
	G	mm	175	210	255	300	360
	H	mm	89	100	117	127	141
	Q	mm	92.5	110	133	155	183
	T	mm	25	27	30	32	32
Radial jaw stroke (3 jaws)	**U**	mm	3	3.2	4	4.6	5.5
Radial jaw stroke HBL-D2 (2 jaws)	**U**	mm	5.6	6	7.5	8.8	10.5
	Y	mm	5	5	5	5	5
Hydraulic connections	**Z**	inch	R1/4"	R1/4"	R1/4"	R1/4"	R1/4"
	j	mm	26	30	36	45	45
	k1	mm	10	10	11	12	12
	p	mm	52	65	80	102	120
	q	mm	30	36	45	60	60
	r	mm	M6	M8	M8	M10	M10
	s H12	mm	12	16	16	16	16
	t	mm	3.5	5	5	5	5

HB-D and HBL-D2 fixtures dimensions

SMW-AUTOBLOK Type			HB-D 130	HB-D 165	HB-D 210	HB-D 250	HB-D 315
	e1	mm	45	48	60	77	99
	f1	mm	3	4	3	4	4
	g1	mm	2.5	2.5	2.5	3.5	3.5
	l1	mm	16	16.5	23	30	30
T-nut position min./max.	**l3**	mm	23/30	24/40	33/50	43/62	43/84
	m1	mm	M8	M10	M12	M16	M16
	n1 h8	mm	12	14	17	21	21
Chuck open (3 jaws)	**R1**	mm	71	89	110	134	162
Chuck open HBL-D2 (2 jaws)	**R1**	mm	74	92	114	138.5	168

HB-C fixtures dimensions (available only in 3 jaw chuck version)

SMW-AUTOBLOK Type			HB-C 165	HB-C 210	HB-C 250	HB-C 315
	e2	mm	54	71	77	99
	f2	mm	4	4	4	4
	g2	mm	3	3	3	3
	l2	mm	38	44.4	54	63.5
	m2	mm	M10	M12	M16	M16
	n2 h8	mm	7.94	7.94	12.70	12.70
	o2H7	mm	12.68	12.68	19.03	19.03
Chuck open	**R1**	mm	89	110	134	162
Chuck open	**Rmax**	mm	62	77	94	109

PB-D

INCH SERRATION
2 or 3 jaws

PB-C

TONGUE & GROOVE
3 jaws

Stationary chuck, pneumatic Ø 130 - 315 mm

- Built-in cylinder
- 2 and 3 jaws

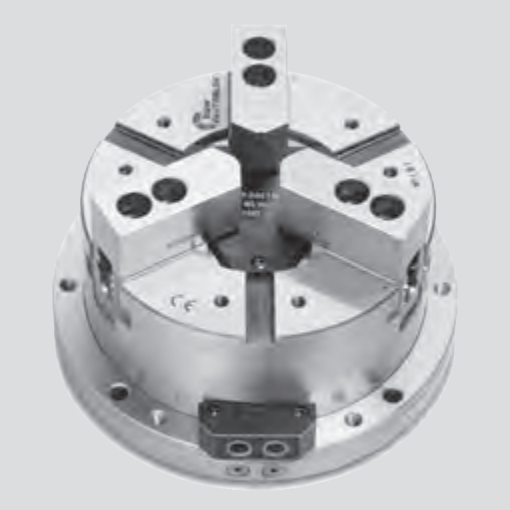

Application/customer benefits

- Self centering chuck used on milling machines, machining centers and special machines

PB-D: INCH SERRATED master jaws (1/16" x 90°)
PB-C: TONGUE & GROOVE master jaws (American standard)
PB-M: METRIC SERRATED master jaws (1.5 mm x 60°) **on request**

Technical features

- Stationary chuck consisting of a 2/3 jaw chuck with a built-in pneumatic cylinder
- Compact design
- Case hardened body to assure highest precision and long chuck life

Caution! Filtered and oiled operating air required

Standard equipment

Clamping unit
1 set of soft blank top jaws
(PB-C excluded)

Ordering example

Stationary chuck PB-C 250 (3 Jaws)
or
Stationary chuck PBL-D2 165 (2 Jaws)

Technical data

SMW-AUTOBLOK Type		PB-D 130	PB-D 165 PB-C 165	PB-D 210 PB-C 210	PB-D 250 PB-C 250	PB-D 315 PB-C 315
Radial jaw stroke	mm	3.2	3.6	4.4	5	6.3
Radial jaw stroke PBL-D2 (2 jaws)*	mm	6	6.8	8.4	9.7	12
Piston area	cm^2	82	143	236	358	548
Max. operating pressure	bar	7	7	7	7	7
Gripping force at 6 bar	kN	14	24	42	64	98
Gripping force at 6 bar PBL-D2 (2 jaws)*	kN	9	16	26	39	60
Weight (without top jaws)	kg	9	17	28	42	63

* The 2 jaw fixture is available with serrated master jaws (inch or metric) and long stroke only.

Option for the PB-D and PB-C chuck Safety unit that maintains a constant pressure inside the cylinder which maintains a steady clamping force even in case of a drop or lack of line pressure.

SAB
Safety unit with double non-return valve, Id. No. 27581620

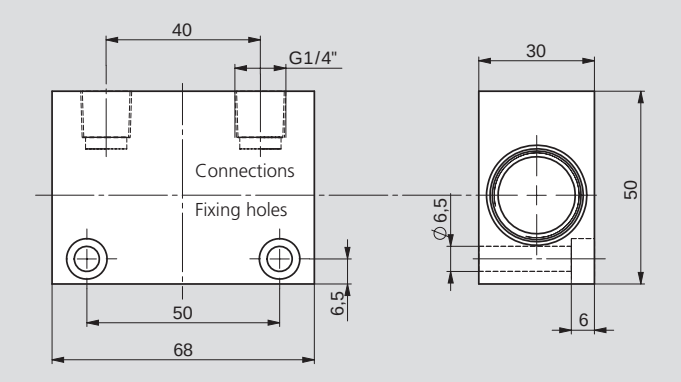

JAWS-CATALOG

Request or download: www.smw-autoblok.de

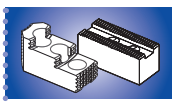

SMW-AUTOBLOK 396

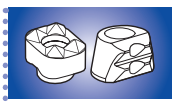

SMW-AUTOBLOK 400

Stationary chuck, pneumatic Ø 130 - 315 mm

- Built-in cylinder
- 2 and 3 jaws

PB-D

INCH SERRATION
2 or 3 jaws

PB-C

TONGUE & GROOVE
3 jaws

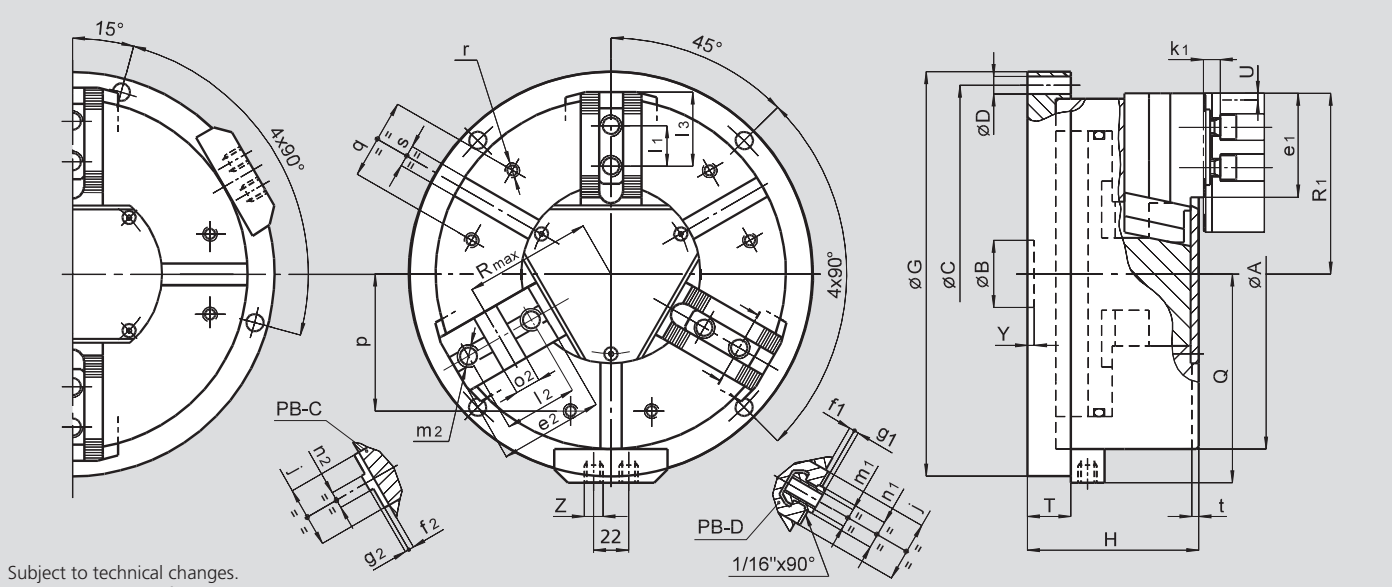

Subject to technical changes.
For more detailed information please ask our customer service.

Common dimensions

SMW-AUTOBLOK Type			PB-D 130	PB-D 165 PB-C 165	PB-D 210 PB-C 210	PB-D 250 PB-C 250	PB-D 315 PB-C 315
	A	mm	135	170	215	260	315
	B	mm	30	30	35	50	50
Fixing holes circle	**C**	mm	155	190	235	280	340
Fixing holes diameter	**D**	mm	9	11	11	13	13
	G	mm	175	210	255	300	360
	H	mm	89	100	117	127	141
	Q	mm	93	110	133	155	183
	T	mm	25	27	30	32	32
Radial jaw stroke (3 jaws)	**U**	mm	3.2	3.6	4.4	5	6.3
Radial jaw stroke PBL-D2 (2 jaws)	**U**	mm	6	6.8	8.4	9.7	12
	Y	mm	5	5	5	5	5
Pneumatic connections	**Z**	inch	R1/4"	R1/4"	R1/4"	R1/4"	R1/4"
	j	mm	26	30	36	45	45
	k1	mm	10	10	11	12	12
	p	mm	52	65	80	102	120
	q	mm	30	36	45	60	60
	r	mm	M6	M8	M8	M10	M10
	s H12	mm	12	16	16	16	16
	t	mm	5	5	5	5	5

PB-D and PBL-D2 fixtures dimensions

SMW-AUTOBLOK Type			PB-D 130	PB-D 165	PB-D 210	PB-D 250	PB-D 315
	e1	mm	37	48	60	77	99
	f1	mm	3	4	3	4	4
	g1	mm	2.5	2.5	2.5	3.5	3.5
	l1	mm	16	16.5	23	30	30
T-nut position min./max.	**l3**	mm	23/30	24/40	33/50	43/62	43/84
	m1	mm	M8	M10	M12	M16	M16
	n1 h8	mm	12	14	17	21	21
Chuck open (3 jaws)	**R1**	mm	71	89	110	134	162
Chuck open PBL-D2 (2 jaws)	**R1**	mm	74	92	114	138.5	168

PB-C fixtures dimensions (available in 3 jaw chuck version only)

SMW-AUTOBLOK Type			PB-C 130	PB-C 165	PB-C 210	PB-C 250	PB-C 315
	e2	mm	-	54	71	77	99
	f2	mm	-	4	4	4	4
	g2	mm	-	3	3	3	3
	l2	mm	-	38	44.4	54	63.5
	m2	mm	-	M10	M12	M16	M16
	n2 h8	mm	-	7.94	7.94	12.70	12.70
	o2 H7	mm	-	12.68	12.68	19.03	19.03
Chuck open	**R1**	mm	-	89	110	134	162
Chuck open	**Rmax**	mm	-	62	77	94	109

STP

INCH SERRATION
3 jaws

Stationary chuck, pneumatic Ø 125 - 280 mm

- **Built-in cylinder**
- **With through hole**

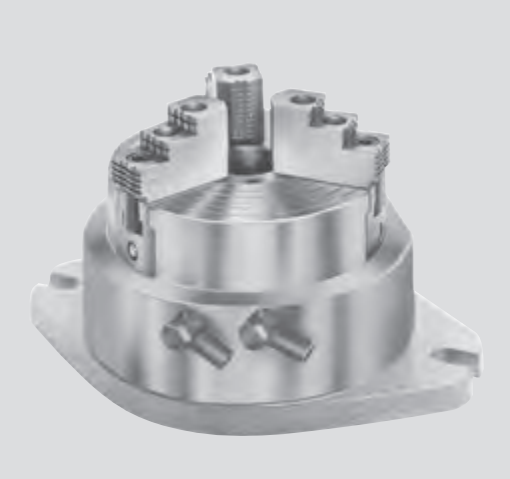

Application/customer benefits

- Self centering stationary chuck used on milling machines/machining centers/ special machines
- Low profile – large open center
- Easy installation on the machine

Technical features

- Stationary chuck consisting of a 3 jaw chuck with a built-in pneumatic cylinder
- Operating pressure from 2 to 10 bar

Caution! Filtered and oiled, operating air required

Standard equipment

Stationary chuck
1 set T-nuts with bolts
1 set of soft blank top jaws
2 elbow fittings G1/4"
(G1/8" on STP 125)

Ordering example

Stationary chuck STP 280 (3 Jaws)

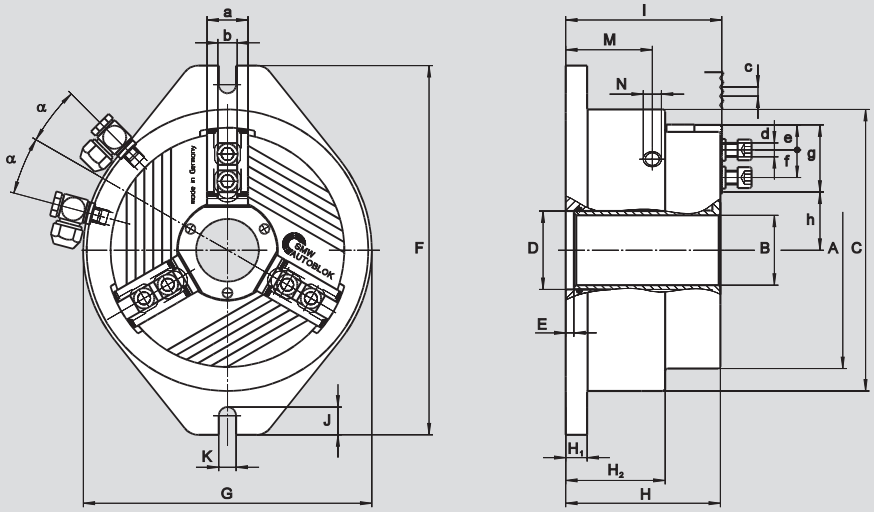

Subject to technical changes.
For more detailed information please ask our customer service.

Technical data

SMW-AUTOBLOK Type Id. No.			STP 125 013904	STP 160 013905	STP 240 053273	STP 280 052810
	A	mm	136	171	240	284
	B	mm	26	38	78	92
	C	mm	156	201	250	316
	D H6	mm	34	46	86	102
	E	mm	8	7.5	7	6
	F	mm	220	275	320	400
	G	mm	160	206	250	316
	H	mm	102.5	130	134	155.5
	H1	mm	14.5	19	18.5	23.5
	H2	mm	66	83	86	97.5
	I	mm	104	132	135.5	157
	J	mm	22	24	24	30
	K	mm	13	15	15	18
	M	mm	57	72	75	86
Pneumatic connections	**N**	inch	G 1/8"	G 1/4"	G 1/4"	G 1/4"
	a	mm	25	30	36	44
	b f7	mm	12	14	17	21
Serration	**c**	inch	1/16" x 90°	1/16" x 90°	1/16" x 90°	1/16" x 90°
Bolt ISO 4762 12.9	**d**	mm	M8 x 30	M10 x 35	M12 x 35	M16 x 40
Min.	**e**	mm	4	6	8	12
T-nuts distance min./max.	**f**	mm	17/25	17/31	22/41.5	25/51
Serration length	**g**	mm	40	50	59	75
Min./max.	**h**	mm	25.9/28.9	24.9/37	57.7/61.9	70/65
	α	deg.	15	15	15	7.5

Radial jaw stroke	mm	3	4.1	4.2	5
Operating pressure min./max.	bar	2/10	2/10	2/10	2/10
Piston area	cm^2	129	206	290	532
Gripping force at 6 bar	kN	20	35	60	95
Air consumption at 6 bar	l	1	2.4	5.5	6.6
Weight (without top jaws)	kg	19	21	40	56

STP

INCH SERRATION
3 jaws

MHB-D
Hardened reversible top jaws

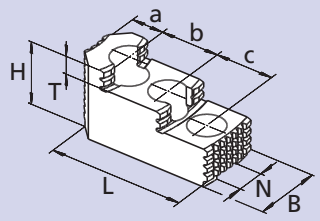

Chuck Type	STP 125	STP 160	STP 240	STP 280
Jaw type	MHB-D 125	MHB-D 160	MHB-D 200	MHB-D 251
Jaw Id. No. (set)	12081306	12081636	12082036	12083036
B	30	34	40	5
H	34	39	45	56
L	58	65	82	105
T	8.5	10	10.5	13.5
N	12	14	17	21
Serration	1/16" x 90°	1/16" x 90°	1/16" x 90°	1/16" x 90°
a	13	18	19	26
b	16	16	23	30
c	16	16	23	30
kg/set	0.6	0.9	1.7	2.85

AWB-D
Soft top jaws

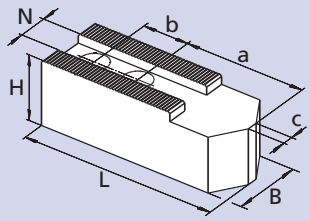

Chuck Type	STP 125	STP 160	STP 240	STP 280
Jaw type	AWB-D 125	AWB-D 165	AWB-D 200	AWB-D 250
Jaw Id. No. (set)	12071300*	035954	081616	081618
B	30	40	40	50
H	30	40	40	50
L	60	80	90	120
N	12	14	17	21
Serration	1/16" x 90°	1/16" x 90°	1/16" x 90°	1/16" x 90°
a	29	43	53	70
b	16	22	22	28
kg/set	0.9	2.0	2.7	5.1

* Id. No. is per piece. 1 set = 3 pieces.

NST
T-nuts

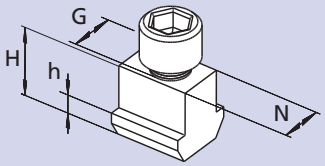

Chuck Type	STP 125	STP 160	STP 240	STP 280
T-nut type	NST 12	NST 14	NST 17-4	NST 21-5
T-nut Id. No.	089810*	013863*	013864*	033429*
N	12	14	17	21
H	21.5	26.5	26.5	30
h	7.5	9.5	9.5	11
G	M8	M10	M12	M16
Bolt ISO 4762 12.9	M8 x 30	M10 x 35	M12 x 35	M16 x 40
Tighten torque	30	50	70	150

* Id. No. is per piece. 1 set = 6 pieces.

JAWS-CATALOG

Request or download: www.smw-autoblok.de

M2-PB

Multiple fixture
with 2 chucks

Multiple chucks on fixture, pneumatic
Ø 130 - 315 mm

■ 2 or 3 jaws (PB-D/PB-M)
■ 3 jaws (PB-C)

Application/customer benefits

- For milling machines/machining centers to clamp and machine multiple pieces

M2-PB: Multiple fixture with 2 chucks type PB-D, PB-C oder PB-M

Technical features

(more features on chucks see general catalog page 378)

- The basic model needs separate circuits to operate the chucks singularly.
  1st option: SAB safety unit with non-return valve for every chuck
  2nd option: single non-return valve to operate all chucks simultaneously, with coupling unit to repressurize the fixtures after the storage of the pallets.
  3rd option: every chuck can be equipped with a spring loaded clamping unit (internal or external clamping), to hold the workpieces during the pallet transfer.

Standard equipment

Multiple chuck on fixture
1 set of soft blank top jaws and
1 set T-nuts with bolts
(PB-C excluded)

Ordering example

Multiple chuck on fixture M2-PBC 250
(3 jaws)

Technical data

SMW-AUTOBLOK Type		M2-PB 130	M2-PB 165	M2-PB 210	M2-PB 250	M2-PB 315
Chucks radial jaw stroke	mm	3.2	3.6	4.4	5	6.3
Chucks radial jaw stroke PBL-D2 (2 jaws)*	mm	6	6.8	8.4	9.7	12
Actuating cylinder piston area	cm^2	82	143	236	358	548
Max. operating pressure	bar	7	7	7	7	7
Chucks gripping force at 6 bar	kN	14	24	42	64	98
Chucks gripping force at 6 bar PBL-D2 (2 jaws)*	kN	9	16	26	39	60
Weight (without top jaws)	kg	29.5	49	83	121	172

* The 2 jaw fixture is available with serrated master jaws (inch or metric) and long stroke only

Option for the M2-PB fixture
Safety unit that maintains a constant pressure inside the cylinder which maintains a steady clamping force even in case of a drop or lack of line pressure.

SAB
Safety unit with double non-return valve
Id. No. 27581620

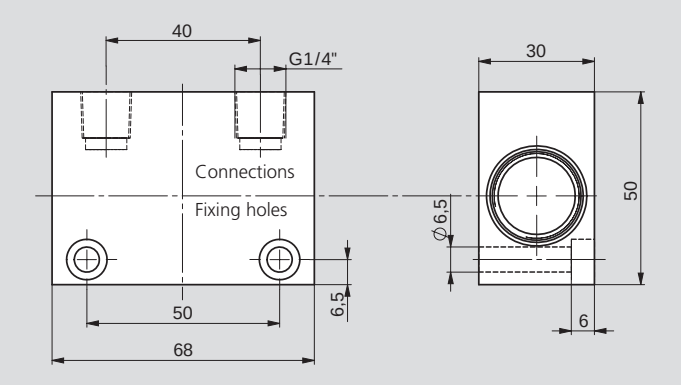

JAWS-CATALOG

Request or download:
www.smw-autoblok.de

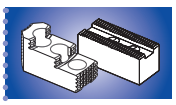

SMW-AUTOBLOK 396

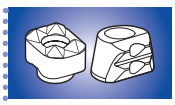

SMW-AUTOBLOK 400

Multiple chucks on fixture, pneumatic Ø 130 - 315 mm

- 2 or 3 jaws (PB-D/PB-M)
- 3 jaws (PB-C)

M2-PB

Multiple fixture with 2 chucks

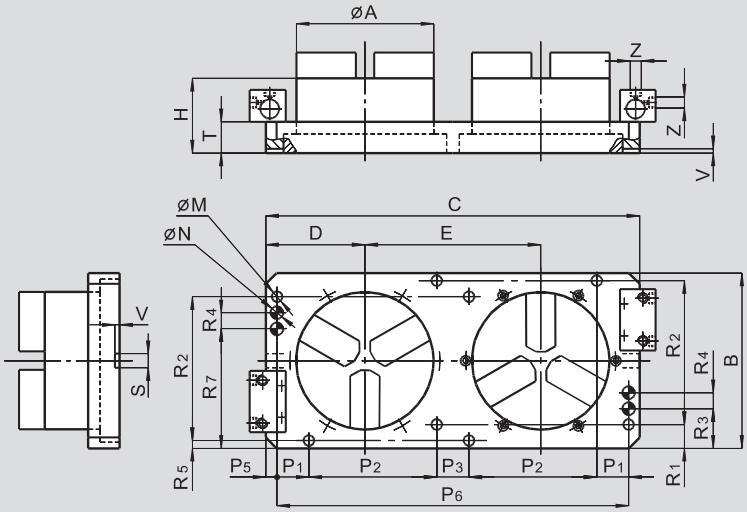

Subject to technical changes.
For more detailed information please ask our customer service.

M2-PB dimensions

SMW-AUTOBLOK Type			M2-PB 130	M2-PB 165	M2-PB 210	M2-PB 250	M2-PB 315
Chuck diameter	**A**	mm	135	170	215	260	315
	B	mm	198	224	274	324	374
	C	mm	400	460	585	660	780
	D	mm	107.5	131	155	175	205
	E	mm	185	223	275	310	370
	H	mm	89	100	117	127	141
Fixing holes diameter	**M**	mm	17	17	17	17	17
Reference pin holes	**N** H8	mm	20	20	20	20	20
	P1	mm	-	50	50	50	50
	P2	mm	150	150	200	250	300
	P3	mm	50	50	50	-	-
	P5	mm	25	17.5	17.5	30	40
	P6	mm	350	460	550	600	700
	R1	mm	24	37	37	37	37
	R2	mm	150	175	225	275	325
	R3	mm	24	62	62	62	62
	R4	mm	-	25	25	25	25
	R5	mm	24	12	12	12	12
	R7	mm	174	137	187	237	287
	S	mm	14	18	18	18	18
	T	mm	39	44	49	54	54
	V	mm	6	6	6	6	6
Pneumatic connections	**Z**	inch	R1/4"	R1/4"	R1/4"	R1/4"	R1/4"

PBI-D

INCH SERRATION
2 or 3 jaws

PBI-C

TONGUE & GROOVE
3 jaws

Pneumatic chuck for indexing tables Ø 165 - 315 mm

- Built-in cylinder
- 2 and 3 jaws

Application/customer benefits

- Self centering rotating chuck with a pneumatic manifold used on indexing tables, not designed for constant rotation on turning machines.

PBI-D: INCH SERRATED master jaws (1/16" x 90°)
PBI-C: TONGUE & GROOVE master jaws
PBI-M: METRIC SERRATED master jaws (1.5 mm x 60°) **on request**

Technical features

- 2/3 jaw chuck with a built-in pneumatic cylinder
- Manifold for air supply
- Case hardened body to assure highest precision and long chuck life

Important! Due to the friction between fixed manifold and rotating central body, the indexing table must provide a higher rotation torque than the one shown in the schedule below!

Standard equipment

Chuck unit
1 set of soft blank top jaws
(PBI-C excluded)
1 set T-nuts with bolts
(PBI-C excluded)

Ordering example

3-jaw chuck PBI-C 250
or
2-jaw chuck PBI-D 165

Technical data

SMW-AUTOBLOK Type		PBI-D 165 PBI-C 165	PBI-D 210 PBI-C 210	PBI-D 250 PBI-C 250	PBI-D 315 PBI-C 315
Radial jaw stroke	mm	3.6	4.4	5	6.3
Radial jaw stroke PBIL-D2 (2 jaws)*	mm	6.8	8.4	9.7	12
Piston area	cm²	143	236	358	548
Max. operating pressure	bar	7	7	7	7
Gripping force at 6 bar	kN	24	42	64	98
Gripping force at 6 bar PBIL-D2 (2 jaws)*	kN	16	26	39	60
Torque Md	Nm	40	60	85	120
Weight (without top jaws)	kg	23	38	56	82

* The 2 jaw fixture is available with serrated master jaws (inch or metric) and long stroke only.

JAWS-CATALOG

Request or download: www.smw-autoblok.de

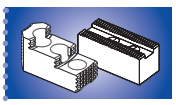
SMW-AUTOBLOK 396

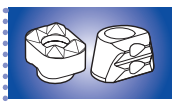
SMW-AUTOBLOK 400

Pneumatic chuck for indexing tables Ø 165 - 315 mm

- Built-in cylinder
- 2 and 3 jaws

PBI-D

INCH SERRATION
2 or 3 jaws

PBI-C

TONGUE & GROOVE
3 jaws

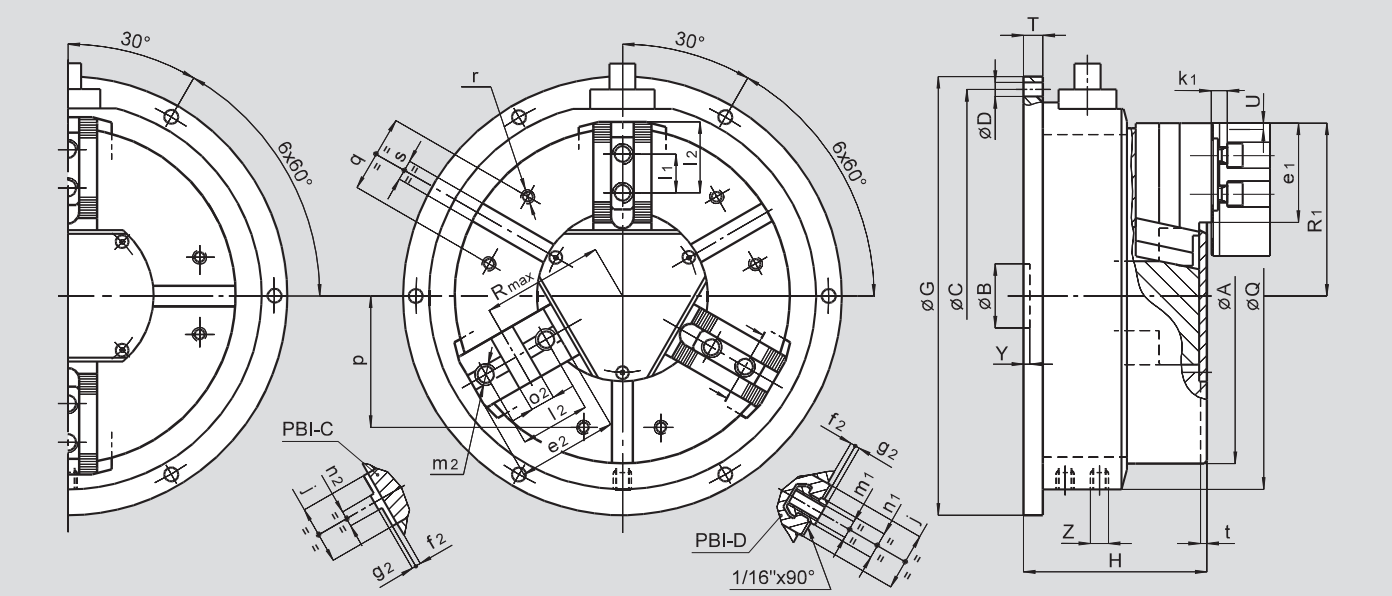

Subject to technical changes.
For more detailed information please ask our customer service.

Common dimensions

SMW-AUTOBLOK Type			PBI-D 165 PBI-C 165	PBI-D 210 PBI-C 210	PBI-D 250 PBI-C 250	PBI-D 315 PBI-C 315
	A	mm	170	215	260	315
	B	mm	30	35	50	50
Fixing holes circle	**C**	mm	225	280	320	390
Fixing holes diameter	**D**	mm	9	11	11	13
	G	mm	240	300	340	415
	H	mm	114	132	140	145
	Q	mm	210	260	300	365
	T	mm	10	12	14	14
Radial jaw stroke (3 jaws)	**U**	mm	3.6	4.4	5	6.3
Radial jaw stroke PBIL-D2 (2 jaws)	**U**	mm	6.8	8.4	9.7	12
	Y	mm	5	5	5	5
Pneumatic connections	**Z**	inch	R1/4"	R1/4"	R1/4"	R1/4"
	j	mm	30	36	45	45
	k1	mm	10	11	12	12
	p	mm	65	80	102	120
	q	mm	36	45	60	60
	r	mm	M8	M8	M10	M10
	s H12	mm	16	16	16	16
	t	mm	5	5	5	5

PBI-D and PBIL-D2 fixtures dimensions

SMW-AUTOBLOK Type			PBI-D 165	PBI-D 210	PBI-D 250	PBI-D 315
	e1	mm	48	60	77	99
	f1	mm	4	3	4	4
	g1	mm	2.5	2.5	3.5	3.5
	l1	mm	16.5	23	30	30
T-nut position min./max.	**l3**	mm	24/40	33/50	43/62	43/84
	m1	mm	M10	M12	M16	M16
	n1 h8	mm	14	17	21	21
Chuck open (3 jaws)	**R1**	mm	89	110	134	162
Chuck open PBIL-D2 (2 jaws)	**R1**	mm	92	114	138.5	168

PBI-C fixtures dimensions (available only in 3 jaw chuck version)

SMW-AUTOBLOK Type			PBI-C 165	PBI-C 210	PBI-C 250	PBI-C 315
	e2	mm	54	71	77	99
	f2	mm	4	4	4	4
	g2	mm	3	3	3	3
	l2	mm	38	44.4	54	63.5
	m2	mm	M10	M12	M16	M16
	n2 h8	mm	7.94	7.94	12.70	12.70
	o2 H7	mm	12.68	12.68	19.03	19.03
Chuck open	**R1**	mm	89	110	134	162
Chuck open	**Rmax**	mm	62	77	94	109

Chuck switching system ■ Chuck flanges ■ Top jaws,T-nuts Grippers ■ Gripping force meter ■ Grease ■ Accessories

Page 388

CCS

Chuck switching system

Manual chuck switching system

- Highest repeatability and change-over accuracy
- Automatic coupling of chuck in a single actuation
- Large through hole
- Optical control for the locking status

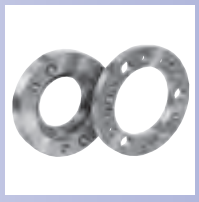

Page 394

Chuck flanges

DIN 55026/ISO-A 702/1

Mounting flanges on short taper spindle noses

- Direct and indirect mounting
- Reduction and increase mounting

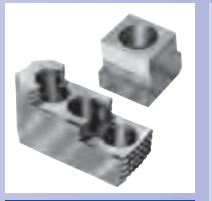

Page 396

Top jaws, T-nuts

- Hard top jaws
- Soft top jaws
- T-nuts

JAWS-CATALOG

Request or download: www.smw-autoblok.de

Jaw Finder

free application to search for jaws very quick and easy

www.smw-autoblok.de

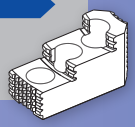

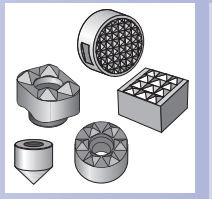

Page 400

Grippers UGE, FGH +HDS Clamping tips MGH

- Grippers, special steel hardened
- Grippers, carbide
- Clamping tips

Page 403

Precision grippers G14 + G25 - G15 + G30

- Controlled penetration
- G14 light duty pull down
  G25 heavy duty pull down
- G15 light duty high torque
  G30 heavy duty high torque

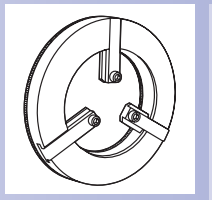

Page 406

ADVL

Light duty version

ADVS

Heavy duty version

Bore fixture

- To bore jaws on the chuck

Page 407

Boring rings ADS

- For boring of soft top jaws on chucks

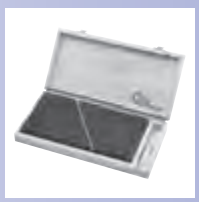

Page 407

Dress and cleaning plate RPS

For dressing and cleaning of top jaw serrations

- 2 different serrations per plate (upper and lower side)

Page 408

Gripping force tester GFT®-X 4.0

Multi Device Tablet with expert apps

- Wireless handheld with rechargeable battery
- Dynamic or static gripping force measuring
- Speed measuring
- Display Software

Page 411

Grease K05®

- For manual and power chucks

Grease K67®

- Special grease for sealed chucks included in proofline® series

Grease gun

- Important for safe operation an maintenance

CCS

CHUCK SWITCHING SYSTEM

Manual chuck switching system

- Highest repeatability and change-over accuracy
- Automatic coupling of chuck in a single actuation
- Large through hole
- Optical control for the locking status

Typical application:
CCS with KNCS-2G chuck

Application/customers benefits

- Quick change-over of workholding on CNC machines
- Less down time and high changing accuracy
- Can be adapted to any spindle and any chuck

Technical features

- Highest repeatability and change-over accuracy
- Automatic coupling of chuck in a single actuation
- Large through hole
- Optical control for the locking status
- Protected against contamination
- Automatic „push off" of the adapter flange when opening the CCS

Standard equipment

Chuck switching system
Coupling sleeve
Key
Bayonet draw tube blank

Ordering example

CCS-A06-A06, Id. No. 054600 or
CCS-Z170-A06, Id. No. 055015

Ordering review

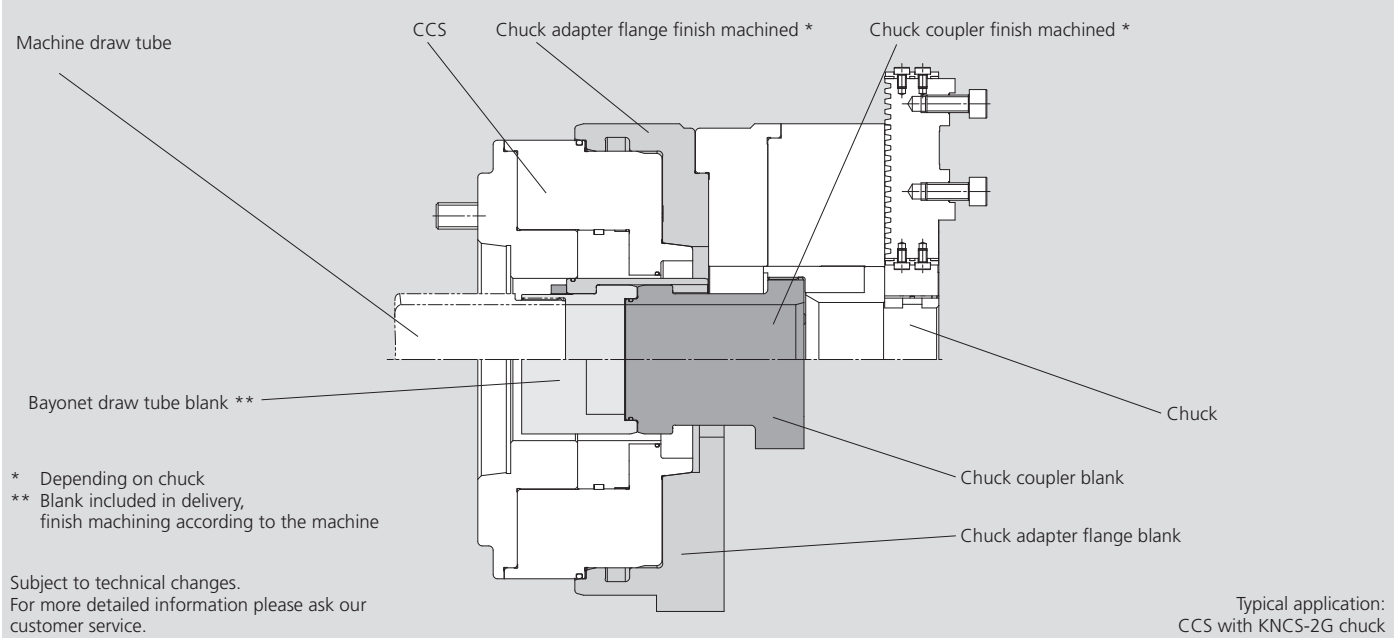

* Depending on chuck
** Blank included in delivery, finish machining according to the machine

Subject to technical changes.
For more detailed information please ask our customer service.

Typical application:
CCS with KNCS-2G chuck

SMW-AUTOBLOK Type		CCS		CCS		CCS	
Mounting		A06-A06	Z170-A06	A08-A08	Z220-A08	A11-A11	Z300-A11
Chuck switching system CCS HSP (open center)	Id. No.	054600	055015	054840	055016	054960	055017
Chuck switching system CCS VSP (closed center)	Id. No.	055010	055018	055011	055019	055012	055020
Chuck adapter flange blank	Id. No.	054617		054860		054980	
Chuck adapter flange Z140	Id. No.	on request		on request		on request	
Chuck adapter flange Z170	Id. No.	054622		055086		-	
Chuck adapter flange Z220	Id. No.	055022		054864		055087	
Chuck adapter flange Z300	Id. No.	-		055023		054984	
Chuck adapter flange Z380	Id. No.	-		-		055024	
Chuck coupler blank	Id. No.	054616		054861		054981	
Chuck coupler finish machined KNCS-N-210-Z170	Id. No.	054621		-		-	
Chuck coupler finish machined KNCS-N-260-Z170	Id. No.	055082		-		-	
Chuck coupler finish machined KNCS-N-260-Z220	Id. No.	055160		054877		-	
Chuck coupler finish machined KNCS-N-325-Z220	Id. No.	-		054863		-	
Chuck coupler finish machined KNCS-N-325-Z300	Id. No.	-		055162		054983	
Chuck coupler finish machined KNCS-N-400-Z300	Id. No.	-		-		055165	
Chuck coupler finish machined KNCS-N-400-Z380	Id. No.	-		-		055166	
Chuck coupler finish machined KNCS-N-500-Z300	Id. No.	-		-		055167	
Chuck coupler finish machined KNCS-N-500-Z380	Id. No.	-		-		055168	
Chuck coupler finish machined BH-D-210	Id. No.	054882		-		-	
Chuck coupler finish machined BH-D-250	Id. No.	-		054879		-	

Installation onto machines with open center draw tube

The described design is for draw tubes with O.D. thread only!
For draw tubes with I.D. thread please contact SMW-AUTOBLOK!

Checking of spindle and draw tube (customer side):
In order to check the existing draw tube dimensions, the cylinder must be in the complete forward end position (dead stop in the cylinder)!

Screw the draw tube firmly into the cylinder and secure it against rotation.
Checking of the dimensions for usability:
All surfaces to be clean and free of burrs.
Carry out several measurements at different and opposed positions.
If the draw tube dimensions are within the dimensions (see table below) the existing draw tube can be used.
If the draw tube dimensions are not within the dimensions (see table below) a new draw tube has to be used!

Spindle with short taper mounting

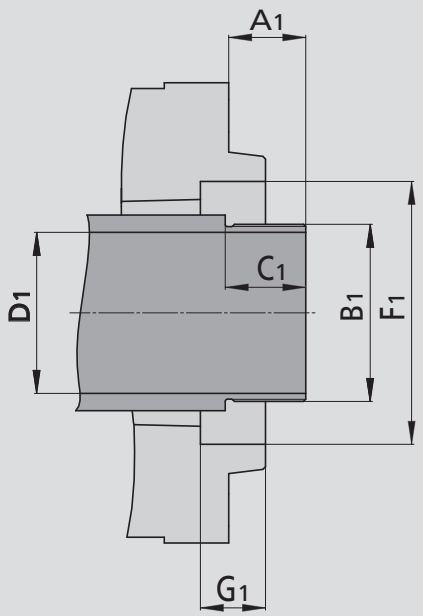

Spindle with cylindrical mounting

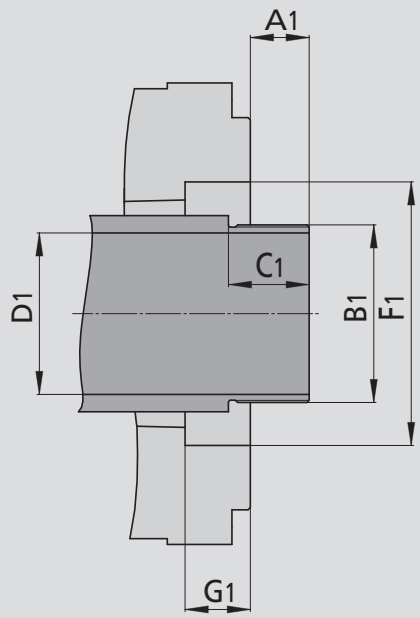

Spindle with short taper mounting			
Check dimensions A-A	**CCS A06-A06**	**CCS A08-A08**	**CCS A11-A11**
A1 min./max.	25 / 50.5	25 / 53	28 / 69
B1 max.	M56x1.5	M77x1.5	M100x1.5
C1 min.	18	20	22
D1 max. (Ø)	50	70	92
F1 min. (Ø)	70	90	115
G1 min. (depth)	8	10	10

Spindle with cylindrical mounting			
Check dimensions Z-A	**CCS Z170-A06**	**CCS Z220-A08**	**CCS Z300-A11**
A1 min./max.	19 / 44.5	19 / 47	22 / 63
B1 max.	M56x1.5	M77x1.5	M100x1.5
C1 min.	18	20	22
D1 max. (Ø)	50	70	92
F1 min. (Ø)	70	90	-
G1 min. (depth)	8	10	-

CCS

CHUCK SWITCHING SYSTEM
for open center (Type HSP)

Manual chuck switching system (CCS-HSP)

- Highest repeatability and change-over accuracy
- Automatic coupling of chuck in a single actuation
- Large through hole
- Optical control for the locking status

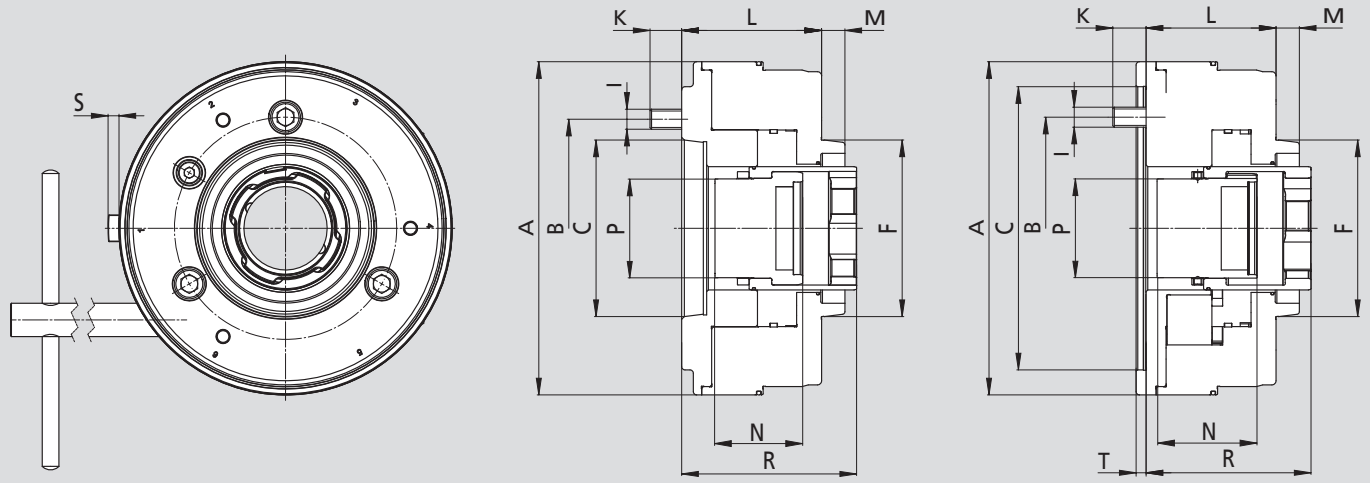

Subject to technical changes.
For more detailed information please ask our customer service.

SMW-AUTOBLOK Type open center (HSP) *		CCS-A06-A06	CCS-Z170-A06	CCS-A08-A08	CCS-Z220-A08	CCS-A11-A11	CCS-Z300-A11
Mounting	**Size**	**A06**	**Z170**	**A08**	**Z220**	**A11**	**Z300**
	A	200	200	250	250	300	315
	B	133.4	133.4	171.4	171.4	235	235
Mounting spindle side	C	A06	Z170	A08	Z220	A11	Z300
Mounting chuck side	F	A06	A06	A08	A08	A11	A11
	I	M12	M12	M16	M16	M20	M20
	K	19	20	22.5	23.5	30.5	31.5
	L	84	78	87.5	81.5	100.5	94.5
	M	14	14	16	16	18	18
	N	65	65	70	70	85	85
	P	59.3	59.3	79.3	79.3	105.3	105.3
Max. / min.	R	105 / 79.5	99 / 73.5	111 / 83	105 / 77	127 / 85	121 / 79
Max. axial stroke CCS		25.5	25.5	28	28	42	42
Stroke of indicator slide / optical control for the locking status	S	~ 6.5	~ 6.5	~ 6.5	~ 6.5	~ 6.8	~ 6.8
	T	-	6	-	6	-	6
Moment of inertia	kg·m²	0.084	0.085	0.217	0.223	0.581	0.585
Weight without flange and chuck	kg	15.9	16.0	26.2	26.5	45.1	45.9
Max. possible through hole Ø	mm	50	50	70	70	92	92
Max. chuck size **	Ø	260	260	325	325	500	500
Torque for wrench Md at CCS	Nm	22	22	40	40	55	55
Max. speed	r.p.m.	6300	6300	5000	5000	4700	4700

** Above values refere to SMW-AUTOBLOK Standard-Chucks. For other chucks and for special application a seperate approval from SMW-AUTOBLOK is necessary! The same applies for special machining processes or when clamping heavy or long workpieces!

Technical data for outside clamping (pull)							
Actuating force F max. (axial force of the cylinder)	kN	53	53	95	95	120	120

Technical data for inside clamping (push)							
Actuating force F max. (axial force of the cylinder)	kN	35	35	60	60	80	80

* The **codes** on the **description of the type** have the following meaning:

Short taper mounting chuck
Short taper mounting spindle
SMW-AUTOBLOK Type

CCS-A06-A06

SMW-AUTOBLOK Type
Center mounting spindle
Short taper mounting chuck

CCS-Z170-A06

Manual chuck switching system (CCS-VSP)

- Highest repeatability and change-over accuracy
- Automatic coupling of chuck in a single actuation
- Optical control for the locking status

CCS

CHUCK SWITCHING SYSTEM
for closed center (Type VSP)

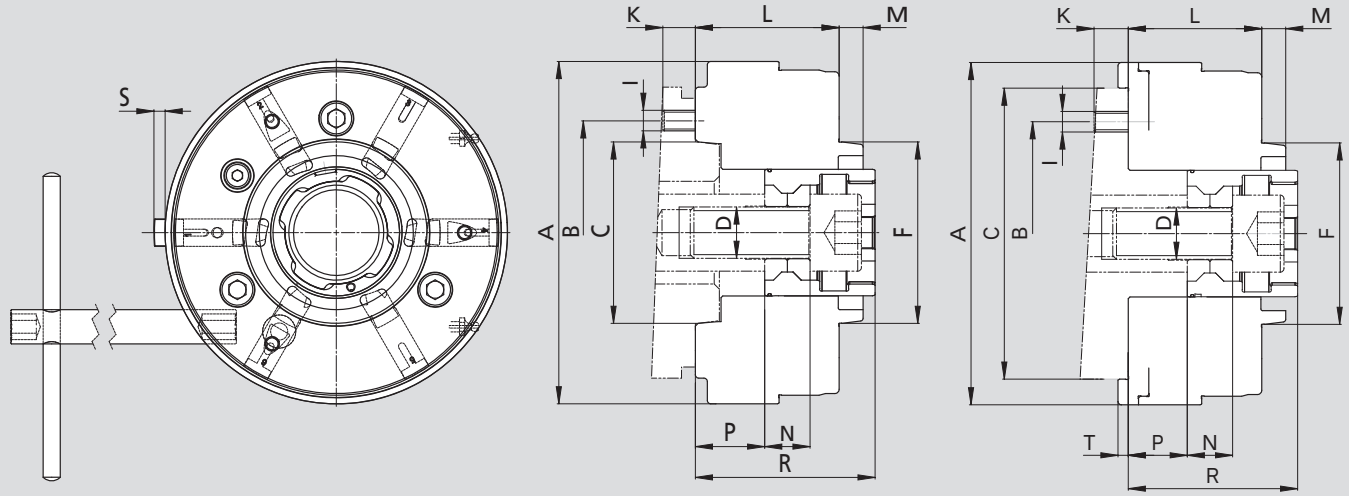

Subject to technical changes.
For more detailed information please ask our customer service.

SMW-AUTOBLOK Type closed center (VSP) *		CCS-A06-A06	CCS-Z170-A06	CCS-A08-A08	CCS-Z220-A08	CCS-A11-A11	CCS-Z300-A11
Mounting	**Size**	**A06**	**Z170**	**A08**	**Z220**	**A11**	**Z300**
	A	200	200	250	250	300	315
	B	133.4	133.4	171.4	171.4	235	235
Mounting spindle side	C	A06	Z170	A08	Z220	A11	Z300
Draw bar thread max.	D	M30	M30	M36	M36	M42	M42
Mounting chuck side	F	A06	A06	A08	A08	A11	A11
	I	M12	M12	M16	M16	M20	M20
	K	19	20	22.5	23.5	30.5	31.5
	L	84	78	87.5	81.5	100.5	94.5
	M	14	14	16	16	18	18
	N	26.5	26.5	24.35	24.35	24.35	24.35
Max. (draw bar)	P	40.5	34.5	45	39	61	55
Max. / min.	R	105 / 79.5	99 / 73.5	111 / 83	105 / 77	127 / 85	121 / 79
Max. axial stroke CCS		25.5	25.5	28	28	42	42
Stroke of indicator slide / optical control for the locking status	S	~ 6.5	~ 6.5	~ 6.5	~ 6.5	~ 6.8	~ 6.8
	T	-	6	-	6	-	6
Moment of inertia	kg·m²	0.085	0.086	0.240	0.260	0.600	0.620
Weight without flange and chuck	kg	17.1	17.3	28.3	28.6	48.9	49.8
Max. chuck size **	Ø	260	260	400	400	500	500
Torque for wrench Md at CCS	Nm	22	22	40	40	55	55
Max. speed	r.p.m.	6300	6300	5000	5000	4700	4700

** Above values refere to SMW-AUTOBLOK Standard-Chucks.
For other chucks and for special application a seperate approval from SMW-AUTOBLOK is necessary!

Technical data for outside clamping (pull)							
Actuating force F max. (axial force of the cylinder)	kN	53	53	95	95	120	120

Technical data for inside clamping (push)							
Actuating force F max. (axial force of the cylinder)	kN	35	35	60	60	80	80

* The **codes** on the **description of the type** have the following meaning:

Short taper mounting chuck
Short taper mounting spindle
SMW-AUTOBLOK Type

CCS-A06-A06

SMW-AUTOBLOK Type
Center mounting spindle
Short taper mounting chuck

CCS-Z170-A06

Technical data chuck adapter flange finish blank

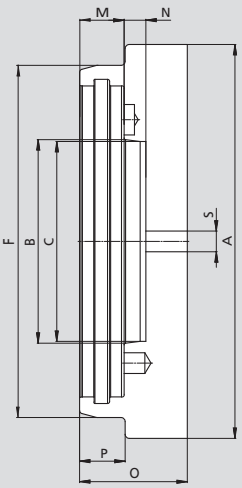

Subject to technical changes.
For more detailed information please ask our customer service.

SMW-AUTOBLOK Type		CCS-A06-A06 CCS-Z170-A06	CCS-A08-A08 CCS-Z220-A08	CCS-A11-A11 CCS-Z300-A11
chuck adapter flange blank		054617	054860	054980
A	Ø	220.3	300.3	380.3
B	Ø	106.375 (A06)	139.719 (A08)	196.869 (A11)
C	Ø	103	136	193
F	Ø	215	280	340
M		40	40.75	43
N		16.5	19	21
O		75	80	104
P		41	42	44
S	Ø	20	20	20

Technical data chuck adapter flange finish machined

Dimension for:
054622
054864
054984

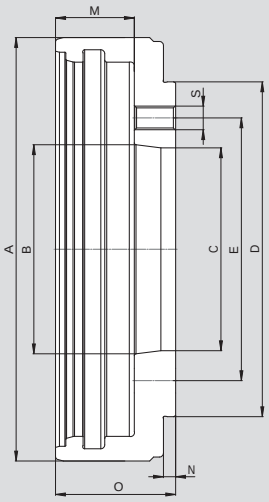

Dimension for:
055022
055023
055024

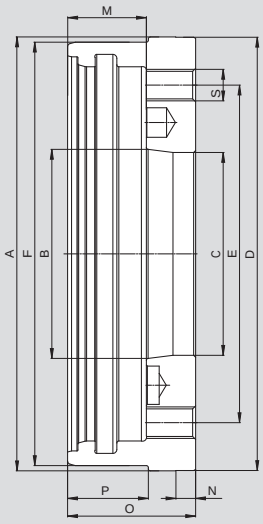

Subject to technical changes.
For more detailed information please ask our customer service.

SMW-AUTOBLOK Type		CCS-A06-A06 CCS-Z170-A06	CCS-A06-A06 CCS-Z170-A06	CCS-A08-A08 CCS-Z220-A08	CCS-A08-A08 CCS-Z220-A08	CCS-A11-A11 CCS-Z300-A11	CCS-A11-A11 CCS-Z300-A11
Type chuck adapter flange *		A06-Z170	A06-Z220	A08-Z220	A08-Z300	A11-Z300	A11-Z380
Id. No.		054622	055022	054864	055023	054984	055024
A	Ø	215	220.3	280	300.3	340	380.3
B	Ø	106.375 (A06)	106.375 (A06)	139.719 (A08)	139.719 (A08)	196.869 (A11)	196.869 (A11)
C	Ø	103	103	136	136	193	193
D	Ø	170	220	220	300	300	380
E	Ø	133.4	171.4	171.4	235	235	235
F	Ø	-	215	-	280	-	340
M		40	40	40.75	40.75	43	43
N		6.2	10	6.2	12.5	8.2	15
O		61	65	68.25	71.75	75	97
P		-	41	-	42	-	44
S (Thread)		M12	M16	M16	M20	M20	M24
S (division / number)		15° / 22	15° / 24	15° / 19	15° / 24	15° / 22	15° / 24

* The **codes** on the **description of the chuck adapter flange type** have the following meaning:

Short taper mounting CCS

Center mounting chuck

A06-Z170

Technical data chuck coupler blank

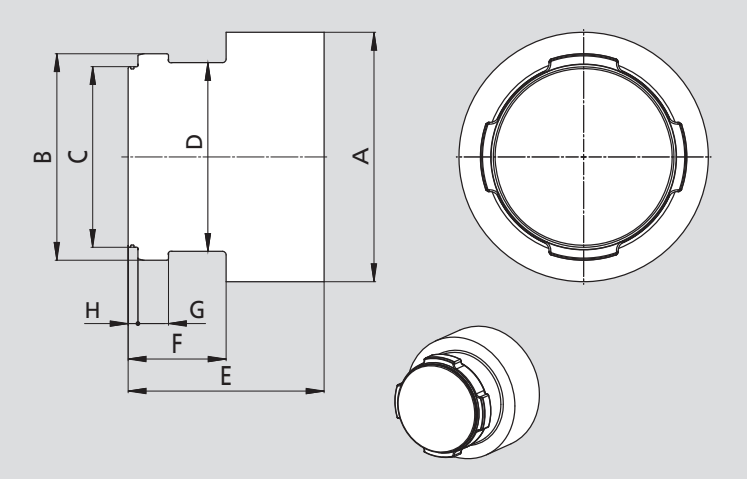

Subject to technical changes.
For more detailed information please ask our customer service.

SMW-AUTOBLOK Type		CCS-A06-A06 CCS-Z170-A06	CCS-A08-A08 CCS-Z220-A08	CCS-A11-A11 CCS-Z300-A11
Chuck coupler blank		054616	054861	054981
A	Ø	103	135	186
B	Ø	67.9	88.9	115.9
C	Ø	55.4	75.4	101.4
D	Ø	60	80	105.9
E		94	105	144
F		39.5	45	55
G		16	17.15	17.15
H		5.5	5.5	5.5

Technical data chuck coupler finish machined

Dimension for CCS + KNCS-N

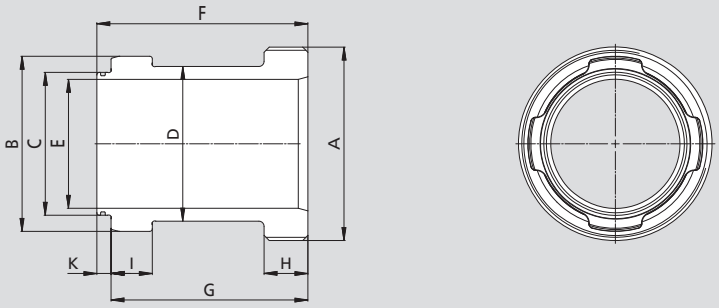

Dimension for CCS + BH-D

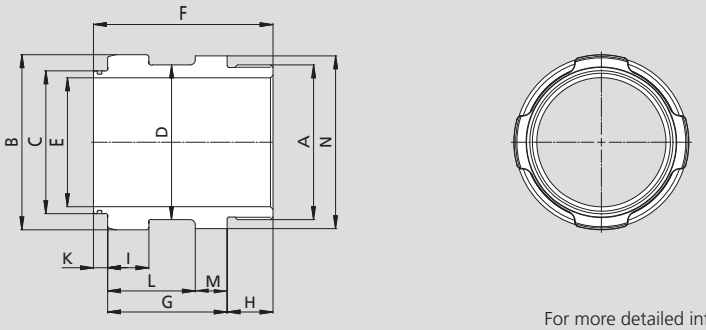

Subject to technical changes.
For more detailed information please ask our customer service.

SMW-AUTOBLOK Type		CCS-A06-A06 CCS-Z170-A06	CCS-A06-A06 CCS-Z170-A06	CCS-A06-A06 CCS-Z170-A06		CCS-A08-A08 CCS-Z220-A08	CCS-A08-A08 CCS-Z220-A08	CCS-A08-A08 CCS-Z220-A08		CCS-A11-A11 CCS-Z300-A11	CCS-A11-A11 CCS-Z300-A11		CCS-A11-A11 CCS-Z300-A11	
for chuck		KNCS-N-210	BH-D-210	KNCS-N-260		BH-D-250	KNCS-N-260	KNCS-N-325		KNCS-N-325	KNCS-N-400		KNCS-N-500	
Mounting		Z170	Z170	Z170	Z220	Z220	Z220	Z220	Z300	Z300	Z300	Z380	Z300	Z380
Chuck coupler		054621	054882	055082	055160	054879	054877	054863	055162	054983	055165	055166	055167	055168
A	Ø	M75x2.0	M60x1.5	M102x2.0		M72x1.5	M102x2.0	M132x2.0		M132x2.0	M160x2.0		M185x2.0	
B	Ø	67.9	67.9	67.9		88.9	88.9	88.9		115.9	115.9		115.9	
C	Ø	55.4	55.4	55.4		75.4	75.4	75.4		101.4	101.4		101.4	
D	Ø	60	60	60		80	80	80		105.9	105.9		105.9	
E	Ø	50	50	50		66	70	70		92	92		92	
F		81.35	69.35	88.1	92.1	83	96	97.85	101.25	99.6	103.2	125.2	116.2	138.2
G		75.85	48.85	82.6	86.6	60.5	90.5	92.35	95.75	94.1	97.7	119.7	110.7	132.7
H		16.5	15	22.5		17	22.5	24.5		24.5	24.5		27.5	
I		16	16	16		17.15	17.15	17.15		17.15	17.15		17.15	
K		5.5	5.5	5.5		5.5	5.5	5.5		5.5	5.5		5.5	
L		-	34	-		40.5	-	-		-	-		-	
M		-	14.85	-		20	-	-		-	-		-	
N	Ø	-	88	-		120	-	-		-	-		-	

Chuck flanges

DIN 55026 / ISO-A 702/1

Mounting flanges on short taper spindle noses

- Direct and indirect mounting
- Reduction and increase mounting

Application/customer benefits

- Chuck flanges for short taper mount spindles (DIN 55026/ISO-A 702/1)
- Easy installation of chucks on the machine spindle

Flange FF 1 = Direct mounting
Flange FF 2 = Reduction of taper
Flange FF 3 = Increase of taper

Technical data

- Case hardened flanges (up to Ø 220)
- High precision grinding of the taper and all reference dimensions

Standard equipment

Fixing bolts of the indirect mounting flange on the spindle nose

Ordering example

Direct flange FF 1 A6 Id. No. 24162000
or
Reduction flange FF 2 A5 Id. No. 24152000

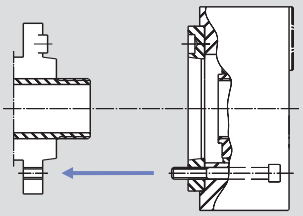

- **Flange FF 1 - direct mounting**
  Flange mounted onto the chuck.
  The chuck is directly mounted onto the spindle nose.

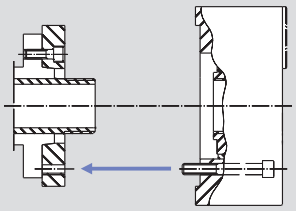

- **Flange FF 2 - reduction mounting**
  Used when the spindle nose is smaller than the standard one on the chuck.
  The flange is mounted onto the spindle prior to the chuck.

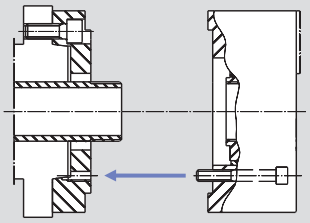

- **Flange FF 3 - increase mounting**
  Used when the spindle nose is bigger than the standard one on the chuck.
  The flange is mounted onto the spindle prior to the chuck.

The easy way to adapt your SMW-AUTOBLOK chuck to your machine spindle

	Chuck models											Flange FF 1		Flange FF 2				Flange FF 3			
Chuck Ø	AN-, AL-, FRC (1) AP-, NT-, FRS(1)	APL-, NTL-	IN-, IL-, IR-, PTF	2CL-, RAN	BH-, BP-, BB-,	GSA	BH-FC, TPT-	KNCS-, HFK-N	TSF-, TSR-, TX-, TE-	TSB-, TSB-CP	IEP-	Spindle nose	Flange Id. number	Spindle nose	Flange Id. number	Spindle nose	Flange Id. number	Spindle nose	Flange Id. number	Spindle nose	Flange Id. number
125	●											A4	24141300	-	-	-	-	A5	24151310	A6	24161310
130/135					●				●												
140 Z120								●				A5	075421	-	-	-	-	-	-	-	-
140 Z130					●							A5	24151400	A4	24141400	-	-	A6	24161410	-	-
160/165	●			●	●		●					A5	24151600 24151700*	A4	24141600	-	-	A6	24161610	A8	24181710
170 Z140	●							●	●												
170 Z160									●			A6	24161720	A5	24151720	-	-	A8	24181720	-	-
175					●																
200				●								A6	24162000 24162500*	A5	24152000	-	-	A8	24182010	-	-
210/215	●				●		●	●	●												
220/225					●			●		●											
260 Z170								●													
250	●			●	●		●		●			A8	24182500 24182510*	A6	24162530	A5	24152500	A11	24112510	-	-
260 Z220	●				●	●		●	●	●											
315 Z220	●			●				●	●												
320 Z280						●			●			A11	24113500	A6	24163500						
315/320					●		●	●	●			A11	24113100 24113110*	A8	24183100 24184000*	A6	24163100	A15	24123110	-	-
330 Z300										●											
400 Z300	●				●		●	●	●		●										
450 Z300	●				●		●	●	●												
500 Z300								●													
400 Z380								●				A15	24125000 24127100*	A11	24115000	A8	24185000	A20	24175000	-	-
480 Z380						●															
500 Z380	●	●	●		●		●	●			●										
630 Z380	●	●	●				●	●			●										
800 Z380			●																		
630/800	●	●			●						●	A20	24178000	A15	24126100	A11	24116100	-	-	-	-
1000 Z520		●	●								●										
1250 Z520			●																		
1400 Z720			●									-	-	A20	24179400	-	-	-	-	-	-
1600 Z720			●																		
1800 Z720			●																		
2000 Z720			●																		

* **Suggestion:** This flange is thicker than the standard one, to be used only if necessary!
Note (1): For 285 FRC/FRS see 250 AN-, for 365 FRC/FRS see 400 AN-

Mounting flanges on short taper spindle noses

- Direct and indirect mounting
- Reduction and increase mounting

Chuck flanges

DIN 55026 / ISO-A 702/1

Type FF 1
ISO-A mounting direct

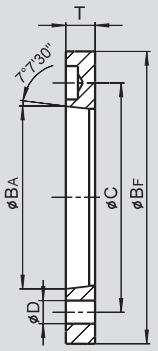

Type FF 2
ISO-A mounting reduction

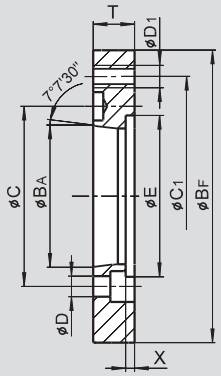

Type FF 3
ISO-A mounting increase

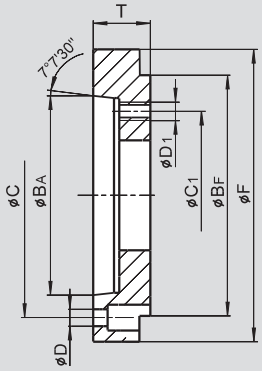

Subject to technical changes

Flange type FF 1

Flange Id. No.	Spindle nose	BF mm	BA mm	C mm	D mm	T mm	Weight kg
24141300	A4	115	63.513	82.6	11.5	13	0.6
075421	A5	120	82.563	104.8	10.5	16	0.7
24151400	A5	130	82.563	104.8	11.5	15	0.75
24151600	A5	140	82.563	104.8	11.5	15	1
24151700*	A5	140	82.563	104.8	11.5	24	1.5
24161720	A6	160	106.375	133.4	13.5	17	1.2
24162000	A6	170	106.375	133.4	13.5	17	1.5
24162500*	A6	170	106.375	133.4	13.5	24	2.2
24182500	A8	220	139.719	171.4	17	19	2.7
24182510*	A8	220	139.719	171.4	17	27	4
24183050	A8	280	139.719	171.4	17	19	6.5
24113100	A11	300	196.869	235	21	21	5.5
24113110*	A11	300	196.869	235	21	30	8
24113500	A11	280	196.869	235	21	21	4
24125000	A15	380	285.775	330.2	25	23	8
24127100*	A15	380	285.775	330.2	25	33	11.5
24178000	A20	520	412.775	463.6	27	25	14.5

* **Suggestion:** This flange is thicker than the standard one, to be used only if necessary!

Flange type FF 2

Flange Id. No.	Spindle nose	BF mm	BA mm	C mm	D mm	C1 mm	D1 mm	E mm	X mm	T mm	Weight kg
24141400	A4	130	63.513	82.6	11.5	104.8	M10	-	-	20	1.2
24141600	A4	140	63.513	82.6	11.5	104.8	M10	-	-	20	1.6
24151720	A5	160	82.563	104.8	11.5	133.4	M12	-	-	24	2.2
24152000	A5	170	82.563	104.8	11.5	133.4	M12	-	-	24	2.7
24152500	A5	220	82.563	104.8	11.5	171.4	M16	-	-	24	5.5
24162530	A6	220	106.375	133.4	13.5	171.4	M16	-	-	24	5
24163100	A6	300	106.375	133.4	13.5	235	M20	155	10	30	11
24163500	A6	280	106.375	133.4	13.5	235	M20	-	-	30	9
24183100	A8	300	139.719	171.4	17	235	M20	-	-	30	11.5
24184000*	A8	300	139.719	171.4	17	235	M20	155	10	40	15.5
24185000	A8	380	139.719	171.4	17	330.2	M24	197	10	40	24
24115000	A11	380	196.869	235	21	330.2	M24	197	10	40	21
24116100	A11	520	196.869	235	21	463.6	M24	267	12	45	54
24126100	A15	520	285.775	330.2	25	463.6	M24	-	-	40	40
24179400	A20	720	412.775	463.6	27	647.6	M30	-	-	50	93

* **Suggestion:** This flange is thicker than the standard one, to be used only if necessary!

Flange type FF 3

Flange Id. No.	Spindle nose	BF mm	BA mm	C mm	D mm	C1 mm	D1 mm	F mm	T mm	Weight kg
24151310	A5	115	82.563	104.8	11.5	82.6	M10	127	30	1.7
24161310	A6	115	106.375	133.4	13.5	82.6	M10	165	35	3.5
24161410	A6	130	106.375	133.4	13.5	104.8	M10	165	35	3.4
24161610	A6	140	106.375	133.4	13.5	104.8	M10	165	35	3.3
24181710	A8	140	139.719	171.4	17	104.8	M10	210	35	5.2
24181720	A8	160	139.719	171.4	17	133.4	M12	210	40	5.8
24182010	A8	170	139.719	171.4	17	133.4	M12	210	40	6.2
24112510	A11	220	196.869	235	21	171.4	M16	280	45	11.8
24123110	A15	300	285.775	330.2	25	235	M20	380	50	22
24175000	A20	380	412.777	463.6	27	330.2	M24	520	58	55

Hard top jaws, soft top jaws, T-nuts

- Inch serrated
- Metric serrated
- Tongue & groove

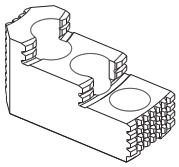
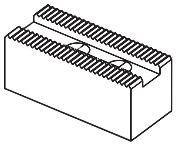
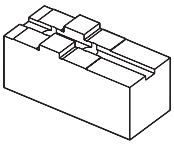
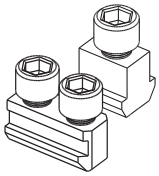

JAWS-CATALOG

Request or download: www.smw-autoblok.de

JAW FINDER

free application to search for jaws very quick and easy

www.smw-autoblok.de

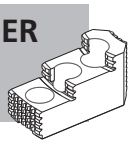

The easy way to mount the right top jaws on your SMW-AUTOBLOK chuck

	Chuck series														Hard top jaws		Soft top jaws	T-nuts	
	Chuck Ø	AN-, AL-,	AP-, NT-	APL-, NTL-	IEP-*	IN-, IL-	CL-	BH-	BH-FC	BB-	BP-	RAN	PB-, PBI-, HB-	HYN-, HYL-	Set of 3 hard top jaws Id. No. / Set	Set of 4 hard top jaws Id. No. / Set	Soft top jaws Id. No. / piece	T-nut type	T-nuts Id. No. / piece (see page 398)
INCH SERRATION "D"	125	●													12081306	12081308	12071300	3	12061200
	130							●					●		12081306	12081308	12071300	2	12061300
	140									●									
	165/170	●	●					●	●				●		12081636	12081638	12071680	3	73061650
	175/180									●				●					
	200						●								-	-	12072500	1	12062500
	210/215	●	●					●	●	●			●	●	12082036	12082038	12072130	3	73062150
	220/226										●			●					
	260		●	●							●				12082626	-	12072620	3	18062632
	250	●						●	●	●			●	●	12083036	12083038	12072500	3	73063050
	250						●								-	-	90072500	1	12065020
	315						●												
	315-320	●	●	●				●	●	●	●		●	●	12083036	12083038	12073000	3	73063050
	400				●										12083036	-	12073000	3	73063050
	400/450	●						●	●					●	12084546	12084548	12074040	1	12065020
	400		●	●											12084546	-	12074040	3	73065030
	500			●											12084546	-	12075050	3	73065030
	500							●	●						12084546	-	12075050	1	12065020
	500-550													●	12084546	12084548	12075050	1	12065082
	630													●					
	500					●									12086346	12086348	12075040	1	12065002
	630					●													
	500				●										12084546	-	12075050	3	73065030
	630-800			●	●										12084546	-	12075050	3	73065030
	630								●						12084546	-	12075050	3	12065020
	630							●							12086346	12086348	12075140	1	12065020
	800							●											
	800					●								●	12086346	12086348	12075040	1	12065002
	1000			●											12084546	-	12075050	3	73065030
METRIC SERRATION "M"	125	●													12081307	12081309	12071301	3	12061200
	130							●					●		12081307	12081309	12071301	2	12061300
	140									●									
	165/170	●	●					●					●		12081627	12081629	12071621	4	73061602
	175									●									
	210/215/220	●	●					●		●	●		●		12082127	12082129	12072121	4	73062101
	250	●						●		●			●		12082627	12083039	12072621	4	73062501
	250-260		●	●				●			●				12082627	12082629	12072621	4	18062633
	315/320	●	●	●				●		●	●		●		12083037	12083039	12073001	3	73063050
	400		●	●											12084527	-	12074021	2	12064520
	400/450	●						●							12084527	12084529	12074021	1	12064020
TONGUE & GROOVE "C"	80						●								-	-	90040800	-	-
	100						●								-	-	90041000	-	-
	125						●								-	-	90041300	-	-
	160						●								-	-	90041600	-	-
	160/220										●	●			-	-	12041660	-	-
	165/170	●	●										●		-	-	12041660	-	-
	200											●			-	-	12042060	-	-
	210/215	●	●										●		-	-	12042060	-	-
	250/260	●	●	●								●	●		-	-	12042560	-	-
	260										●				-		12042060		
	320										●				-	-	12042560	-	-
	315/400	●	●	●	●							●	●		-	-	12043060	-	-
	400/500	●	●	●								●			-	-	12044050	-	-
	500				●	●									-	-	12045050	-	-
	630				●	●													
	630-800			●											-	-	12044050	-	-
	800				●	●									-	-	12045050	-	-
	1000			●											-	-	12044050	-	-

* for IEP use 2 set of 3 hard jaws.

Hard top jaws, soft top jaws

- Inch serrated
- Metric serrated
- Tongue & groove

MHB-D

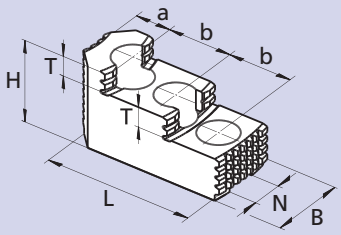

INCH SERRATED hard top jaws "D" MHB-D

■ If high concentricity is required jaws have to be ground on the chuck at clamping pressure

Id. No.*	Serration inch	B mm	H	L mm	N mm	T mm	a mm	b mm	Weight kg/jaw
12081306	1/16"x 90°	30	34	58	12	8.5	13	16	0.2
12081636	1/16"x 90°	34	39	65	14	10	18	16.5	0.3
12082036	1/16"x 90°	40	45	82	17	10.5	19	23	0.57
12082626	1/16"x 90°	45	56	100	17	15.5	23	30	0.85
12083036	1/16"x 90°	45	56	105	21	13.5	26	30	0.95
12084506	1/16"x 90°	60	75	140	21	19	38	38	2.6
12084546	3/32"x 90°	60	75	140	25.5	19	38	38	2.5
12086346	3/32"x 90°	74	74	145	25.5	32	46	38	3

* The number refers to a set of 3 jaws; for the set of 4 jaws the final number is not 6 but 8.

WBSA-D

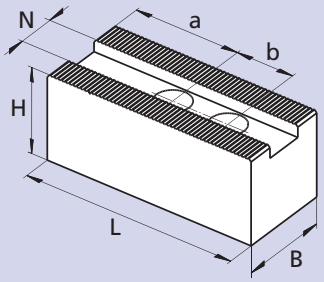

INCH SERRATED soft blank top jaws "D" WBSA-D

Id. No.	Serration inch	B mm	H mm	L mm	N mm	a mm	b mm	Weight kg/jaw
12071300	1/16"x 90°	30	30	60	12	29	16	0.3
12071680	1/16"x 90°	30	35	70	14	38	16.5	0.42
12072130	1/16"x 90°	35	40	90	17	47	23	0.85
12072620	1/16"x 90°	45	45	110	17	60	30	1.23
12072500	1/16"x 90°	45	45	110	21	60	30	1.25
90072500	1/16"x 90°	60	60	120	25.5	64	34	2.6
12073000	1/16"x 90°	50	50	125	21	73	30	1.85
12074030	1/16"x 90°	60	60	140	21	81	34	3.2
12074040	3/32"x 90°	60	60	140	25.5	75	38	3.2
12075050	3/32"x 90°	60	60	170	25.5	105	38	3.6
12075040	3/32"x 90°	75	75	160	25.5	97	38	5.5
12075140	3/32"x 90°	60	60	205	25.5	104	38	4.5

MHB-M

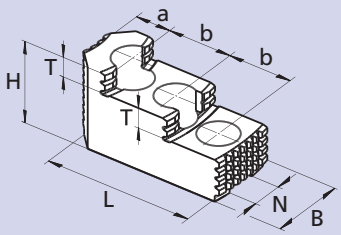

METRIC SERRATED hard top jaws "M" MHB-M

■ If high concentricity is required jaws have to be ground on the chuck at clamping pressure

Id. No.	Serration mm	B mm	H mm	L mm	N mm	T mm	a mm	b mm	Weight kg/jaw
12081307	1.5 x 60°	30	34	58	12	8.5	13	16	0.2
12081627	1.5 x 60°	34	39	67	12	10	14	20	0.31
12082127	1.5 x 60°	40	45	86	14	10.5	19	25	0.60
12082627	1.5 x 60°	45	56	100	16	15.5	23	30	0.85
12083037	1.5 x 60°	45	56	105	21	13.5	26	30	0.95
12084527	1.5 x 60°	60	75	140	22	19	38	38	2.5

* The number refers to a set of 3 jaws; for the set of 4 jaws the final number is not 7 but 9.

WBSA-M

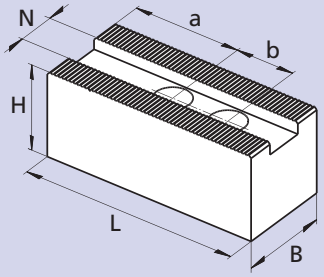

METRIC SERRATED soft blank top jaws "M" WBSA-M

Id. No.	Serration mm	B mm	H mm	L mm	N mm	a mm	b mm	Weight kg/jaw
12071301	1.5 x 60°	30	30	60	12	29	16	0.3
12071621	1.5 x 60°	30	35	70	12	34	20	0.42
12072121	1.5 x 60°	35	40	90	14	47	25	0.85
12072621	1.5 x 60°	45	45	110	16	60	30	1.3
12073001	1.5 x 60°	50	50	125	21	73	30	1.85
12074021	1.5 x 60°	60	60	140	22	75	38	3.2
12074031	1.5 x 60°	60	60	140	21	81	34	3.2
12074041	1.5 x 60°	60	60	140	25.5	75	38	3.2

WAK-A

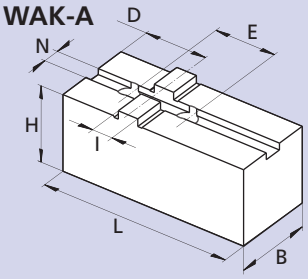

TONGUE & GROOVE soft blank top jaws "C" WAK-A

■ American Standard Tongue & groove

Id. No.	B mm	H mm	L mm	N mm	D mm	E mm	I mm	Weight kg/jaw
12041660	30	32	80	7.94	30	38.1	12.68	0.58
12042060	35	37	100	7.94	35	44.4	12.68	0.92
12042560	45	42	120	12.70	42	54	19.03	1.25
12043060	50	47	140	12.70	50	63.5	19.03	2.15
12044050	60	55	165	12.70	60	76.2	19.03	3.6
12045050	75	70	165	12.70	60	76.2	19.03	5.5

Soft top jaws, T-nuts

■ Tongue & groove

WBK

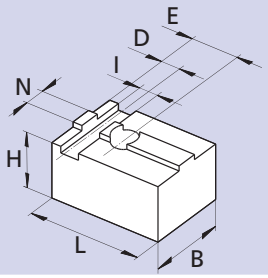

TONGUE & GROOVE soft blank top jaws "C" WBK

■ DIN standard TONGUE & GROOVE
■ For CL-C chucks

Id. No.	B mm	H mm	L mm	N mm	D mm	E mm	I mm	Weight kg/jaw
90040800	30	28	38	8	8	14	8	0.18
90041000	30	28	48	8	8	20	8	0.23
90041300	35	32	57	14	27	27	16	0.40
90041600	40	37	75	18	34	34	18	0.72

NST

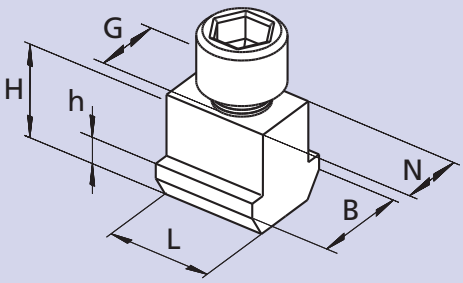

Single T-nut NST

■ Type 1 (see table at general catalog page 396)

Id. No.	B mm	H mm	L mm	N mm	G mm	h mm
12063000	29	25	24	21	M16	11
12064020	35	34.5	30	22*	M20	15
12065020	35	34	30	25.5	M20	15
12065082	36	34	30	25.5**	M20	15
12065002	40	40	32	25.5**	M20	15.5

* 22 mm guide in the top jaw and 25.5 mm guide in the master jaw
** 25.5 mm guide in the top jaw and 28 mm guide in the master jaw

NSTE

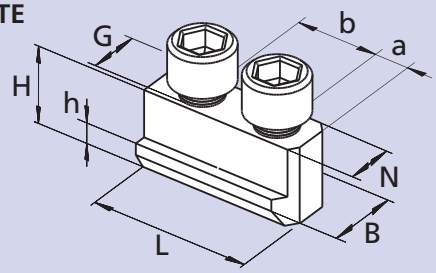

Double T-nut NSTE

■ Type 2 (see table at general catalog page 396)

Id. No.	B mm	H mm	L mm	N mm	G mm	a mm	b mm	h mm
12061300	17	15	30	12	M8	7	16	6.5
73064030	31	33	60	21	M16	13	34	14.5
12064520	31	33	70	22	M20	16	38	14.5

NSTE

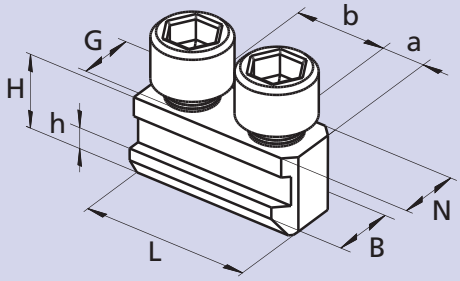

Double T-nut NSTE

■ Type 3 (see table at general catalog page 396)

Id. No.	B mm	H mm	L mm	N mm	G mm	a mm	b mm	h mm
12061200	15	15	32	12	M8	6.5	16	6.5
73061650	17	18.5	32	14	M10	8	16.5	6.5
73062150	19	20.5	43	17	M12	10	23	7.5
18062632	19	20.5	50	17	M12	10	30	7.5
73063050	25	26.5	56	21	M16	13	30	10
73065030	31	33	70	25.5	M20	16	38	14.5

NSTE-M

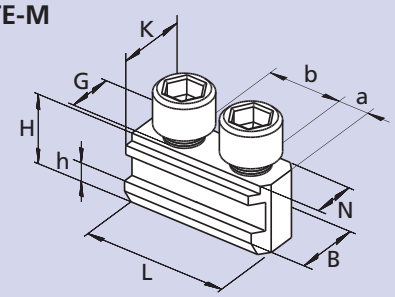

Double T-nut NSTE-M

■ Type 4 (see table at general catalog page 396)
■ For metric serrated master jaws to use existing Kitagawa top jaws

Id. No.	B mm	H mm	L mm	N mm	K mm	G mm	a mm	b mm	h mm
73061602	17	18.5	36	12	14	M10	8	20	6.5
73062101	19	20.5	45	14	17	M12	10	25	7.5
18062633	19	20.5	50	16	17	M12	10	30	7.5
73062501	25	26.5	56	16	21	M12	13	30	10

JAWS-CATALOG
Request or download: www.smw-autoblok.de

Clamping ranges with standard stepped hard top jaws

■ Standard chucks Ø 125 - 800 mm

2 step top jaws

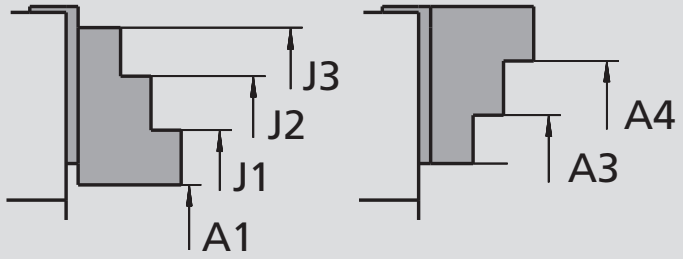

1 step top jaws*

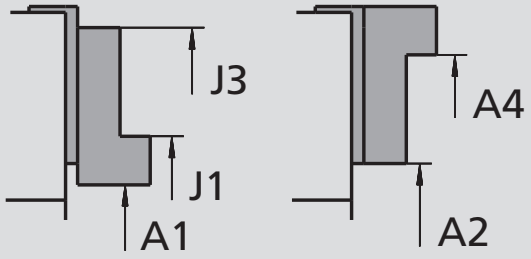

Chuck diameter	Chuck type	Top jaws Id. No. Serr. "D"	Top jaws Id. No. Serr. "M"	A1 mm	A2 mm	A3 mm	A4 mm	J1 mm	J2 mm	J3 mm
125	AN-, AL-	12081306	12081307	10-54	-	54-92	90-120	56-100	90-135	125-170
165-170	AN-, AL-, AP-, NT-	12081636	12081627	14-80	-	62-125	110-155	65-125	115-175	145-210
210-215	AN-, AL-, AP-, NT-	12082036	12082127	20-100	-	72-150	150-200	75-150	145-230	190-265
250	AN-, AL-	12083036	12082627	20-115	-	105-205	190-235	80-165	155-250	230-325
260	AP-, NT-	12082626	12082627	20-130	-	105-215	180-245	80-180	155-260	220-330
315	AN-, AL-, AP-, NT-	12083036	12083037	30-170	-	120-265	205-300	95-225	165-310	240-380
400	AN-, AL-	12084546	12084527	52-205	-	180-330	280-370	140-285	240-385	330-480
400	AP-, NT-	12084546	12084527	35-200	-	165-325	260-370	125-280	220-380	315-480
500	IN-D, IL-D	12086346*	-	80-320	125-365	-	320-475	180-420	-	370-610
630	IN-D, IL-D	12086346*	-	80-440	125-485	-	320-600	180-540	-	370-730
800	IN-D, IL-D	12086346*	-	80-610	125-655	-	320-760	180-710	-	370-900
500	APLD	12084546	-	60-310	-	185-440	285-470	145-390	245-490	340-590
630	APLD	12084546	-	60-440	-	185-570	285-600	145-520	245-620	340-720
800	APLD	12084546	-	60-610	-	185-740	285-760	145-690	245-790	340-890
500	IEPD	12084546	-	85-320	-	210-450	310-480	170-400	270-500	370-600
630	IEPD	12084546	-	85-440	-	210-570	310-600	170-520	270-620	370-720
800	IEPD	12084546	-	85-610	-	210-740	310-760	170-690	270-790	370-890
130	BH-, BH-	12081306	12081307	10-58	-	55-97	90-120	58-105	90-140	125-175
140	BB-, BB-	12081306	12081307	16-65	-	55-105	90-130	65-110	98-148	132-182
165	BH-, BH-FC, RC-	12081636	12081627	12-80	-	62-125	110-155	62-125	105-170	145-210
175	BB-D, BB-M	12081636	12081627	25-92	-	74-138	120-165	74-138	118-185	155-220
180	HYND-S	12081636	12081627	27-95	-	77-140	125-170	77-140	120-185	160-225
210	BH-, BH-FC, RC-, HYND-S	12082036	12082127	14-100	-	65-150	140-200	65-150	135-230	180-265
210	BB-D, BB-M	12082036	12082127	25-100	-	80-150	155-200	80-150	150-230	195-265
226	HYND-S	12082036	12082127	24-110	-	75-160	150-215	75-160	145-240	190-275
250	BH-D, BHD-FC, RC-, HYND-S	12083036	12083037	20-115	-	105-205	190-235	80-165	155-250	230-325
250	BH-M, BHM-FC	12082626	12082627	20-115	-	105-205	190-235	80-165	155-250	230-325
250	BB-D, BB-M	12083036	12083037	25-115	-	115-205	200-235	85-165	165-250	240-325
305	RC-D, RC-M	12083036	12083037	25-160	-	120-250	205-290	85-215	165-300	240-370
315	BH-, BH-FC, HYND-S	12083036	12083037	40-170	-	135-265	220-300	100-225	180-310	250-380
315	BB-D, BB-M	12083036	12083037	75-170	-	165-265	250-300	130-225	210-310	320-415
400	RC-	12084006	12084007	90-250	-	195-355	285-380	155-315	240-400	330-490
400	BH-, BH-FC, HYND-S	12084546	12084527	52-205	-	180-330	280-370	140-285	240-385	330-480
450	BH	12084546	12084527	52-265	-	180-390	280-430	140-345	240-445	330-540
500	BH	12084546	-	115-325	-	240-450	340-480	200-410	300-510	395-610
500	BH-FC	12084546	-	90-320	-	220-445	320-480	175-400	275-500	370-600
500	HYDL-S	12084546	-	150-320	-	275-445	375-480	230-400	330-500	430-600
550	HYDL-S	12084546	-	200-370	-	330-500	430-535	285-455	385-555	485-655
630	BH	12086346	-	195-420	240-465	-	440-600	295-520	-	490-715
630	BH-FC	12084546	-	135-440	-	260-565	360-600	220-520	315-620	415-720
630	HYDL-S	12084546	-	230-450	-	360-575	460-600	315-530	415-630	515-730
800	BH	12086346	-	195-590	240-635	-	440-760	295-690	-	490-880
800	HYDL-S	12086346	-	245-595	295-640	-	490-760	345-695	-	540-890

* **Note:** AN means AND, ANM; AL means ALD, ALM; AP means APD, APM; NT means NTD, NTM; BH means BHD, BHM; BH-FC means BHD-FC, BHM-FC; RC means RCD, RCM.

JAWS-CATALOG
Request or download: www.smw-autoblok.de

JAWS-CATALOG
Request or download: www.smw-autoblok.de

The economical solution: Roughing jaws with exchangeable grippers

- Made from standard SMW-AUTOBLOK jaws.
- Economical, because only the worn out gripper is changed in seconds.
- Extended life compared to standard roughing jaws.

Features:

- Safe gripping of raw material/forgings/castings made from standard or high tensile strength material.
- Better gripping allows heavier cuts.
- Fast change of worn out grippers.

UGE 10

Id. No. 081845F, Hardened Steel

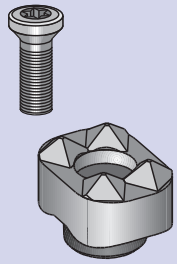

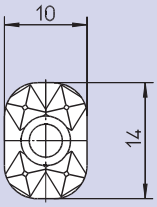

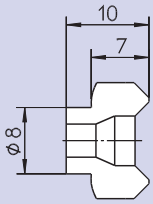

The universal gripper with unique feature:

- For flat and round clamping surfaces
- For external and internal gripping
- Front mounting of bolts
- Gripper seat, round or flat, and thread is easy to produce
- Hardening of gripper seat necessary
- **Torx screw driver Id. No. 085961**
- **Torx screw M4 x 13.5 Id. No. 033010**

Parts included: Gripper with Torx screw

Mounting instruction:

1. Part Ø D + 6 mm (0.23 inch) + location + slot has to be turned or milled. Please note corrected dimensions according to sketch
2. Drill and tap
3. Harden jaw

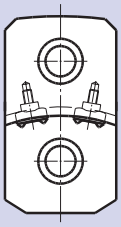

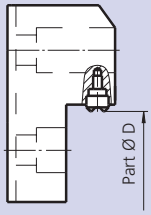

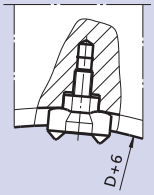

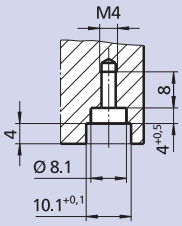

UGE 20

Id. No. 087414, Hardened Steel

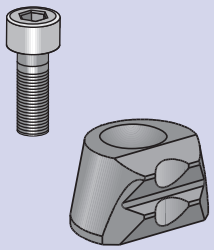

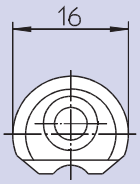

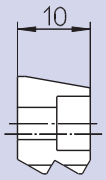

The gripper with the unique shape:

- Top mounting of bolt
- Pull-down effect by wedge shape design
- Can be used fixed or swivelling
- Gripper seat: Milling, drilling and tapping can easily be machined with the inclined milling tool (033611)
- No hardening of jaws necessary
- For external or internal clamping
- Head socket screw M4 x 12 ISO 4762, Id. No. 010145

Parts included: Gripper with head socket screw M4 x 12 ISO 4762

Mounting instruction:

1. Part Ø D + 4 mm (0.16 inch) + location turning or milling
2. Milling of pocket + drilling and tapping

Inclined milling tool Id. No. 033611

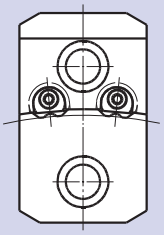

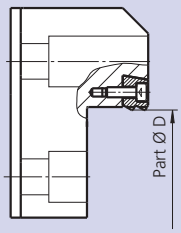

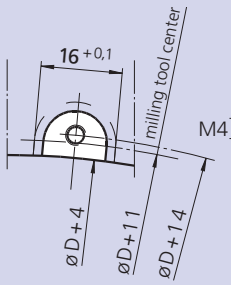

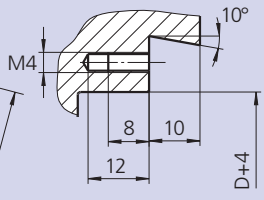

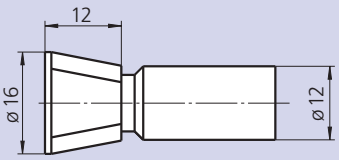

JAWS-CATALOG
Request or download: www.smw-autoblok.de

UGE + FGH

UGE 30

Id. No. 089822, Solid Carbide

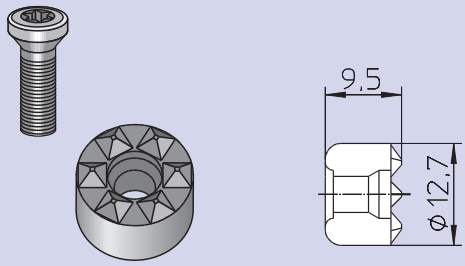

Parts included: Gripper with Torx screw

Gripper for prism jaws and fixtures:

- For external and internal gripping of rectangular parts
- For chuck jaws, fixture jaws and fixtures
- Front mounting of bolt
- Gripper seat: drilling and tapping can easily be done Bottom of seat can be either 120° (standard drill tool) or flat
- For high production hardening of gripper pocket is recommended
- **Torx screw driver Id. No. 085961**

Mounting instruction:

1. Drilling 12.7 Ø bottom of seat 120° or flat
2. Tapping of thread

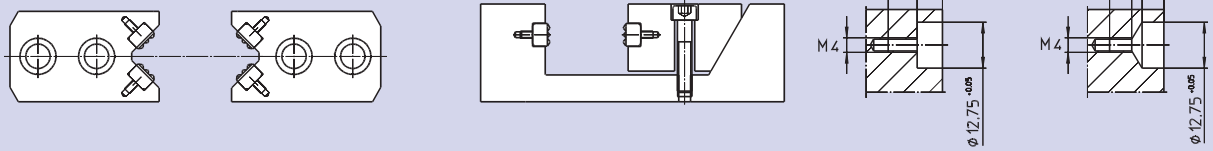

prism jaws **vice** **optional**

FGH 33

Id. No. 71400133
Carbide Tipped
with 12 points

FGH 34

Id. No. 71400134
Carbide Tipped
with 4 blades

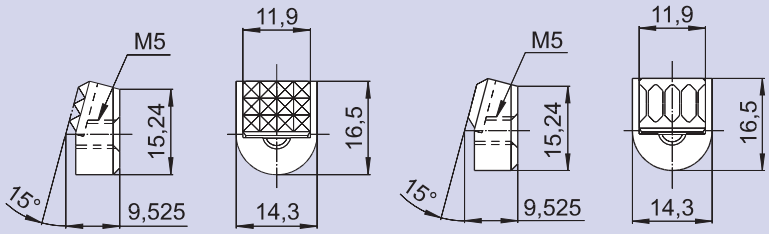

Inclined grippers with pull-down effect:

- For external clamping
- Very short and forward-positioned clamping area
- Rear mounting of bolts
- Inclined gripper seat are easy to be machined
- For high production hardening of gripper seat is recommended

Parts included: Gripper without screw

Mounting instruction for FGH grippers:

1. With 15° inclined top-jaw, mill the Ø 14.3 gripper seat.
2. Drill Ø 5.5 as shown on the drawing.
3. Drill Ø 10.5 for the screw's head.

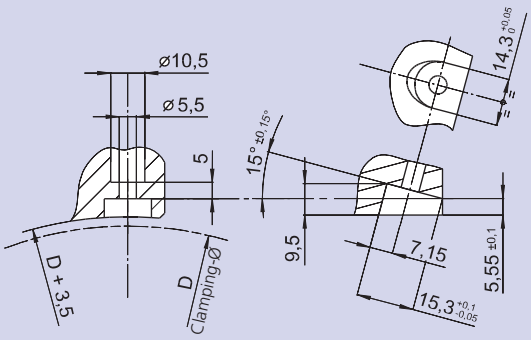

HDS + MGH

Grippers
Clamping tipos

MGH Hardened Steel

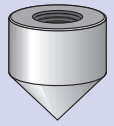

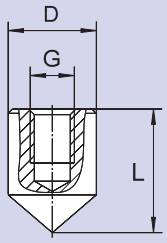

Parts included: Hardened tip without screw

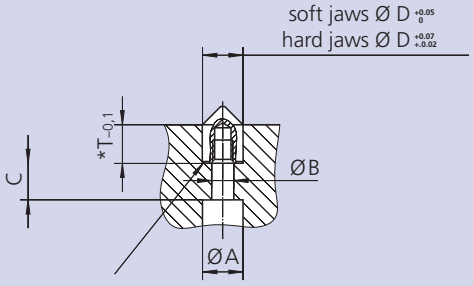

*equal per seth within 0.1 mm

Clamping tips for jaws

- For external and internal gripping
- Increasing gripping allows for heavier cuts
- Rear mounting of bolts
- Point seat can easily be machined: drilling only

Type		MGH 6	MGH 8	MGH 10	MGH 12
Id. No.		081851	087805	081852	081853
D	mm	6	8	10	12
L	mm	10	12	14	16
G	mm	M3	M4	M5	M6
A	mm	6	8	10	11
B	mm	3.4	4.5	5.5	6.6
C	mm	9	9	9	11
T	mm	7.5	8.5	9.5	10.5
R	mm	0.3	0.5	0.5	0.5
Torx Screw ISO 4762		M3 x 14	M4 x 14	M5 x 14	M6 x 16

HDS-R

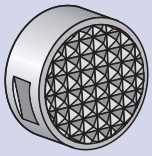

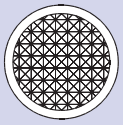

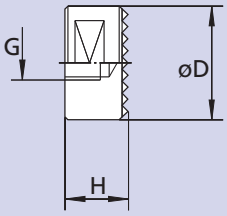

Grippers for jaws, fixtures

- For o.d. gripping
- Increase of the transmittable torque on raw or machined work pieces
- Rear mounting threads or side gaces for locking
- The pocket can easily be machined

HDS-Q

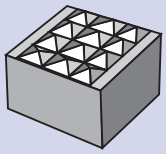

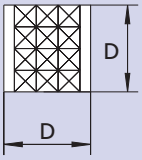

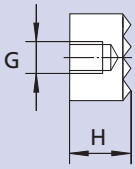

Type	Id. No.	D	H	G	max. load force F[1] (daN)	rec. mounting bore-Ø + 0.05	rec. mounting bore depth
HDS-R 10	081846	10	10	M5	800	10	9.0
HDS-R 11	081847	12.7	9.5	M5	1100	12.7	8.5
HDS-R 12	081848	12.7	12.7	M6	1100	12.7	11.5
HDS-R 13	081849	15.8	9.5	M6	2000	15.8	8.5
HDS-R 14	081850	19	9.5	M6	3000	19	8.5
HDS-Q 15	033058	12.7	9.5	M6	2000	–	–

G14 + G25

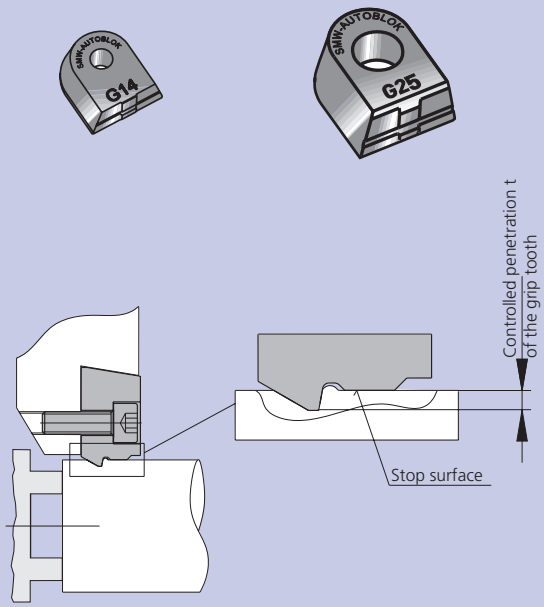

G-gripper characteristics

- Type G grippers have a stop surface for a **controlled penetration** of the grip tooth.
- **The workpiece is clamped concentric on the stop surface**, so that the clamping dia. and the machining dia. are concentric.
- The **high precision** of the gripper guarantees concenricity even after replacing worn out grippers.
- Highest torque transmission is guaranteed with the **combination of friction and positive drive**.
- The geometry of the gripper creates a **pull down effect** on the workpiece.
- **TIN coated high speed steel** for long life.
- You can **select the corresponding gripper** for all applications according to the grindstock allowance.
- Gripper with **controlled penetration** 0.070 - 0.30 mm are standard.
- **Special grippers are available** on request.

G14 (light duty version) material: HSS

Mounting dimension

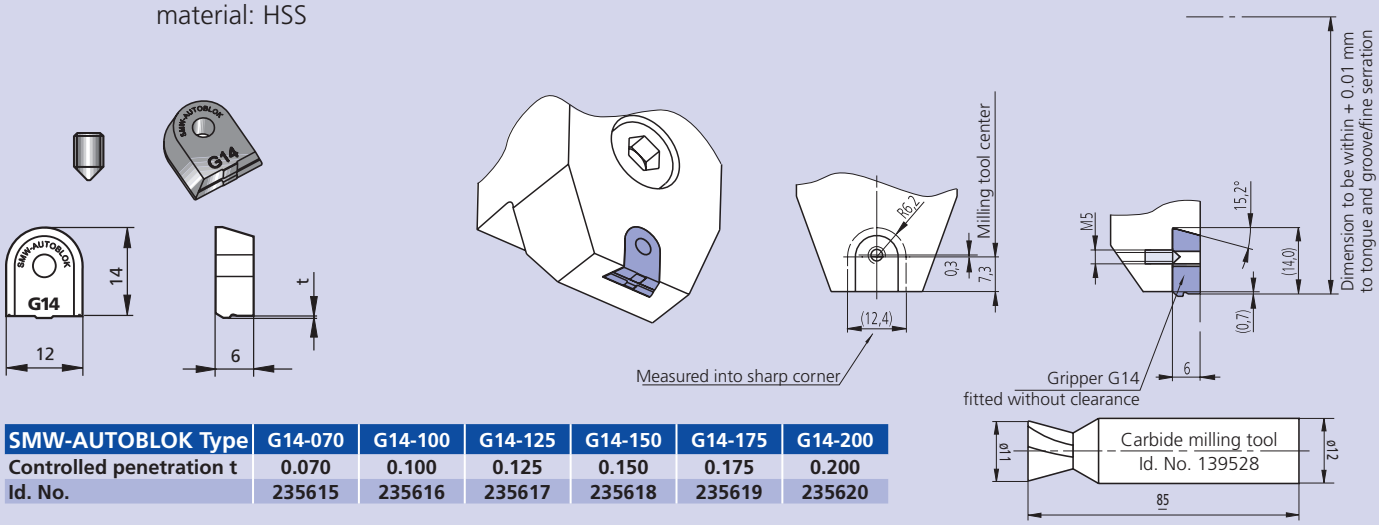

SMW-AUTOBLOK Type	G14-070	G14-100	G14-125	G14-150	G14-175	G14-200
Controlled penetration t	0.070	0.100	0.125	0.150	0.175	0.200
Id. No.	235615	235616	235617	235618	235619	235620

G25 (heavy duty version) material: HSS

Mounting dimension

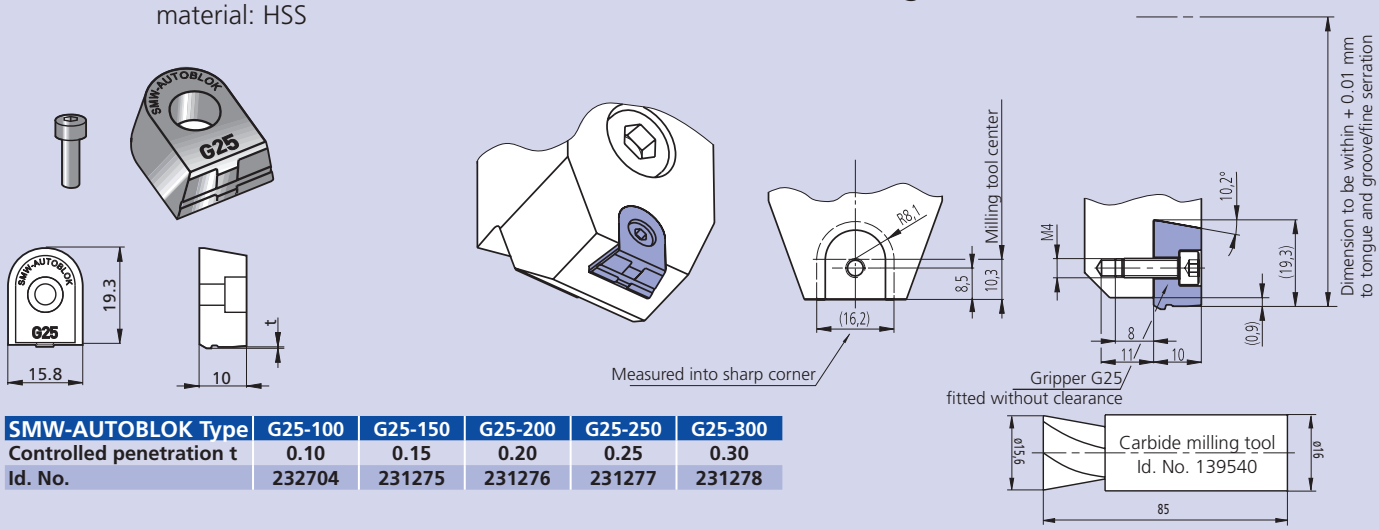

SMW-AUTOBLOK Type	G25-100	G25-150	G25-200	G25-250	G25-300
Controlled penetration t	0.10	0.15	0.20	0.25	0.30
Id. No.	232704	231275	231276	231277	231278

G15 + G30

Precision gripper

■ For highest torque transmission

G15 + G30

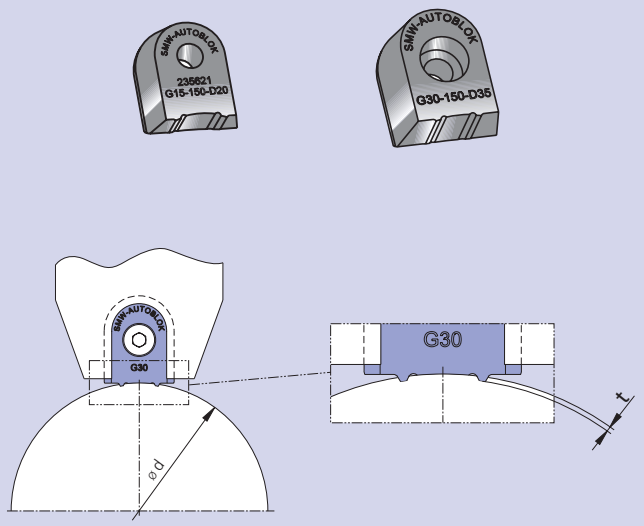

G-gripper characteristics

- Type G grippers have a stop surface for a **controlled penetration** of the grip tooth.
- **The workpiece is clamped concentric on the stop surface**, so that the clamping dia. and the machining dia. are concentric.
- The **high precision** of the gripper guarantees concentricity even after replacing worn out grippers.
- Highest torque transmission is guaranteed with the **combination of friction and positive drive**.
- **TIN coated high speed steel** for long life.
- You can **select the corresponding gripper** for all applications according to the grindstock allowance.
- Gripper with **controlled penetration** 0.15 - 0.30 mm are standard.
- **Special grippers are available** on request.

G15

(light duty version)
material: HSS

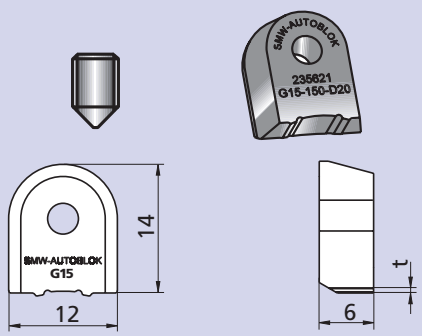

SMW-AUTOBLOK Type	G15-150	G15-200	G15-250
Work piece-Ø		17 - 21	
Controlled penetration t	0.15	0.20	0.25
Id. No.	235621	235622	235623
Work piece-Ø		22 - 27	
Controlled penetration t	0.15	0.20	0.25
Id. No.	237762	237763	237764
Work piece-Ø		28 - 34	
Controlled penetration t	0.15	0.20	0.25
Id. No.	235624	235625	235626
Work piece-Ø		35 - 42	
Controlled penetration t	0.15	0.20	0.25
Id. No.	237765	237766	237767
Work piece-Ø		43 - 53	
Controlled penetration t	0.15	0.20	0.25
Id. No.	235627	235628	235629
Work piece-Ø		54 - 78	
Controlled penetration t	0.15	0.20	0.25
Id. No.	237400	237401	237402
Work piece-Ø		79 - 175	
Controlled penetration t	0.15	0.20	0.25
Id. No.	237409	237410	237411

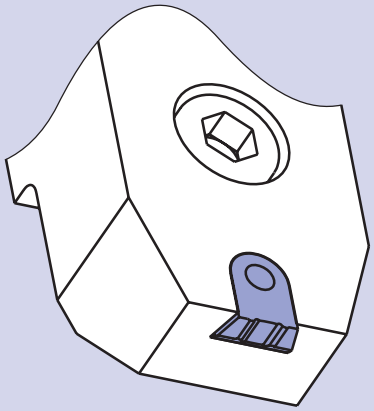

Mounting dimension

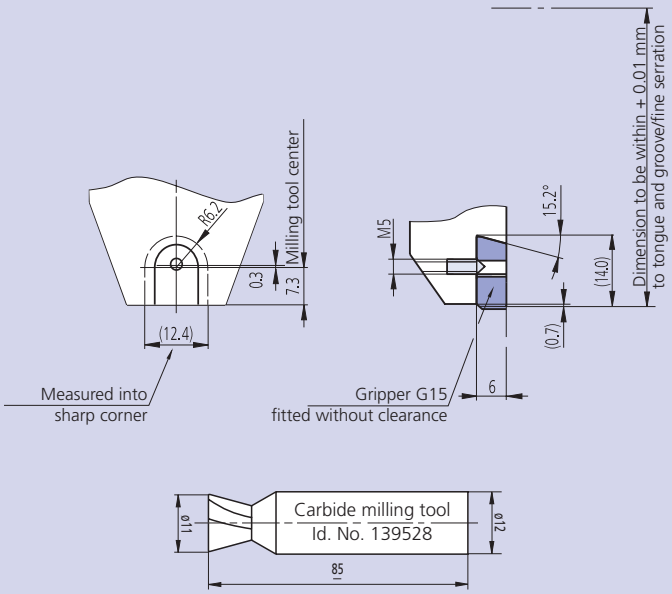

■ For highest torque transmission

G30

(heavy duty version)
material: HSS

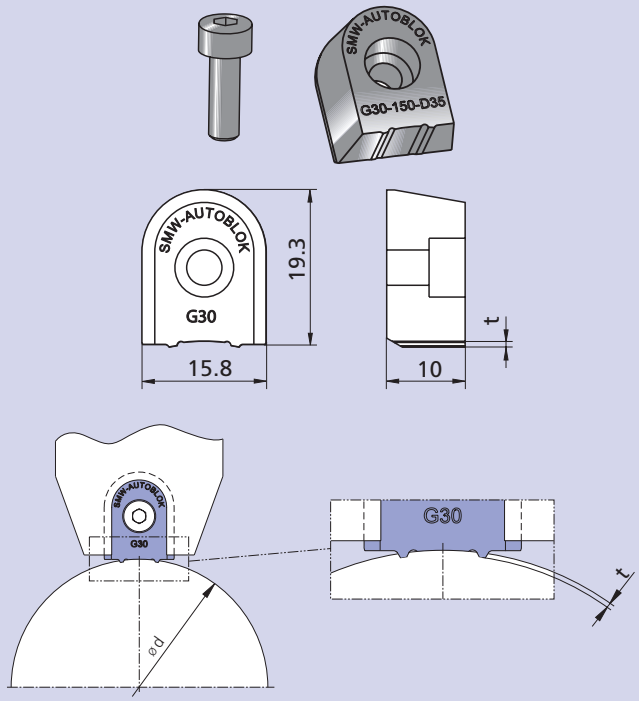

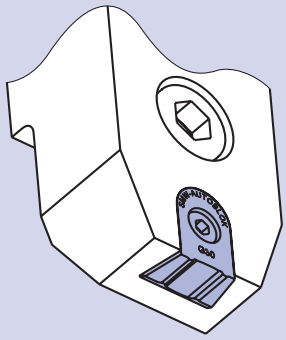

Mounting dimension

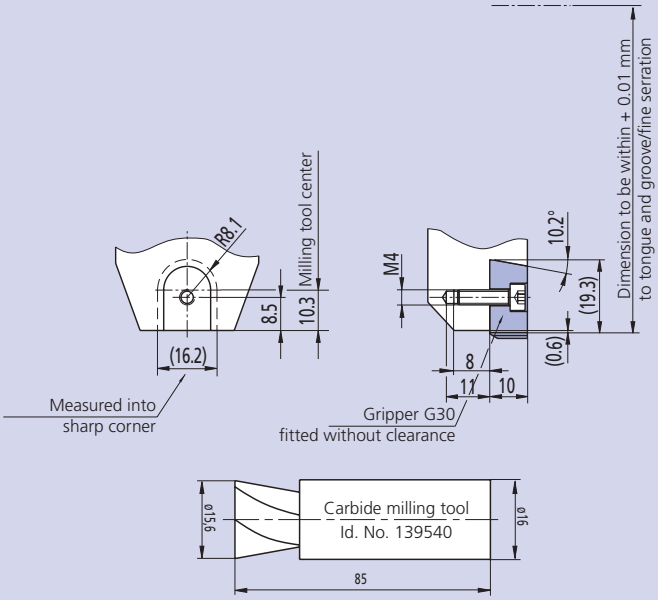

SMW-AUTOBLOK Type	G30-200	G30-250	G30-300
Work piece-Ø		24 - 32	
Controlled penetration t	0.20	0.25	0.30
Id. No.	237841	237842	237843
Work piece-Ø		33 - 42	
Controlled penetration t	0.20	0.25	0.30
Id. No.	233481	233482	233483
Work piece-Ø		43 - 52	
Controlled penetration t	0.20	0.25	0.30
Id. No.	233421	233422	233423
Work piece-Ø		53 - 64	
Controlled penetration t	0.20	0.25	0.30
Id. No.	233485	233486	233487
Work piece-Ø		65 - 84	
Controlled penetration t	0.20	0.25	0.30
Id. No.	234811	234812	234813
Work piece-Ø		85 - 119	
Controlled penetration t	0.20	0.25	0.30
Id. No.	237291	237292	237293
Work piece-Ø		120 - 174	
Controlled penetration t	0.20	0.25	0.30
Id. No.	237299	237300	237301
Work piece-Ø		175 - 335	
Controlled penetration t	0.20	0.25	0.30
Id. No.	237422	237423	237424

ADVL ADVS Boring fixture

■ To bore jaws on the chuck

Boring fixture ADVL

- For low grip forces up to 3000 daN.
- To bore soft or quenched jaws on manual chucks.
- Adjustment of the clamping diameter by turning the scroll or reversing the inserts.
- The fixture can cover a large range.

Light duty version

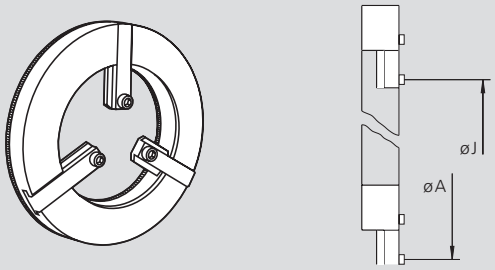

Type	Id. No.	External-Ø mm	Internal-Ø mm	Clamping range A	Clamping range J	Grip force max (daN)	Weight kg/piece
ADVL 150	**081903**	153	110	von 150 bis 215	von 50 bis 115	1500	1.5
ADVL 180	**081904**	176	110	von 170 bis 260	von 35 bis 125	3000	3.3
ADVL 220	**081905**	215	135	von 215 bis 285	von 70 bis 140	3000	5.2
ADVL 250	**081906**	244	162	von 240 bis 315	von 100 bis 175	3000	5.6
ADVL 290	**081907**	290	208	von 290 bis 360	von 145 bis 215	3000	6.8

Boring fixture ADVS

- For higher grip forces up to 7500 daN.
- To bore soft or quenched jaws on manual or power chucks.
- To grind hard jaws on manual or power chucks.
- Mainly used on power chucks.
- Adjustment of the clamping dia. by turning the scroll or reversing the inserts.
- The fixture can cover a large range.

Heavy duty version

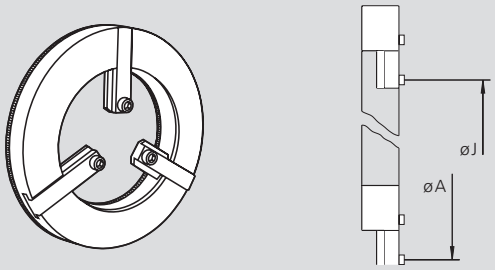

Type	Id. No.	External-Ø mm	Internal-Ø mm	Clamping range A	Clamping range J	Grip force max (daN)	Weight kg/piece
ADVS 230	**081910**	225	135	von 229 bis 305	von 81 bis 157	4500	7.0
ADVS 290	**081909**	288	184	von 292 bis 368	von 128 bis 204	6000	11.5
ADVS 370	**081911**	370	250	von 388 bis 464	von 208 bis 284	7500	21.0

Boring rings

ADS

■ To bore jaws on the clamping chuck

ADS, Id. No. 082689

Parts included:
- Packing box
- Boring rings 36 pieces
- Loading tool

Applications

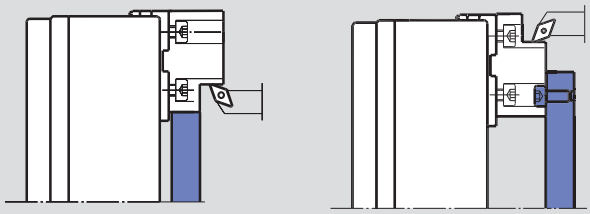

external clamping internal clamping

The advantages of the SMW-AUTOBLOK boring rings for jaws:

- Complete set to bore all dia. from 20 to 150 mm.
- Set consisting of 36 rings Ø 20 - 50 mm each stepped 2 mm. From Ø 50 - 150 mm stepped in 5 mm increments.
- Clearly organized in packing box.
- Rings from Ø 105 mm and up have 3 tapped holes for clamping bolts to machine jaws for internal gripping.
- Rigid design. Rings are 10 mm thick, quenched for greater durability.
- Loading tool is used for the safe insertion of the rings without danger of injuries.

Recommendations:

For highest repeatability and accuracy please follow these instructions:

- Always tighten mounting bolts of the top jaws with a torque wrench.
- Always position boring rings as close as possible to the clamping area.
- Always bore top jaws at machining pressure.

Dress and cleaning plate RPS

■ With 2 different fine serrations to clean and dress top jaws
■ With fine serration inch/metric

- Dress and cleaning plate, hardened, precision ground serrations.
- 2 different serrations, on the upper and lower side of the plate. Just turn it!
- Rapid cleaning of the top jaws serration. Swarf and dirt is accumulated in the diagonal groove.
- Dressing of light damage on the serration by using the grinding compound.

SMW-AUTOBLOK Type	Id. No.	Serration upper side	Serration lower side	kg
RPS-D	081912	1/16" x 90°	3/32" x 90°	7.8
RPS-M	081914	1.5 x 60°	3 x 60°	7.8
RPS-MD	081913	1.5 x 60°	1/16" x 90°	7.8

Parts included:
- Dress and cleaning plate
- 1 tube of grinding paste
- Wooden box

Extra grinding paste:
Id. No. 037133

Dressing and cleaning of serration

Apply grinding compound (corn 320) near the outer edge.

Put the jaw on the grinding compound and move it back and forth, with a light pressure.

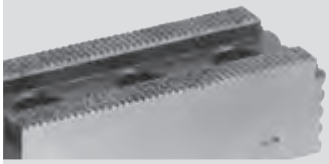

Dirty/damaged serration

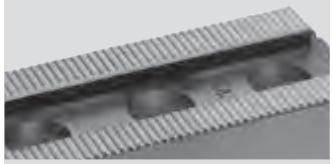

Serration after dressing and cleaning

MULTI DEVICE

Gripping Force Tester GFT-X 4.0

Wireless gripping force and speed measuring of jaw chucks and collet chucks in dynamic or static measuring mode.

Measuring heads

M3/M4
Measuring heads for jaw chucks
Clamping-Ø 72 to 108 mm

Measuring head convertible for 2 and 3 jaws

Measuring head	Range/gripping force	
	2 Jaws	3 Jaws
M3	0 to 180 kN	0 to 270 kN
	Id. No. 207074	
M4	0 to 30 kN	0 to 45 kN
	Id. No. 207259	

Separate measuring head for 2, 3 and 6 jaws

Measuring head	Range/ gripping force
	6 Jaws
M3-6	0 to 270 kN
	Id. No. 207586
M4-6	0 to 45 kN
	Id. No. 207587

M2
Measuring head for collet chucks
Clamping-Ø 42 mm

For collets with 3 segments

Measuring head	Range/ gripping force
	Collets
M2	0 to 120 kN
	Id. No. 207258

M1
Measuring head for collet chucks
Clamping-Ø 18 mm

For collets with 3 segments

Measuring head	Range/ gripping force
	Collets
M1	0 to 75 kN
	Id. No. 207257

Features GFT-X 4.0

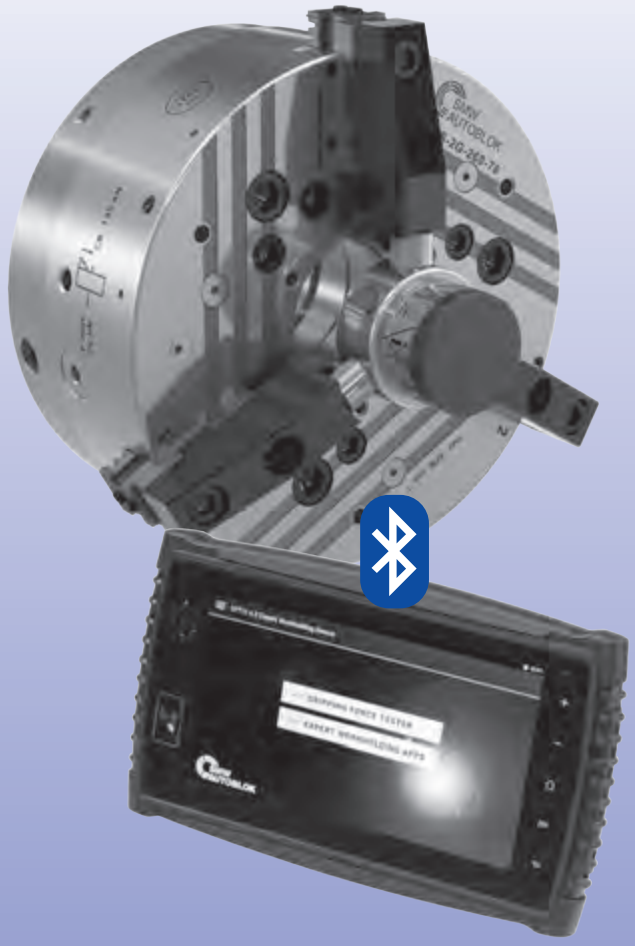

- **Wireless data transfer** from measuring head to table via Bluetooth for the measuring of dynamic and static clamping forces and speed (with included bracket)
- **Built-in camera** in tablet
- **Assistance systems**: Manuals, Jaw Finder, Chuck Finder, Technical calculations
- **Rechargeable battery**, operation time in use: 8h
- **Smart user interface**
- Tablet suitable for **industrial use** (Protection class IP 67)
- **Display** kN or lbf
- **Languages:** German, English, Italian, Spanish, Russian, Chinese and Japanese
- **Measured clamping forces can be evaluated** by the integrated software or by the display software on Laptop / PC
- **4 Measuring heads** for jaw chucks and **2 Measuring heads** for collet chucks

Gripping force tester – GFT-X 4.0 with measuring head

GFT-X 4.0

Expert Multi Device

Gripping Force Tester

- Technical data
- Ordering review

Standard equipment with GFT-X 4.0

Case with:
- Tablet 7" Multi Device
- Measuring head M3 (2 and 3 jaws) for jaw chucks with extensions and loading device
- Torx-key T15 and spare screws
- Bracket with magnet for measuring of speed
- Loading cable with USB port
- USB cable for Tablet
- Adapter for USA, UK and Southern Europe

Ordering data

GFT-X 4.0 case incl. Tablet, Measuring head M3 (2 and 3 jaws)	Id. No.	206844

Option:

Measuring head M1 (for collet chucks)	Id. No.	207257
Measuring head M2 (for collet chucks)	Id. No.	207258
Measuring head M3 (2 and 3 jaws)	Id. No.	207074
Measuring head M4 (2 and 3 jaws, high-precision)	Id. No.	207259
Measuring head M3 (6 jaws)	Id. No.	207586
Measuring head M4 (6 jaws, high-precision)	Id. No.	207587

Display software PC/ Laptop

- The data transfer is via an USB interface.
- The software can be run under all standard windows systems.

Input

- Automatic measuring of the data (gripping force - speed)
- The number of measuring steps can be programmed free.

Output

- Table gripping force / speed
- Diagram gripping force / speed

Input

Output

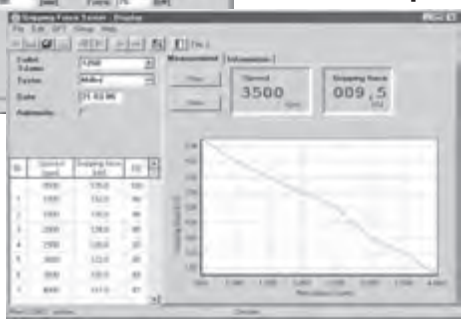

Technical data

Tablet	
Display/ Grip force F – speed	Display in kN/lbf - r.p.m
Data transfer	Bluetooth 4.0
Power supply/ Transformer	100/ 240 V AC, 50 to 60 Hz
Distance Tablet/ Measuring head	1-4 m (appr.)
Interface PC/ Laptop	USB 2.0
Operating temp.	0 to 40° (32°C-100 °F)
Protection class	IP 67

Warning: Machine door must be closed while measuring head is rotating!

Measuring heads				
	Measuring head M1	Measuring head M2	Measuring head M3	Measuring head M4
Application	collet Ø 18	collet Ø 42	chuck 2/3 or 2/3/6 jaws	
Clamping diameter	18 mm	42 mm	72 to 108 mm	72 to 108 mm
No. of jaws	collet 3 x slotted	collet 3 x slotted	2 and 3 jaws / 6 jaws	
Power supply	internal rechargeable capacitor			
Capacity of power supply	ca. 1.5 h at 50 % d.c.			
Data transfer	Bluetooth 4.0			
Range/gripping force F max.	0 to 75 kN	0 to 120 kN	0 to 180 kN (2-jaws) 0 to 270 kN (3/6-jaws)	0 to 30 kN (2-jaws) 0 to 45 kN (3/6-jaws)
Speed r.p.m	<10.000 r.p.m.	<8.000 r.p.m.	<6.000 r.p.m.	<6.000 r.p.m.
Accuracy (F/r.p.m)	<5 %/<1 % fsr	<5 %/<1 % fsr	<3 %/<1 % fsr	<1.5 %/<1 % fsr

Important for maintenance and safe operation, to be ordered with the chuck

Grease K05®

Special grease for manual and power chucks

Cartridge 14 Oz. (DIN 1284)
Grease content 500 g
Id. No. 016440

Can 1000 g
Id. No. 011881

- High adhesion
- High resistance against coolant
- High load bearing capacity
- Low friction coefficient
- High gripping force
- Avoids tribocorrosion

Grease K67®

Special grease for fully sealed chucks included in proofline® series

Cartridge 14 Oz. (DIN 1284)
Grease content 500 g
Id. No. 10731223

Can 1000 g
Id. No. 10731224

- For proofline chucks with permanent grease lubrication
- Basic components: mineral oils and lithium
- Without solvents

Grease gun

Grease gun (DIN 1283) for cartridges 14 Oz. (DIN 1284).
■ also refillable from grease can 1000 g.

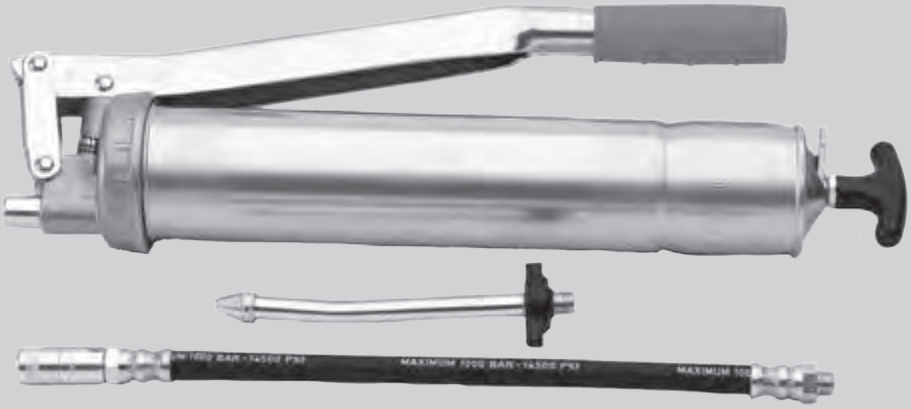

Greasing set Id. No. 083726
Supply range
- Grease gun
- 1 adapter flexible for high pressure grease fitting
- 1 adapter for cone grease fitting

Notes

Notes

Notes

Notes

Notes

SMW-AUTOBLOK Catalogs

The following SMW-AUTOBLOK catalogs are available:

- >> Turning catalog
- >> Stationary Workholding catalog
- >> Jaws catalog
- >> Grinding catalog
- >> OCTG catalog
- >> Steady Rests brochure
- >> Product Overview

Ask for our complete catalogs Turning and Stationary Workholding:

Download:
www.smw-autoblok.de

SMW-AUTOBLOK
Service Benefits

- **Service hotline**
  Hotline +49 (0) 7542 - 405 - 140
- **Worldwide**
  Service and support on site
- **Rapid task force**
  Global reach in less time,
  technical problem-solving skills
- **Repair**
  Quick Repair, express service on request
- **Original spare parts**
  Relevant spare parts are available from stock
- **Training**
  Individual training courses
- **Run-off**
  Run-off and support at the point of use
- **Maintenance**
  Scheduled maintenance, at SMW-AUTOBLOK or at the customer
- **Warranty**
  Warranty of 24 month on request

- **Contact**
  SMW-AUTOBLOK Serviceteam
  Tel.: +49 (0) 7542 - 405 - 140
  Fax: +49 (0) 7542 - 405 - 179
  E-mail: service@smw-autoblok.de

zertifiziert
DIN EN ISO 9001
certified

SMW-AUTOBLOK Spannsysteme GmbH
Postfach 1151 • D-88070 Meckenbeuren
Wiesentalstraße 28 • D-88074 Meckenbeuren
Tel. +49 (0) 7542 - 405 - 0
Vertrieb Inland: Fax +49 (0) 7542 - 3886
E-mail ➤ vertrieb@smw-autoblok.de
Sales International: Fax: +49 (0) 7542 - 405 - 181
E-mail ➤ sales@smw-autoblok.de

U.S.A.
SMW-AUTOBLOK Corporation
285 Egidi Drive - Wheeling, IL 60090
Tel. +1 847 - 215 - 0591
Fax +1 847 - 215 - 0594
E-mail ➤ autoblok@smwautoblok.com

Japan
SMW-AUTOBLOK Japan Inc.
1-56 Hira, Nishi-Ku
461-Nagoya
Tel. +81 (0) 52 - 504 - 0203
Fax +81 (0) 52 - 504 - 0205
E-mail ➤ japan@smwautoblok.co.jp

China
SMW-AUTOBLOK (Shanghai) Work Holding Co.,Ltd.
Building 6, No.72, JinWen Road, KongGang
Industrial Zone, ZhuQiao Town, Pudong District
201323, Shanghai P.R. China
Tel. +86 21 - 5810 - 6396
Fax +86 21 - 5810 - 6395
E-mail ➤ china@smwautoblok.cn

Mexico
SMW-AUTOBLOK Mexico, S.A. de C.V.
Pirineos No. 515-B, Nave 16
Col. Industrial Benito Juarez
Micro Parque Industrial Santiago
Queretaro, Qro. C.P. 76130
Tel. +52 (442) 209 - 5118
Fax +52 (442) 209 - 5121
E-mail ➤ smwmex@smwautoblok.mx

India
SMW-AUTOBLOK Workholding Pvt. Ltd.,
Plot No. 4, Weikfield Industrial Estate,
Gat No. 1251, Sanaswadi, Tal – Shirur,
Dist – Pune. 412 208
Tel. +91 2137 - 616 974
Fax +91 2137 - 616 972
E-mail ➤ info@smwautoblok.in

Brazil
SYSTEC METALÚRGICA LTDA
R. Luiz Brisque, 980
13280-000 - Vinhedo - SP
Tel. +55 (0) 193 886 - 6900
Fax +55 (0) 193 886 - 6970
E-mail ➤ systec@systecmetal.com.br

Argentina
SMW-AUTOBLOK Argentina
Rio Pilcomay 1121 - Bella Vista
RA - 1661 Bella Vista Buenos Aires
Tel. +54 (0) 1146 - 660 603
Fax +54 (0) 1146 - 660 603
E-mail ➤ autoblok@ciudad.com.ar

www.smw-autoblok.de

AUTOBLOK s.p.a.
Via Duca D'Aosta n.24
Fraz.Novaretto
I-10040 Caprie - Torino
Tel. +39 011 - 9638411
Tel. +39 011 - 9632020
Fax +39 011 - 9632288
E-mail ➤ info@smwautoblok.it

France
SMW-AUTOBLOK
17, Avenue des Frères Montgolfier - Z.I Mi-Plaine
F-69680 Chassieu
Tel. +33 (0) 4 - 727 - 918 18
Fax +33 (0) 4 - 727 - 918 19
E-mail ➤ autoblok@smwautoblok.fr

Great Britain
SMW-AUTOBLOK Telbrook Ltd.
7 Wilford Industrial Estate
Ruddington Lane, Wilford
GB-Nottingham, NG11 7EP
Tel. +44 (0) 115 - 982 1133
E-mail ➤ info@smw-autoblok-telbrook.co.uk

Spain
SMW-AUTOBLOK IBERICA, S.L.
Ursalto 10 - Nave 2, Pol. 27 - Mateo Gaina
20014 San Sebastián (Guipúzcoa) (Spain)
Tel. +34 943 - 225 079
Fax +34 943 - 225 074
E-mail ➤ info@smwautoblok.es

Russia
SMW-AUTOBLOK Russia
B.Tulskaya str., 10, bld.3, off. 323,
115191 Moscow (Russia)
Tel. +7 495 -231-1011
Fax +7 495 -231-1011
E-mail ➤ info@smw-autoblok.ru

Taiwan
AUTOBLOK Company Ltd.
NO.6, SHUYI RD., SOUTH DIST.,
TAICHUNG, TAIWAN
Tel. +886 4-226 10826
Fax +886 4-226 12109
E-mail ➤ taiwan@smwautoblok.tw

Czech Republic / Slovakia
SMW-AUTOBLOK s.r.o.
Merhautova 20
CZ - 613 00 BRNO
Tel. +420 513 034 157
Fax +420 513 034 158
E-mail ➤ info@smw-autoblok.cz

Sweden / Norway
SMW-AUTOBLOK Scandinavia AB
Kasernvägen 2
SE - 281 35 Hässleholm
Tel. +46 (0) 761 420 111
E-mail ➤ info@smw-autoblok.se

Korea
SMW-AUTOBLOK KOREA CO., LTD.
1108 ho, Baeksang Startower 1st,
65, Digital-ro 9-gil, Geumcheon-gu
Seoul, ROK-08511, Korea
Tel. +82 2 6267 9505
Fax +82 2 6267 9507
E-mail ➤ info-korea@smw-autoblok.net

Subjected to technical changes and mistakes.